City of Alameda
Amended and Restated
Objective Design Review Standards

Adopted by Planning Board Resolution No. PB-21-01 on February 22, 2021

TABLE OF CONTENTS

INTRODUCTION 1
PURPOSE 1
APPLICABILITY 1
Ministerial Design Review 1
Discretionary Design Review 1
RELATIONSHIP TO OTHER REGULATIONS 2
DOCUMENT ORGANIZATION 2
DESIGN PRINCIPLES AND STANDARDS 2
Site Design 2
Building Mass and Articulation 4
Building Orientation and Entries 6
Architectural Design, Details, and Materials 7
Mixed-Use Development 11
Neighborhood Context 14
APPENDIX A: MAP OF TRADITIONAL DESIGN AREA 23
APPENDIX B: WORKSHEET – INVENTORY OF ARCHITECTURAL FEATURES 24
APPENDIX C: ARCHITECTURAL STYLE GUIDES 27

INTRODUCTION

PURPOSE

The Amended and Restated Objective Design Review Standards (Objective Design Review Standards) serve as minimum architectural and site design requirements intended primarily for housing development projects (i.e., uses consisting of any of the following: residential units only, mixed-use development consisting of residential and nonresidential uses where at least two-thirds of the square footage is designated for residential use, and transitional or supportive housing).

The Objective Design Review Standards supplement the development standards of the Zoning Ordinance and further the goals, policies, and actions of the Alameda General Plan, which encourages high-quality design and the quality of life that an enhanced built environment fosters.

APPLICABILITY

The Objective Design Review Standards apply to housing development projects, including the following:

- Affordable housing projects eligible for streamlined ministerial review pursuant to SB 35 (Section 65913.4 of the Government Code).
- "Housing development projects" as defined by the Housing Accountability Act (Section 65589.5 of the Government Code), which means uses consisting of any of the following:
  - Residential units only;
  - Mixed-use developments consisting of residential and nonresidential uses with at least two-thirds of the square footage designated for residential use; or
  - Transitional housing or supportive housing.
- Any other housing projects that current or future State law provides may only be reviewed against objective standards.

The Objective Design Review Standards were adopted by the Planning Board on February 22, 2021 and supersede the initial set of Objective Design Review Standards adopted by Planning Board Resolution No. PB-20-04 on February 10, 2020. The revised standards will go into effect as of the date of adoption.

Ministerial Design Review

Where California law requires that the design of a project be reviewed only against objective standards, the Objective Design Review Standards will serve as the standards for design review. Ministerial design review will be processed by Planning staff per the Design Review Procedure set forth in AMC Section 30-36.

Discretionary Design Review

If a project that would be eligible for ministerial design review does not meet one or more of the Objective Design Review Standards, and the applicant wishes to propose an alternative design, the applicant may elect to go through the discretionary design review process described in Section 30-36, Design Review Procedure, of the Alameda Municipal Code (AMC). In such case, the project will be reviewed for conformance with the Citywide Design Review Manual and any other design guidelines that apply to the site. Discretionary design review may only be approved if the findings for design review approval of Section 30-37.5, Findings, of the AMC are made.

RELATIONSHIP TO OTHER REGULATIONS

All development must comply with the standards of Alameda Municipal Code Chapter XXX, Development Regulations (the Zoning Ordinance). Accordingly, projects subject to these Objective Design Review Standards must also comply with the Zoning Ordinance.

DOCUMENT ORGANIZATION

This document is organized into six topic areas related to site and architectural design. Each section includes statements of design principles, followed by specific standards related to the principles. **The principles are provided for orientation and reference only; they are not criteria for review. By contrast, the standards are requirements that must be met.**

DESIGN PRINCIPLES AND STANDARDS

1. SITE DESIGN

Principles

Vehicle access and parking do not dominate street frontages. Instead, they are subordinate in location and appearance to other site elements such as buildings, pedestrian facilities, landscaping, and yards.

Children's play areas are designed with adequate facilities and protection. Residential projects are designed to provide visibility into children's play areas.

Appropriate landscaping enhances the built environment and provides environmental benefits.

Standards—Site Design	Project Complies		
	Yes	No	N/A
1A. No Gates/Barriers. Public and private streets into new developments shall not be gated or otherwise closed off to vehicles.	☐	☐	☐
1B. Parking Location. 1. ***Surface Parking and Carports.*** Surface parking areas and carports must be located behind or to the side of residential buildings. They may not be located between the front façade of any building and a street. For purposes of this regulation, the front façade shall mean the building elevation that faces the front yard as defined by the Alameda Municipal Code (AMC).	☐	☐	☐
2. ***Garages.*** a. *Parking Entry Location*. If a project site fronts on two or more streets, vehicle entries to parking garages shall be located on a secondary street.	☐	☐	☐
b. *Street-facing Garages*. Any garage door facing and visible from a primary street[1] shall meet the following standards:	☐	☐	☐

[1] **Primary and Secondary Streets.** For lots with frontage along more than one street (e.g., corner lots, through lots), the primary street will be considered the street abutting the "front yard," as defined in AMC Section 30-2. The other street shall be considered the secondary street. However, Park and Webster streets will always serve as primary streets, regardless of the location of the subject property's front yard.

Standards—Site Design	Project Complies		
	Yes	No	N/A
i. Width. Garage doors shall not occupy more than 50% of the width of any building façade. This limitation does not apply to detached garages located in the rear half of a lot.	☐	☐	☐
ii. Recess. Garage doors shall be recessed at least six inches from the surrounding wall surface.	☐	☐	☐
c. *Rear and Side Garages*. Garage doors located on side or rear façades shall be no wider than two cars' width, or a maximum of 18 feet.	☐	☐	☐
1C. Landscaping. 1. ***Landscaping of Street-facing Yards.*** In accord with Section 30-5.7 of the AMC, front yards and corner side yards shall be landscaped, except for areas used for walkways, driveways, and staircases. (*For treatment of required yards for mixed-use development, see Section 5, Mixed-Use Development, of these standards.*)	☐	☐	☐
2. ***Materials.*** a. *Bay Friendly and WELO Compliance*. Planting may consist of any combination of groundcovers, shrubs, vines, and trees that meets the Bay Friendly and Water Efficient Landscape Ordinance (Article IV of Chapter XXX of the AMC).	☐	☐	
b. *Components.* i. Live Plant Materials. At least 50% of any required landscaped area must include live plant materials rather than be occupied by gravel, cinder, paving stones, or similar non-plant materials. ii. Features. Benches, fountains, sculptures, or other ornamental features may be included within and counted as part of landscaped areas.	☐	☐	
3. ***Trees.*** a. *Street Trees*. Street trees shall be provided according to the recommendations for species, sizes, and spacing in the City of Alameda Master Tree Plan.	☐	☐	
b. *Prohibited Species.* Palm trees are not permitted unless the City's solid waste program accepts palm fronds for composting.	☐	☐	
1D. Design of Children's Play Areas. If open space on a project site includes children's play areas, such areas shall be designed to meet the following standards: 1. ***Equipment.*** Play areas shall include equipment for children under the age of five.	☐	☐	☐
2. ***Protection.*** Play areas shall be protected from any adjacent streets or parking lots with a fence or other barrier at least four feet in height.	☐	☐	☐
3. ***Visibility.*** Any dwelling unit abutting the open space containing the play area shall include at least one window located to overlook the open space area.	☐	☐	☐
4. ***Facilities for Adults.*** Benches or picnic tables shall be provided for adults who are supervising children.	☐	☐	☐

Corresponding existing design guidelines and policies on parking location and access:

- *Northern Waterfront General Plan Amendment Policy 10.6.v;*
- *Citywide Design Review Manual policies on auto access in 2.2.A Commercial Block, 2.2.B Workplace Commercial, 2.2.C Parking Structure, 2.2.E Stacked Flats, 2.2.F Multiplex, 2.2.G Rowhouse, and 2.2.H Courtyard Housing;*
- *Guide to Residential Design, New Construction, Garages.*

Corresponding existing design guidelines on landscaping and use of setbacks:

- *Citywide Design Review Manual policies on landscape and open space in 5.2 Setback Areas and 5.3 Plant Materials.*

2. BUILDING MASS AND ARTICULATION

Principles

Provide façade articulation or significant architectural details in order to create visual interest. Avoid buildings with a bulky or monolithic appearance.

To create articulation, building facades can be varied in depth through a pattern of offsets, recesses, or projections. Façade articulation elements should be in proportion to building mass. Create buildings that are well proportioned, elegant, cohesive, and harmonious with their surroundings.

Incorporate features that generate interest at the pedestrian level. Avoid blank walls and dull facades that create an uninviting pedestrian environment.

Utilize windows and other transparent openings to provide sufficient light for occupants and create a sense of interaction between residential uses and the public realm.

Standards—Building Mass and Articulation	Project Complies		
	Yes	No	N/A
2A. Façade Articulation. All building facades that face or will be visible from a public street shall be articulated by including features that meet **at least two** of the following standards:	*Projects must meet two or more of the following:*		
1. At least 25% of the area of the façade is offset (through recesses or projections) at a depth of at least two feet from the remainder of the façade.	☐	☐	
2. For every 50 horizontal feet of wall, facades include at least one projection or recess at least four feet in depth, or two projections or recesses at least two feet in depth. If located on a building with two or more stories, the articulated elements must be greater than one story in height.	☐	☐	
3. For every 50 feet of horizontal building wall, there is a vertical feature such as a pilaster at least 12 inches in both width and depth and extending the full height of the building.	☐	☐	
4. Windows are recessed at least four inches from surrounding exterior wall surfaces, measured from window frame to finished exterior wall.	☐	☐	
5. The ground level of the building is distinguished from upper levels through a material such as stone, concrete masonry, or other material that is distinct from the remainder of the façade, along with a change in plane at least one inch in depth at the transition between the two materials.	☐	☐	

Standards—Building Mass and Articulation	Project Complies		
	Yes	No	N/A
6. The top floor of the building is distinguished from lower levels by a change in façade materials, along with a change in plane at least one inch in depth at the transition between the two materials.	☐	☐	
7. The building includes a horizontal design feature such as a water table, belt course, or bellyband, applied to the transition between the ground floor and upper floors.	☐	☐	
8. Cornices or similar moldings and caps are provided at the top of building facades.	☐	☐	
2B. Limitation on Blank Walls. 1. ***Ground-Floor Features.*** Any wall (including the wall of a parking structure) that faces a public street, public sidewalk, public pedestrian walkway, or publicly accessible outdoor space shall include **at least one of the following features** on the ground floor. No wall may run in a continuous plane of more than 15 feet on the ground floor without at least one of the following features.	*Projects must include one or more of the following three features:*		
a. A transparent window or door that provides views into building interiors, or into window displays at least five feet deep.	☐	☐	
b. Decorative features and artwork, including but not limited to decorative ironwork and grilles, decorative panels, mosaics, or relief sculptures.	☐	☐	
c. A permanent vertical trellis with climbing plants or plant materials.	☐	☐	
2. ***Minimum Transparency.*** At least 30 percent of the area of each street-facing facade must consist of windows or other transparent openings. This requirement applies to portions of buildings backed by residential uses. *(For ground-floor transparency requirements for commercial portions of mixed-use development, see Section 5, Mixed-Use Development.)*	☐	☐	☐

Corresponding existing design guidelines and policies on building mass and articulation:

- *Alameda Point Town and Waterfront Precise Plan, guidelines on bulk, massing, and façade and entry design;*
- *Citywide Design Review Manual guidelines on building articulation in 2.2.A Commercial Block, 2.2.B Workplace Commercial, 2.2.E Stacked Flats, 2.2.F Multiplex, 2.2.G Rowhouse, 2.2.H Courtyard Housing, and 4.2.3 Building Articulation.*

3. BUILDING ORIENTATION AND ENTRIES

Principles

Orient buildings to face streets and open space in order to create a sense of interaction between residential uses and the public realm.

Include prominent building entries that contribute to visual interest and are welcoming and pedestrian friendly. Facilitate pedestrian access to buildings by providing direct connections to primary entrances.

Avoid visually unappealing "motel-style" balcony entrances.

Standards—Building Orientation and Entries	Project Complies		
	Yes	No	N/A
3A. Main Entry Orientation. Building entrances shall be oriented to face the street, according to the following standards. **1. *Entry Location for Different Types of Sites.*** a. If a project site has frontage on only one street, the main building entry shall face the street.	☐	☐	☐
b. If a project site fronts on two or more streets, the main building entry shall:	*Meet one of the following two:*		
i. Face the corner; or	☐	☐	☐
ii. Face the primary street.[2]	☐	☐	☐
c. In courtyard-style developments in which residential buildings are located in the interior of a block, entries may face interior courtyards, common open space, walkways, and paseos. However, those buildings and units that are adjacent to or closest to a street shall have a main entry facing the street.	☐	☐	☐
d. In mixed-use buildings with ground-floor commercial space, the main entry to the commercial space must face a street. The entries to residential units are not required to face the street and instead may be located on a side or rear façade.	☐	☐	☐
2. *Qualifying Entries (Doors and Porches).* In order to be considered to "face" a street, a main building entry shall consist of a door that either:	*Meet one of the following two:*		
a. Faces the street; or	☐	☐	
b. Opens onto a porch with an entrance that faces the street. The porch shall meet the minimum area specified in 3B below.	☐	☐	
3. *Pedestrian Access.* Direct pedestrian access shall be provided between the public sidewalk and the main building entry.	☐	☐	

[2] The primary street will be considered the street abutting the "front yard," as defined in AMC Section 30-2. The other street shall be considered the secondary street. However, Park and Webster streets will always serve as primary streets, regardless of the location of the subject property's front yard.

Standards—Building Orientation and Entries	Project Complies		
	Yes	No	N/A
3B. Entry Configuration, Area, and Cover. Building entries shall be configured according to **one of the following options**:	*Project must meet one of the following three:*		
1. A shared entry door (serving multiple units) located at the ground floor of the building that has a roofed projection or recess with a minimum depth of five feet and a minimum area of 60 square feet.	☐	☐	
2. Individual entry doors (serving individual ground-floor units) located at the ground floor of the building that have roofed projections or recesses with a minimum depth of at least five feet and a minimum area of 25 feet.	☐	☐	
3. Individual entry doors to individual upper-floor units only if such entrances are not located on street-facing facades or visible from public streets.	☐	☐	
3C. Exterior Access Limitations.			
1. Unenclosed stairways serving upper floors are not permitted on street-facing facades.	☐	☐	
2. Exterior access corridors (motel-style balconies) located above the ground floor and serving two or more units are not permitted on street-facing building elevations. They are permitted on interior side elevations but must be set back at least 15 feet from street-facing elevations.	☐	☐	

Corresponding existing design guidelines and policies on building mass and articulation:

- *Alameda Point Town and Waterfront Precise Plan, guidelines on bulk, massing, and façade and entry design;*
- *Citywide Design Review Manual guidelines on building articulation in 2.2.A Commercial Block, 2.2.B Workplace Commercial, 2.2.E Stacked Flats, 2.2.F Multiplex, 2.2.G Rowhouse, 2.2.H Courtyard Housing, and 4.2.3 Building Articulation.*

4. ARCHITECTURAL DESIGN, DETAILS, AND MATERIALS

Principles

Incorporate architectural details in order to create visual interest and avoid flat or monolithic-looking facades.

Create shadow lines around windows.

Provide exterior materials that enhance architectural character and quality.

Minimize visual clutter by locating mechanical and electrical equipment away from public view, coordinating and integrating such equipment into the design of buildings, or screening it with materials that match building exteriors.

Standards—Architectural Design, Details, and Materials	Project Complies		
	Yes	No	N/A
4A. Equivalent Facade Treatment. Buildings shall carry the same theme on all street-facing elevations, as well as on the first 10 feet of non-street-facing elevations closest to the street. For the purpose of this standard, a theme includes primary (non-accent) materials and colors.	☐	☐	☐
4B. Siding Materials. 1. ***Prohibited Materials***. The following shall not be used as siding materials:	*Checking "yes" for 1a – 1c indicates that prohibited material is **not** used.*		
a. Vinyl (plastic) siding.	☐	☐	
b. Aluminum siding.	☐	☐	
c. T1-11 wood siding.	☐	☐	
2. ***Specific Requirements for Certain Materials***. a. *Exposed Wood.* If exposed wood (other than wood shingles) is used, it shall be painted, stained, or treated and maintained to prevent noticeable weathering.	☐	☐	☐
b. *Thin Brick Veneers.* Thin brick veneers, where used, shall be selected to give the appearance of full brick. Wrap-around pieces shall be used at window recesses and building corners.	☐	☐	☐
c. *Fiber Cement and Other Synthetic Siding.* Synthetic siding shall have smooth textures. Simulated wood grain textures shall not be used.	☐	☐	☐
4C. Window Details. 1. ***Window Recess***. Windows must be recessed at least two inches from the surrounding wall, measured from the face of the finished exterior wall or trim to the window frame. Where trim is used to meet the recess requirement, it shall be at least two inches wide. This requirement applies on all sides of a window, not just on the top and bottom. a. *Exception.* Windows located in a section of wall that is recessed at least one foot from the remainder of the building façade need not be recessed from the wall in which they are located.	☐	☐	☐

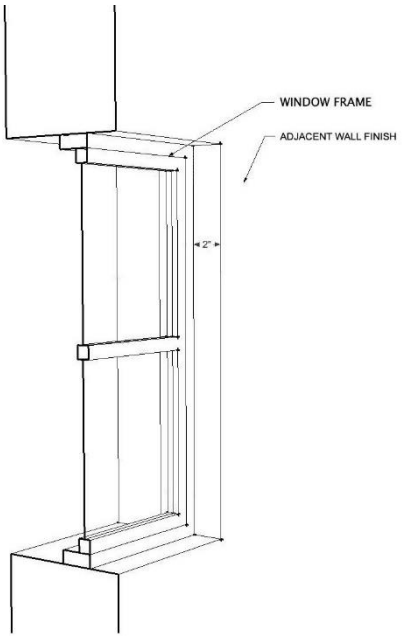

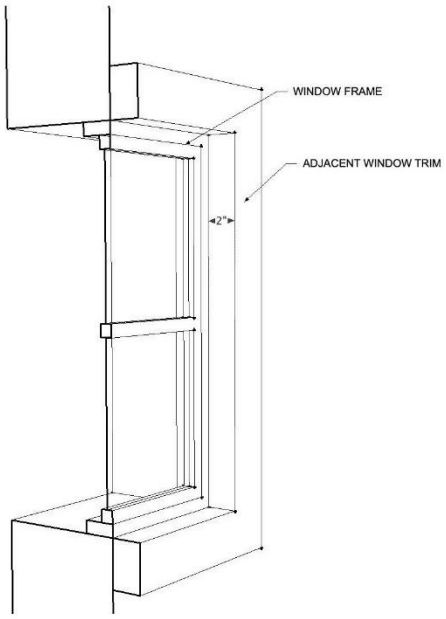

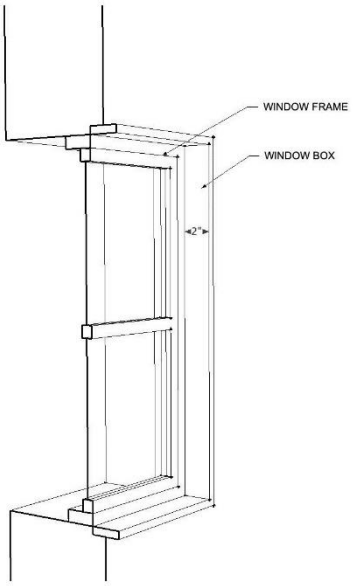

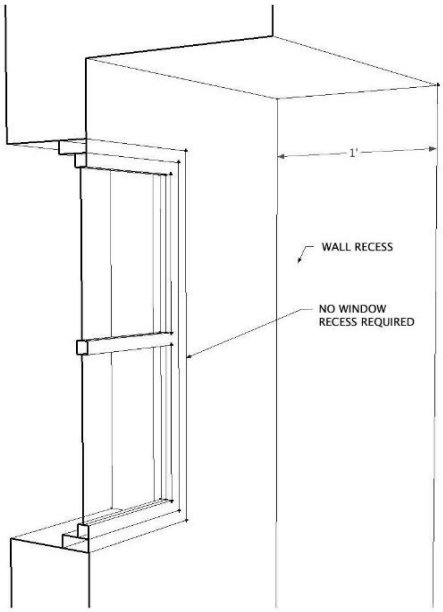

Illustrations by Teresa Ruiz

Standards—Architectural Design, Details, and Materials	Project Complies		
	Yes	No	N/A
2. ***Divided Lites/Muntins***. Divided-lite windows, where utilized, may consist of true/full divided lites or simulated divided lites, in accord with the following standards: a. Muntins or grids shall project at least three-eighths (3/8) of an inch from the exterior glass surface.	☐	☐	☐
b. For simulated divided lites, spacers shall be used between panes.	☐	☐	☐
c. Sandwich muntins, where muntin material is located between two panes of glass, but not on the exterior or interior of the window, are prohibited.	☐	☐	☐
d. Roll-on or tape muntins are prohibited.	☐	☐	☐
4D. Equipment Screening. All exterior mechanical and electrical equipment shall be screened or incorporated into the design of buildings according to the following standards. 1. Ground-floor mechanical equipment shall be screened with landscaping or with screening materials that match the exterior materials, textures, and colors of the building(s) on the site.	☐	☐	☐
2. Window-mounted air conditioning units shall not be visible on the primary building façade.	☐	☐	☐
3. Roof-mounted equipment shall be:	*Meet one or more of the following:*		
a. Located so as not to be visible from any adjacent street, which shall mean not visible from the sidewalk level of the opposite side of any street fronting the site;	☐	☐	☐
b. Located at least five feet from the edge of any roof of a street-facing building façade; or	☐	☐	☐
c. Screened with a device that matches the color and texture of the building exterior.	☐	☐	☐

Corresponding existing design guidelines and policies on building mass and articulation:

- *Alameda Point Town and Waterfront Precise Plan, guidelines on bulk, massing, and façade and entry design;*
- *Citywide Design Review Manual guidelines on building articulation in 2.2.A Commercial Block, 2.2.B Workplace Commercial, 2.2.E Stacked Flats, 2.2.F Multiplex, 2.2.G Rowhouse, 2.2.H Courtyard Housing, and 4.2.3 Building Articulation.*
- *Citywide Design Review Manual 4.2.12, Mechanical Equipment and Screening.*

5. MIXED-USE DEVELOPMENT

Principles

Create pedestrian interest, orientation, and access at the ground floor of mixed-use buildings.

Ensure that development in Alameda's traditional business districts is compatible with the character of those districts by applying special standards within the "Traditional Design Area."

Standards—Mixed-Use Development, Citywide	Project Complies		
	Yes	No	N/A
5A. Applicability. In addition to meeting the other Objective Design Review Standards, mixed-use buildings with ground-floor commercial uses located anywhere in the city shall meet the standards of Sections 5B through 5E. *Is the project a mixed-use development? ☐ Yes ☐ No* *If "no," Section 5 does not apply. Skip to Section 6.*			
5B. Ground-floor Height. The ground floor shall be at least 14 feet in height, measured from floor to ceiling.	☐	☐	
5C. Ground-floor Transparency. The ground floor of exterior walls facing a street shall meet the following standards: 1. Windows, doors, or other openings shall constitute at least 75 percent of the ground-floor building wall area. Openings fulfilling this requirement shall have transparent glazing (not tinted glass, or reflective film or coating) and shall provide views into window displays at least five feet deep or into sales areas, lobbies, work areas, or similar active commercial spaces.	☐	☐	
2. No ground-floor exterior wall may run in a continuous plane for more than 15 feet without such an opening.	☐	☐	
5D. Vertical Articulation. 1. ***Ground-Floor Distinction***. The ground floor of any building that has two or more stories must be distinguished from upper floors by incorporating **at least one** of the following elements:	*Projects must include one or more of the following three:*		
a. Larger storefront windows on the ground floor and smaller "punch out" windows on upper floors;	☐	☐	
b. A material distinct from the remainder of the façade, along with a change in plane of at least one inch from the wall surface of the remainder of the building; or	☐	☐	
c. A horizontal design feature such as a water table, belt course, or bellyband applied to the transition between the ground floor and upper floors.	☐	☐	
5E. Treatment of Street-facing Yards. If buildings are set back from property lines, front yards and corner side yards shall be designed as follows. 1. ***Surface.*** Street-facing yards may be hardscaped and/or landscaped. Any hardscaped areas shall be set with decorative paving materials such as concrete pavers, bricks, or colored concrete.	☐	☐	☐
2. ***Use.*** Street-facing yards shall be designed for pedestrian uses, including but not limited to outdoor dining, the display of retail goods, and public seating.	☐	☐	☐

Standards—Mixed-Use Development, Traditional Design Area	Project Complies		
	Yes	No	N/A
5F. Applicability. Standards 5G to 5K below apply to mixed-use buildings with ground-floor commercial space on any site located partially or entirely within the Traditional Design Area shown on the map in Appendix A. These standards apply in addition to the other Objective Design Review Standards and the citywide standards for mixed-use development in Sections 5B through 5E above. *Is the project site located within the Traditional Design Area, as shown on the map in Appendix A? ☐ Yes ☐ No* *If "no," Sections 5G through 5L below do not apply. Skip to Section 6.*			
5G. Entry Area and Cover. Pedestrian entries to ground-floor and upper-floor commercial uses shall meet **all** of the following standards: 1. Entrances shall be recessed in a vestibule two to five feet in depth.	☐	☐	
2. Entrances shall be covered by a roof, portico, or other architectural projection that provides weather protection.	☐	☐	
3. The floors of exterior entry vestibules shall be paved with tile, stone, or other hard-surface material distinct from the adjacent sidewalk. This standard may also be met by scoring concrete and using integrated color. Where recessed (inlaid) walk-off mats are used, this standard applies only to the area outside the walk-off mat.	☐	☐	
5H. Transom Windows. If transom windows are provided, they shall be located within at least the top 18 inches of any storefront bay.	☐	☐	☐
5I. Transparency. In addition to meeting the transparency requirement for the ground-floor façade area in Section 5C, mixed-use projects within the Traditional Design Area shall also meet the following standards: 1. ***Entry Doors.*** At least 50% of the area of entry doors to commercial spaces shall consist of transparent glazing.	☐	☐	☐
2. ***Entry Bays.*** At least 80% of the surface of each storefront bay shall consist of display windows, doors, transom windows, and other openings with transparent glazing.	☐	☐	☐
5J. Vertical Articulation. 1. ***Ground-Floor Distinction.*** The ground floor of any multi-story building must be distinguished from upper floors by incorporating **all** of the following elements: a. Larger storefront windows on the ground floor and smaller "punch out" windows on upper floors;	☐	☐	
b. A material distinct from the remainder of the façade; and	☐	☐	
c. A horizontal design feature such as a water table, belt course, or bellyband applied to the transition between the ground floor and upper floors.	☐	☐	

Standards—Mixed-Use Development, Traditional Design Area	Project Complies		
	Yes	No	N/A
2. ***Roof Treatment.*** The tops of buildings shall be articulated by incorporating a cornice, parapet, or eave that extends across the width of the building.	☐	☐	
5K. Bulkheads/Base Treatment.			
1. ***Base Treatment.*** Storefront windows shall be supported by **one** of the following bases:	*Include one of the following two:*		
a. Bulkheads at least 18 inches in height and no more than 24 inches in height, measured from the adjacent sidewalk.	☐	☐	
b. A base treatment (bottom frame element) at least four inches in height is allowed if such treatment is exhibited by other storefronts on the same block.	☐	☐	
2. ***Bulkhead Materials.***			
a. *Allowed Materials.* Allowed materials for bulkheads include glazed tile, polished marble, granite or other stone slabs, wood panels, and pressed brick.	☐	☐	☐
b. *Prohibited Materials.* The following materials are not allowed for bulkheads: stucco; wood shingles; board-and-batten siding; rustic materials such as rough-sawn wood, rough stone, or common brick; recessed metal panels; and synthetic materials such as vinyl or cultured stone.	☐	☐	☐
c. *Requirements for Certain Materials.* For tile, stone, or brick bulkheads:	☐	☐	☐
i. The storefront windows shall be set at or within one inch of the face of the bulkhead; or	☐	☐	☐
ii. The bulkhead materials shall be incorporated into the sill detailing.	☐	☐	☐

Corresponding existing design policies and guidelines:

- *Citywide Design Review Manual 2.2.A, Commercial Block, 2.2.B, Workplace Commercial, 3.2.A Storefront, 3.2.C Formal Entry, 4.2.4, Materials, 4.2.6 Windows, and 4.2.8 Building Entries.*
- *Webster Street Design Manual, Façade Composition guidelines 1.6 and 1.7; Articulate Corner Locations guideline 1.9; Entry guidelines 6.4 and 6.5; Window guidelines 6.8, 6.9, 6.11, 6.13, Bulkheads guidelines 6.15, 6.17, 6.18.*
- *Alameda Point Town and Waterfront Precise Plan, Building Design, Fenestration and Transparency.*

6. NEIGHBORHOOD CONTEXT

Principles

New development within older neighborhoods reflects the architectural context by incorporating forms and features from existing buildings in the immediate area.

Applicability

6A. Applicability. The standards of this section ("neighborhood context standards") apply to projects on sites located partially or entirely within the Traditional Design Area shown on the map in Appendix A. For sites within the Traditional Design Area, the requirements of this section are in addition to the other Objective Design Review Standards.

Is the project site located within the Traditional Design Area?

☐ Yes ☐ No

If "no," the standards of this section do not apply.

Context Area

6B. Context Area Defined.

1. ***Interior Lots***.
   a. The "context area" for an interior lot encompasses:
      i. Five lots or 250 feet (measured from the subject property's side lot lines), whichever is less, on each side of the subject property on the same side of the street.
      ii. Any lots directly across the street from the subject property, which shall mean any lots intersected by an extension of the subject property's side lot lines to the opposite side of the street; and
      iii. Five lots, or 250 feet, whichever is less, on each side of the subject property on the opposite side of the street, measured from the extension of the subject property's side lot lines.
   b. Additional Rules.
      i. If any portion of a lot falls within 250 feet of the subject property, the lot shall be included within the context area.
      ii. Where there are fewer than five lots between the subject property and an intervening street, lots from the next block will be considered part of the context area if they fall within 250 feet from the subject property.
      iii. Lots that are within 250 feet of the subject property but do not lie along the same street frontage, such as lots to the rear of the subject property, are not included in the context area.

CONTEXT AREA FOR AN INTERIOR LOT

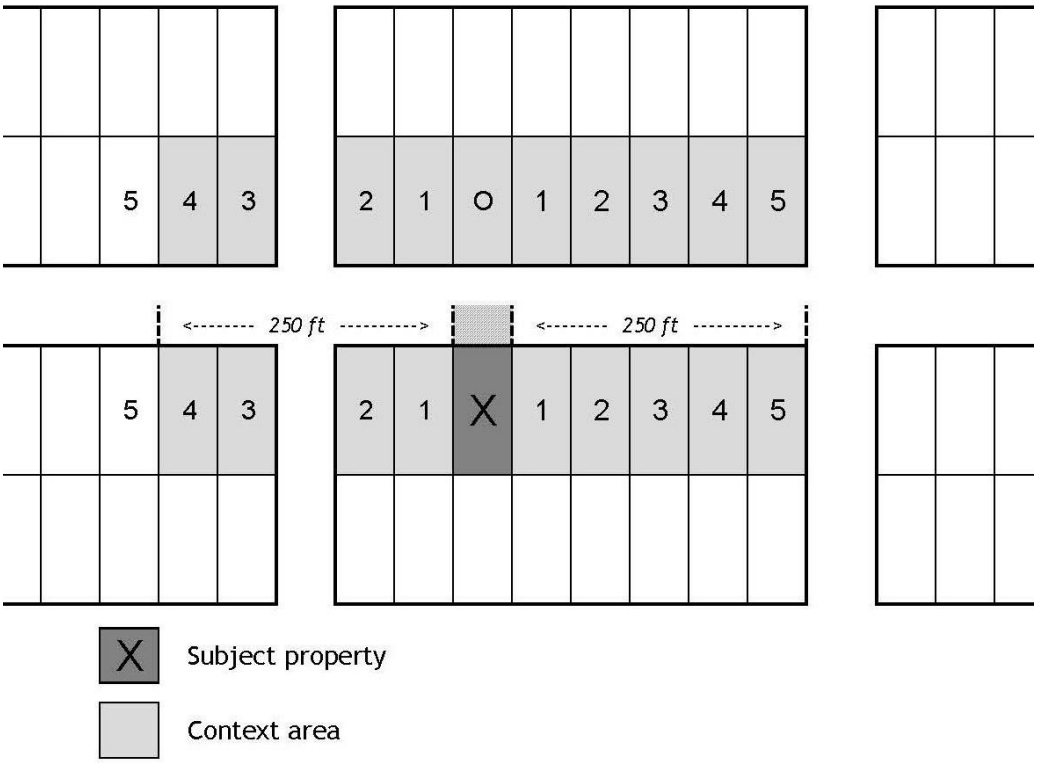

2. ***Corner Lots.*** The "context area" for a corner lot encompasses:
   a. Along the primary street, five lots, or 250 feet (measured from the subject property's property lines), whichever is less, on each side of the subject property, both on the same side of the street and across the street.
   b. Along the secondary street, 250 feet (measured from the subject property's property lines), or the end of the block, whichever comes first, on each side of the subject property, both on the same side of the street and across the street.
   c. All properties that front the same intersection as the subject property.

CONTEXT AREA FOR CORNER LOT

3. ***Whole-block Properties.*** The "context area" for a property that occupies a whole block or block face encompasses:

a. All lots across the street from each side of the subject property; and

b. All lots that front the same intersections as the subject property.

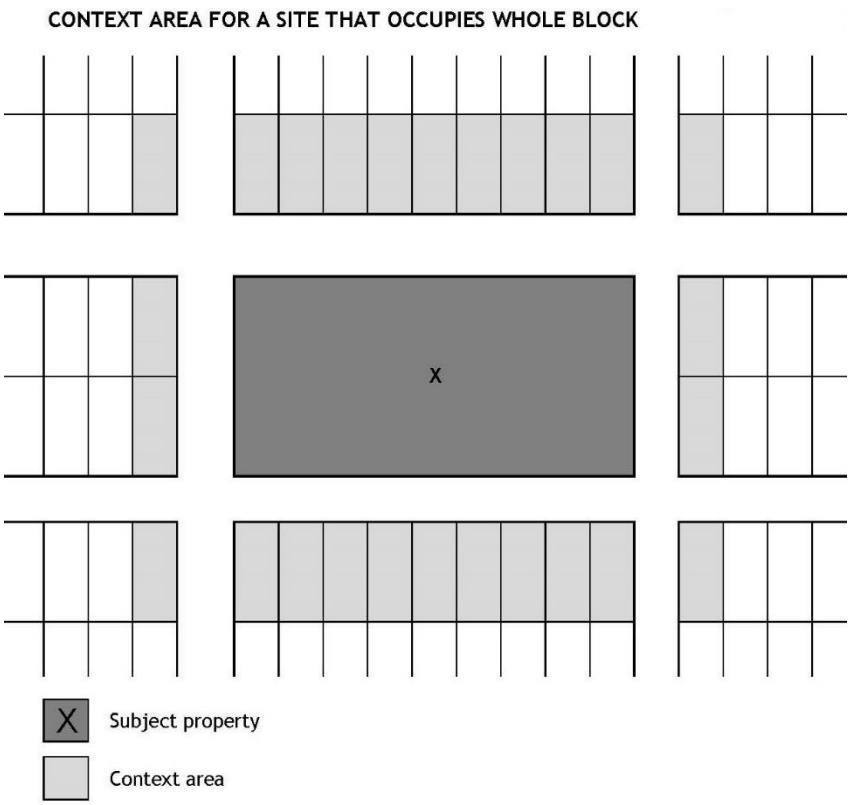

Reference Buildings and Features

6C. Selecting Reference Buildings or Reference Features—Options. A project applicant shall identify existing buildings within the context area that were constructed prior to 1942 and identify one or more of them to serve as "reference buildings" for the purpose of meeting the Neighborhood Context Standards. Alternatively, an applicant may inventory the individual features of all pre-1942 buildings within the context area, as described in Option 4 below. The options for selecting reference buildings or reference features for the purpose of meeting the neighborhood context standards are as follows:

Check the option selected (1, 2, 3, or 4):

1. ***Historic Buildings.*** If an Alameda Historic Monument or a property designated "N" or "S" in the Historical Building Study List is located within the context area, then such building may serve as the reference building. ☐
2. ***Predominant Architectural Style.*** If there is a predominant architectural style[3] within the context area, the buildings of that style may serve as the reference buildings. A predominant architectural style is either: ☐
   a. A style exhibited by at least 40% of the buildings within the context area. If two architectural styles are represented by 40% or more of buildings in the context area, then the applicant may choose either style to serve as the predominant architectural style.
   b. A style exhibited by buildings of the same architectural style on three or more adjacent lots anywhere within the context area. For the purpose of this criterion, lots will be considered adjacent even if separated by a street.
3. ***Adjacent Buildings.*** If buildings on lots adjacent to the subject property were constructed prior to 1942 and retain their original architectural features, then the adjacent buildings may serve as the reference buildings. ☐
   a. In the case of an interior lot, the pre-1942 buildings on each side of the subject property shall serve as the reference buildings.
   b. In the case of a corner lot, the reference buildings may consist of pre-1942 buildings located on:
      i. Properties adjacent to the subject property; or
      ii. Any corner of the same intersection as the subject property.
4. ***Architectural Features.*** Instead of identifying a reference building, the applicant may inventory features of all pre-1942 buildings within the context area and incorporate the most prevalent features into the design of the project, as further described in Section 6D below. *Note: Appendix B provides an optional worksheet for project applicants to use to inventory architectural elements within the context area.* ☐

[3] The identification of architectural style shall be according to the characteristics listed in the Guide to Residential Design, the booklet titled "Architectural and Historical Resources of the City of Alameda," or Section 4.3 of the Citywide Design Review Manual. See Appendix C.

Check the option selected (1 or 2):

6D. Incorporating Forms and Features—Options. New buildings shall be designed to:

1. Incorporate forms and features of the reference building(s), as further described in Section 6F (*corresponds with Options 1, 2, and 3 in Section 6C above*); or ☐
2. Incorporate the most prevalent features found on buildings within the context area, as further described in Section 6F. In each category of feature (e.g., roof form, roof slope, exterior materials, windows, architectural details), the most prevalent feature is the feature that occurs most frequently on pre-1942 buildings within the context area (c*orresponds with Option 4 in Section 6C above).* ☐

6E. Altered Buildings. If a pre-1942 building within the context area has had its surface materials, windows, architectural detailing, or other features altered, the features selected for incorporation into the design of the project shall be characteristic of the building's original architectural style[4]. For example, a Victorian house that has been covered with stucco or vinyl or aluminum siding will be considered to have horizonal wood siding for the purpose of establishing a context for exterior materials.

Standards—Neighborhood Context	Project complies		
	Yes	No	N/A
6F. Neighborhood Context Standards. The neighborhood context standards apply to street-facing building elevations, as well as the first 10 feet of non-street-facing elevations closest to the street.			
1. ***Roof Form***. In order to meet the roof form standard, a project shall exhibit the same roof form(s) as the reference building(s). If there is no reference building, the project shall be designed to include the most prevalent roof form(s) of the context area. Qualifying roof forms are gable, hip, mansard, gambrel, flat, shed, bonnet, and false front.	☐	☐	

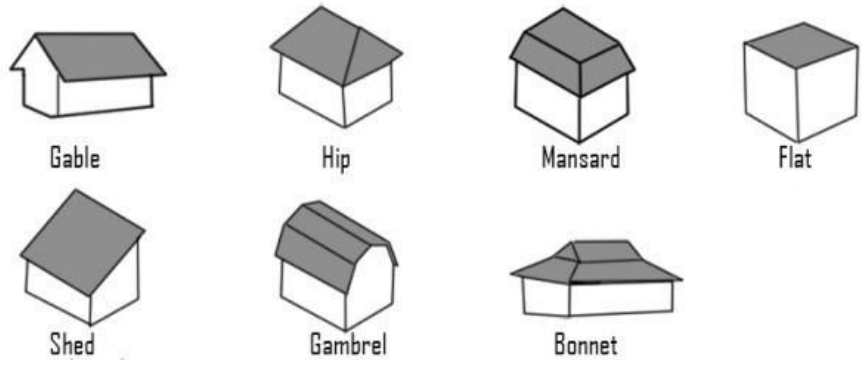

[4] The identification of architectural style shall be according to the characteristics listed in the Guide to Residential Design, the booklet titled "Architectural and Historical Resources of the City of Alameda," or Section 4.3 of the Citywide Design Review Manual. See Appendix C for links to these documents.

<table>
<tr><th rowspan="2">Standards—Neighborhood Context</th><th colspan="3">Project complies</th></tr>
<tr><th>Yes</th><th>No</th><th>N/A</th></tr>
<tr><td>2. Roof Pitch. The roof pitches of the reference building(s) shall be classified into one of four slope categories—flat, low, moderate, or steep—according to the ranges in the table below:

<table><tr><th>Slope Category</th><th>Roof Pitch (rise:run)</th></tr><tr><td>Flat</td><td>≤ 1:12</td></tr><tr><td>Low</td><td>> 1:12 and ≤ 4:12</td></tr><tr><td>Moderate</td><td>> 4:12 and ≤ 7:12</td></tr><tr><td>Steep</td><td>> 7:12</td></tr></table>
A proposed project shall exhibit the same slope category as the reference building(s) across the front half of the project’s roof area. If there is no reference building(s), the project shall be designed to include the most prevalent roof slope category from the context area.</td><td>☐</td><td>☐</td><td></td></tr>
<tr><td>3. Roof Eaves/Overhangs. If the reference building(s) have roof overhangs of 12 inches or more, then the proposed project shall also have overhangs of 12 inches or more. If there is no reference building, the project shall exhibit overhangs of 12 inches or more if 50% or more of buildings in the context area do.</td><td>☐</td><td>☐</td><td>☐</td></tr>
<tr><td>4. Windows. The windows on street-facing façade(s) of a proposed project shall exhibit the same proportions and major divisions exhibited by the windows of the reference building(s). If there is no reference building, the project shall exhibit the window forms that are most prevalent in the context area.</td><td>☐</td><td>☐</td><td></td></tr>
<tr><td>a. Proportions.
i. The project shall match the general proportions (ratio of height to width) of the window proportions that predominate on the reference building(s) or context buildings.</td><td>☐</td><td>☐</td><td></td></tr>
<tr><td>ii. If the windows of the reference building(s) or context buildings are vertically oriented, then the windows of the proposed project shall also be vertically oriented.</td><td>☐</td><td>☐</td><td>☐</td></tr>
<tr><td>iii. If the reference building(s) exhibit groupings of windows, the proposed project may replicate these groupings. Such groupings can include but are not limited to:
(a) Groups of side-by-side vertically oriented windows that together form a horizontal bank of windows.
(b) A square or horizontally oriented (fixed) window flanked by vertically oriented windows (side lites).</td><td>☐</td><td>☐</td><td>☐</td></tr>
</table>

Standards—Neighborhood Context	Project complies		
	Yes	No	N/A
b. *Major Divisions.* i. If the windows of the reference building(s) exhibit rails, other divisions between sashes, or mullions, then any such divisions on the windows of the proposed project shall be in the same orientation (i.e., horizontal or vertical). For example, if the reference building(s) have predominantly single- or double-hung windows, which have a horizontal rail where the two sashes meet, then the windows of the proposed project shall not be horizontal slider windows, which exhibit vertical divisions.	☐	☐	☐
ii. The divisions shall be positioned to correspond with their positioning on the reference building(s). Meeting rails for single- or double-hung windows shall be positioned in the center or the upper half of the window opening.	☐	☐	☐
c. *Alignment.* i. If the reference building(s) have doors and windows in vertical alignment between floors, so shall the proposed project. ii. If the reference building(s) have windows arranged in horizontal alignment within floors, so shall the proposed project. To meet this standard, within each floor of a street-facing façade, the tops of at least 90% of a project's windows must be aligned.	☐	☐	☐
5. ***Exterior Materials***. The primary exterior material(s) used on a project must be selected from primary exterior materials of the reference building(s). In order to be considered primary, a material must cover at least one-third of the area of the street-facing façade(s) of a building. If there is no reference building(s), the project shall include the predominate exterior material exhibited by context area buildings. Qualifying materials are:	*Projects must include one or more of the following:*		
a. Horizontal wood siding. *Where the neighborhood context is horizontal wood siding, the proposed project may use cement fiber or similar synthetic horizontal siding, but it must be smooth surfaced (without imitation raised wood grain), and it may not be vinyl or aluminum.*	☐	☐	☐
b. Board and batten siding. *Plywood may be used as a substitute for boards only if wood battens with a dimension at least 1" x 2" are used at minimum 8" intervals on center, and any Z-bar is covered by trim.*	☐	☐	☐
c. Wood shingles. *Where the neighborhood context is wood shingles, the proposed project may use cement fiber or similar synthetic shingles, but they must be smooth surfaced (without imitation raised wood grain), and they may not be vinyl or aluminum.*	☐	☐	☐
d. Stucco.	☐	☐	☐
e. Pressed brick.	☐	☐	☐

Standards—Neighborhood Context	Project complies		
	Yes	No	N/A
f. Stone, including architectural terra cotta and other stone-like materials.	☐	☐	☐
g. "Half timber," consisting of individual pieces of dimensioned lumber surrounded by stucco.	☐	☐	☐
6. ***Architectural Details.*** A project shall incorporate details that are **typical of the architectural style**[5] of the reference building(s). If there is no reference building, the project shall include prevalent details from the pre-1942 buildings within the context area. A project shall include **two or more** of the following types of details found on the reference building(s) or context buildings and typical of their architectural style:	*Projects must include two or more of the following:*		
a. Window and corner trim of the same depth and width as that found on the reference or context buildings and no smaller than 1" x 4"; however, if the reference building and project have stucco siding, "stucco mold" window trim 2" to 3" wide may be used.	☐	☐	☐
b. Roof eaves/overhangs 18 inches or more deep. *Note: A project might already be required to provide at least 12-inch overhangs, per Section 7D(5), Roof Eaves/Overhangs, above. If the applicant provides 18-inch or deeper roof overhangs, it will also count as an architectural detail in this current list.*	☐	☐	☐
c. Porch columns of the same style and proportions as those of the reference building(s) or context buildings.	☐	☐	☐
d. Exposed rafter tails.	☐	☐	☐
e. Roof brackets with minimum dimensions of 4" x 4".	☐	☐	☐
f. Trellis awnings.	☐	☐	☐
g. Bay windows.	☐	☐	☐
h. Cornices with a minimum 6-inch exposure.	☐	☐	☐
i. Scalloped ("Mission Revival") or other curved parapets.	☐	☐	☐
j. Terra cotta or visually matched tiles (in the case of "Spanish Colonial Revival" or "Mediterranean Revival" reference or context buildings).	☐	☐	☐
k. Any other architectural feature or detail found on a reference building and characteristic of its architectural style. If there is no reference building, another architectural feature or detail prevalent on pre-1942 buildings within the context area. Describe (1): _____ _____;	☐	☐	☐
Describe (2): _____ _____.	☐	☐	☐

[5] The identification of architectural style shall be according to the characteristics listed in the Guide to Residential Design, the booklet titled "Architectural and Historical Resources of the City of Alameda," or Section 4.3 of the Citywide Design Review Manual. See Appendix C.

APPENDIX A: MAP OF TRADITIONAL DESIGN AREA

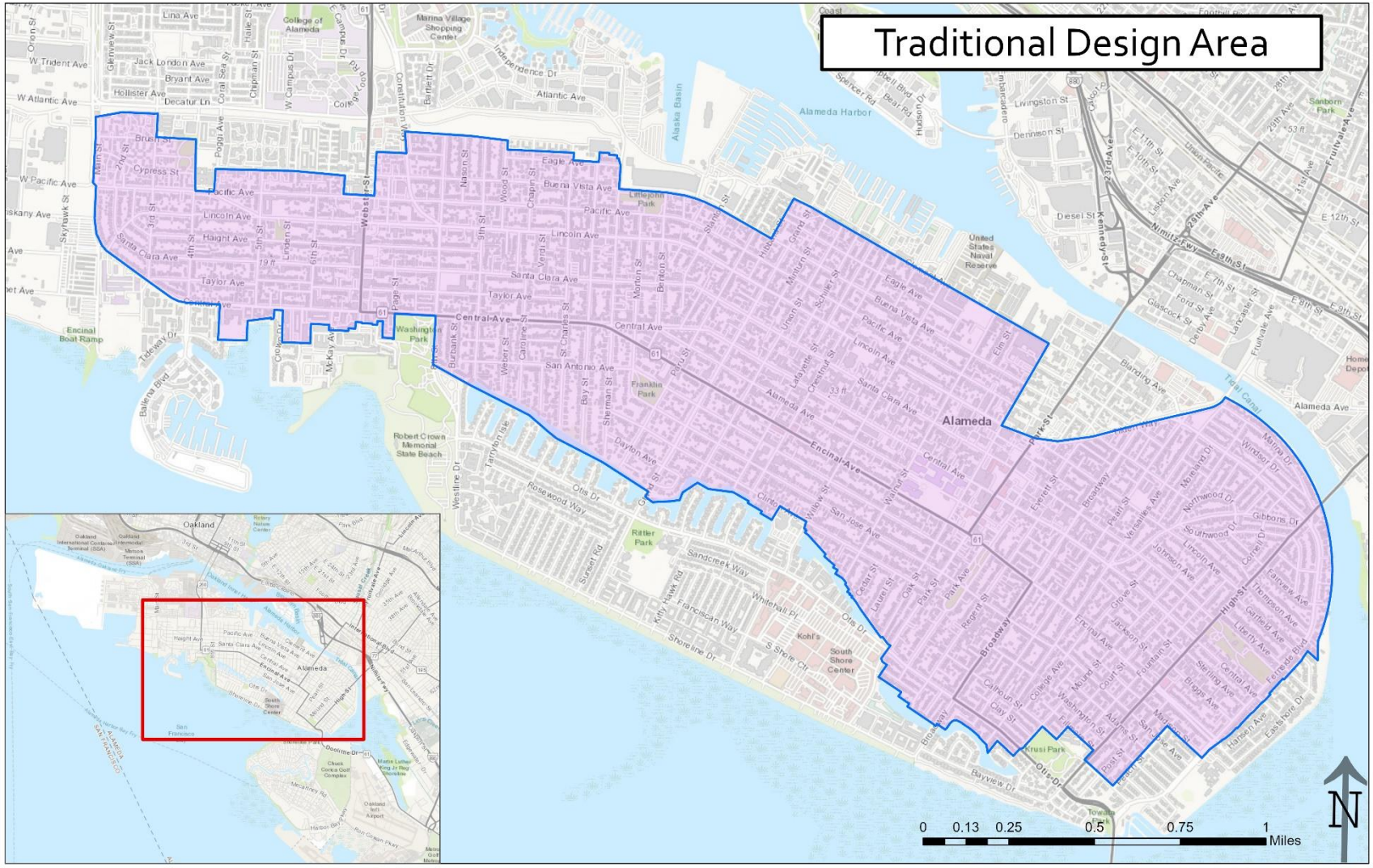

APPENDIX B: WORKSHEET – INVENTORY OF ARCHITECTURAL FEATURES

If the Neighborhood Context Standards of Section 6 apply, and the applicant selects Option 4 under Section 6C, then the applicant must inventory individual architectural features of buildings within the context area. This worksheet is provided for convenience. An applicant may use this worksheet to inventory the features or create and submit their own format for the inventory.

	Address	Roof form	Roof pitch	Roof overhangs	Siding Materials	Windows: proportion, divisions	Trim & detailing	Architectural style (Optional)
1								
2								
3								
4								
5								
6								
7								
8								
9								
10								
11								
12								
13								
14								

	Address	Roof form	Roof pitch	Roof overhangs	Siding Materials	Windows: proportion, divisions	Trim & detailing	Architectural style (Optional)
15								
16								
17								
18								
19								
20								
21								
22								
23								
24								
25								
26								
27								
28								
29								
30								
Predominant feature								

Address	Roof form	Roof pitch	Roof overhangs	Siding Materials	Windows: proportion, divisions	Trim & detailing	Architectural style (Optional)
Frequency of predominant feature (%)							
Feature selected for proposed project							
Key: list of options for each feature	Flat Shed Gable Hip Mansard Gambrel Bonnet Other: _____	Pitch category (rise: run) Flat (≤ 1:12) Low (1:12 - 4:12) Moderate (> 4:12 and ≤ 7:12) Steep (slope > 7:12)	Does building have eaves/roof overhangs 12 inches or greater in depth? Yes No	Horizontal wood siding; Horizontal synthetic siding (1); Board and batten siding; Wood shingles; Stucco; Brick; Stone; Half timber; Other _____	Description, height:width ratio Highly vertical (2:1) Vertical (1:1) Banks of vertical windows Picture windows with side lites Horizontal	Note if any of the following are present: Window and corner trim (approx. width and depth: _____); Deep roof eaves/overhangs; Exposed rafter tails; Roof brackets; Attached trellises; Bay windows; Curved parapets; Other architectural features or details consistent with architectural style (2): _____ _____	Pioneer Victorian Colonial Revival Transitional Craftsman California Bungalow Prairie Tudor Revival French Provincial Revival Spanish Colonial Revival Moderne Ranch House Neoclassical Early 20th-century Commercial Art Deco Modern Other: _____

Notes:

1. May be cement fiber or similar synthetic siding that is smooth-surfaced (without imitation raised wood grain), but not vinyl and aluminum siding.

2. Include details that are characteristic of the architectural style, as identified in the Guide to Residential Design, the Historic Preservation Element of the Alameda General Plan, or Section 4.3 of the Citywide Design Review Manual (See Appendix C).

APPENDIX C: ARCHITECTURAL STYLE GUIDES

The following three sources describe architectural styles that are common in Alameda. Each source contains a series of illustrations of architectural styles, labeled with features that are typical of the style. Any of these three sources may be used to identify the architectural style of a building in order to meet the Neighborhood Context Standards (Section 5) of the Objective Design Review Standards.

THE GUIDE TO RESIDENTIAL DESIGN (2005), APPENDIX PART IV, GUIDE TO ALAMEDA'S ARCHITECTURE

Appendix Part IV from the Guide to Residential Design (2005) presents a series of illustrations of common architectural styles of Alameda's houses. For each style, it describes house form and plan, materials, windows and doors, roof, and decorative elements. See pp. 77 – 94 of the Guide to Residential Design, available at this link:

https://www.alamedaca.gov/files/sharedassets/public/alameda/building-planning-transportation/guidelines/cdd_-_plg_-_gud_-_guide_to_residential_design.pdf

CITYWIDE DESIGN REVIEW MANUAL, SECTION 4.3, ARCHITECTURAL STYLE GUIDELINES

Section 4.3 of the Citywide Design Review Manual includes illustrations and descriptions of several architectural styles found in Alameda. It covers common styles of both commercial and residential buildings. See pp. 47 – 84 (as labeled on the pages) of this document (pp. 8 – 45 of the PDF document)

https://www.alamedaca.gov/files/sharedassets/public/alameda/building-planning-transportation/guidelines/citywide_design_review_manual_1-2014_part2.pdf

THE ARCHITECTURAL AND HISTORICAL RESOURCES OF THE CITY OF ALAMEDA

[Available on the Planning, Building, and Transportation Department website.]