CITY OF ALAMEDA
GROUP 4 SEWERAGE PUMP STATION IMPROVEMENTS
ALAMEDA, CALIFORNIA
PROJECT NO. PW 08-17-37

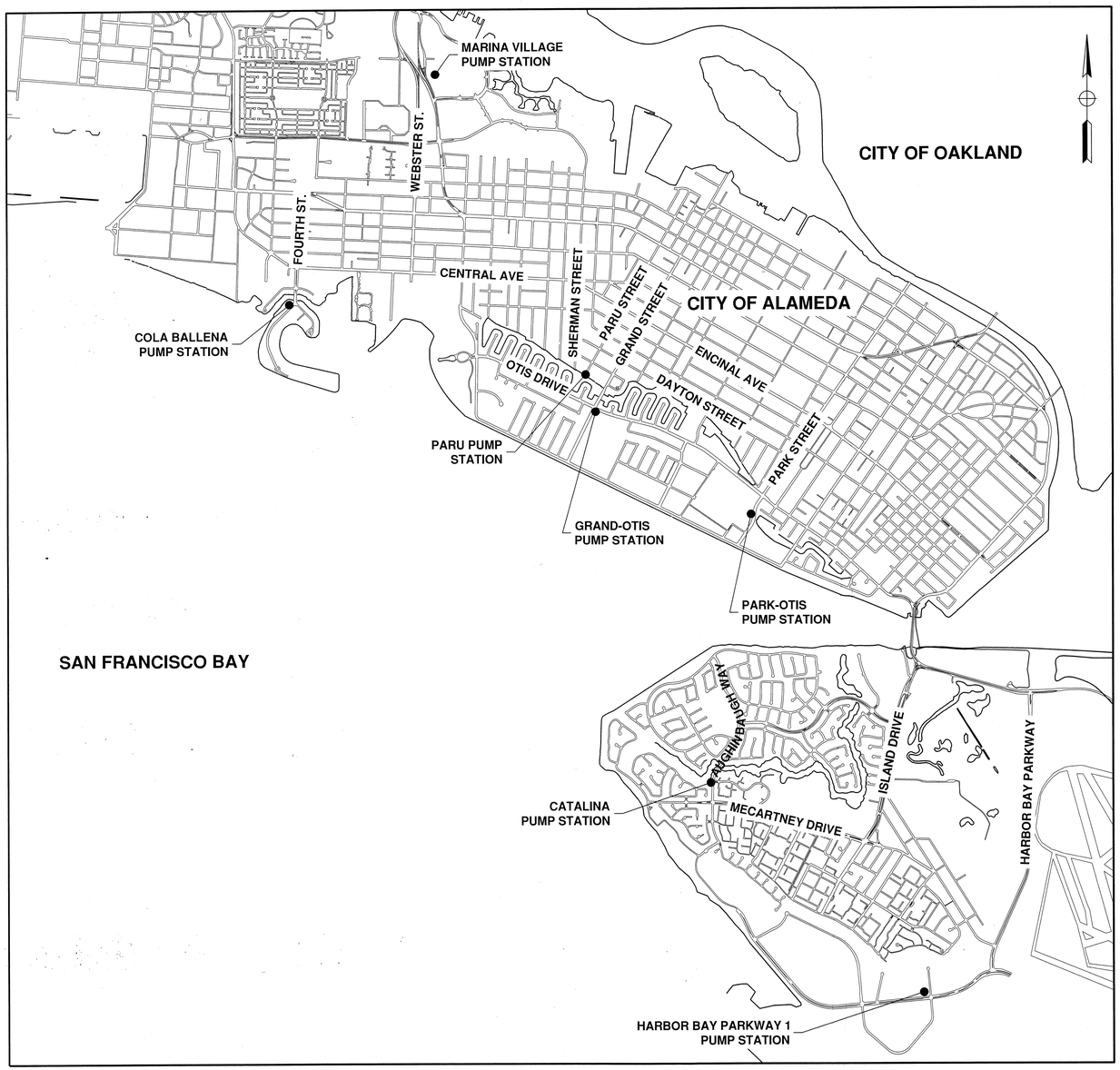

VICINITY MAP

SCALE: 1" = 1,500'

SHEET INDEX

#	SHEET	SHEET NAME
1	T1	TITLE SHEET
2	T2	NOTES, LEGEND, AND ABBREVIATIONS
3	E1	ELECTRICAL SYMBOLS, ABBREVIATIONS, AND GENERAL NOTES
4	C1	COLA BALLENA DEMOLITION PLAN
5	C2	COLA BALLENA IMPROVEMENT PLAN
6	C3	COLA BALLENA IMPROVEMENT DEMOLITION & IMPROVEMENT DETAILS
7	C4	COLA BALLENA FORCE MAIN
8	C5	COLA BALLENA IMPROVEMENT FORCE MAIN DETAILS
9	E2	COLA BALLENA PUMP STATION - ONE-LINE AND SITE PLAN - REMOVAL WORK
10	E3	COLA BALLENA PUMP STATION - DRY WELL PLAN AND DETAILS - REMOVAL WORK
11	E4	COLA BALLENA PUMP STATION - SITE PLAN - NEW WORK
12	E5	COLA BALLENA PUMP STATAION - ONE-LINE - NEW WORK
13	E6	COLA BALLENA PUMP STATION - WET WELL ELEVATIONS
14	E7	COLA BALLENA PUMP STATION - CONTROL SCHEMATIC DIAGRAM
15	E8	COLA BALLENA PUMP STATION - SCHEMATIC DIAGRAM
16	C6	MARINA VILLAGE DEMOLITION PLAN
17	C7	MARINA VILLAGE IMPROVEMENT SITE PLAN
18	C8	MARINA VILLAGE SECTION AND DETAILS
19	E9	MARINA VILLAGE PUMP STATION - SITE PLAN - REMOVAL WORK
20	E10	MARINA VILLAGE PUMP STATION - ONE-LINE - REMOVAL WORK
21	E11	MARINA VILLAGE PUMP STATION - SITE PLAN - NEW WORK
22	E12	MARINA VILLAGE PUMP STATION - ONE-LINE - NEW WORK
23	E13	MARINA VILLAGE PUMP STATION - WET WELL ELEVATIONS
24	E14	MARINA VILLAGE PUMP STATION - CONTROL SCHEMATIC DIAGRAM
25	E15	MARINA VILLAGE PUMP STATION - SCHEMATIC DIAGRAM
26	C9	PARU SITE PLAN
27	E16	PARU PUMP STATION - ONE LINE - REMOVAL WORK
28	E17	PARU PUMP STATION - ONE LINE - NEW WORK
29	E18	PARU PUMP STATION CONDUIT PLAN
30	C10	GRAND-OTIS SITE PLAN & DEMOLITION PLANS
31	C11	GRAND-OTIS PLAN & SECTIONS
32	C12	GRAND-OTIS IMPROVEMENT PLAN & SECTION
33	C13	GRAND-OTIS FORCE MAIN
34	E19	GRAND-OTIS PUMP STATION - ONE-LINE AND SITE PLAN - REMOVAL WORK
35	E20	GRAND-OTIS PUMP STATION - ONE-LINE AND SITE PLAN - NEW WORK
36	E21	GRAND-OTIS PUMP STATION - WET WELL ELEVATIONS
37	C14	PARK-OTIS SITE PLAN & DEMOLITION PLAN
38	C15	PARK-OTIS DEMOLITION SECTIONS
39	C16	PARK-OTIS IMPROVEMENT PLAN & SECTIONS
40	E22	PARK-OTIS PUMP STATION - ONE-LINE AND SITE PLAN - REMOVAL WORK
41	E23	PARK-OTIS PUMP STATION - ONE-LINE AND SITE PLAN - NEW WORK
42	E24	PARK-OTIS PUMP STATION - WET WELL ELEVATIONS
43	C17	CATALINA DEMOLITION PLANS
44	C18	CATALINA SITE IMPROVEMENT PLAN & DEMOLTION SECTION
45	C19	CATALINA IMPROVEMENT PLAN & SECTION
46	C20	CATALINA DETAILS
47	E25	CATALINA PUMP STATION - ONE-LINE AND SITE PLAN - REMOVAL WORK
48	E26	CATALINA PUMP STATION - ONE-LINE AND SITE PLAN - NEW WORK
49	E27	CATALINA PUMP STATION - WET WELL ELEVATIONS
50	C21	HARBOR BAY PARKWAY 1 SITE DEMOLITION PLAN
51	C22	HARBOR BAY PARKWAY 1 DEMOLITION PLAN & SECTION
52	C23	HARBOR BAY PARKWAY 1 SITE IMPROVEMENT PLAN
53	C24	HARBOR BAY PARKWAY 1 IMPROVEMENT PLAN & SECTIONS
54	C25	HARBOR BAY PARKWAY 1 IMPROVEMENT SECTION
55	C26	HARBOR BAY PARKWAY 1 FORCE MAIN
56	E28	HARBOR BAY PARKWAY 1 PUMP STATION - ONE-LINE AND SITE PLAN - REMOVAL WORK
57	E29	HARBOR BAY PARKWAY 1 PUMP STATION - DRY WELL PLAN AND DETAILS - REMOVAL WORK
58	E30	HARBOR BAY PARKWAY 1 PUMP STATION - SITE PLAN - NEW WORK
59	E31	HARBOR BAY PARKWAY 1 PUMP STATION - ONE-LINE - NEW WORK
60	E32	HARBOR BAY PARKWAY 1 PUMP STATION - WET WELL ELEVATIONS
61	E33	HARBOR BAY PARKWAY 1 PUMP STATION - CONTROL SCHEMATIC DIAGRAM
62	E34	HARBOR BAY PARKWAY 1 PUMP STATION - SCHEMATIC DIAGRAM
63	E35	MCC ELEVATION
64	E36	MISCELLANEOUS ELECTRICAL DETAILS
65	D1	CIVIL DETAILS
66	D2	CIVIL DETAILS
67	D3	CIVIL DETAILS
68	S1	PROJECT DATA AND GENERAL NOTES
69	S2	SECTIONS AND DETAILS
70	P1	ALAMEDA MUNICIPAL POWER SERVICE REQUIREMENTS

CITY OF ALAMEDA BUILDING DEPARTMENT DEFERRED SUBMITTALS:

THE CONTRACTOR SHALL SUBMIT THE FOLLOWING ITEMS TO THE CITY'S BUILDING DEPARTMENT FOR REVIEW AND APPROVAL PRIOR TO INSTALLATION OF THE EQUIPMENT:

1. CONTRACTOR IS RESPONSIBLE FOR DESIGNING THE GENERATOR CONCRETE PAD AND ANCHORAGE AND THE ATS CONCRETE PAD AND ANCHORAGE. CONTRACTOR SHALL PROVIDE DETAILS AND CALCULATIONS FOR THE ANCHORAGE OF GENERATOR AND PANEL TO THE CONCRETE SUPPORT PADS: PROVIDE A CONTINUOUS LOAD PATH WITH ADEQUATE STRENGTH AND STIFFNESS AS REQUIRED TO TRANSFER ALL FORCES FROM THE POINT OF APPLICATION TO THE FINAL POINT OF RESISTANCE [ASCE 7 12.1.3]. DETAILS AND CALCULATIONS SHALL BE STAMPED AND SIGNED BY A CIVIL OR STRUCTURAL ENGINEER LICENSED IN THE STATE OF CALIFORNIA.

PUMP STATION ADDRESS AND PLAN CHECK NUMBERS

CITY PUMP STATION #	PUMP STATION NAME	ADDRESS	CITY PLAN CHECK NUMBER
2	CATALINA	1849 AUGHINBAUGH WAY	E19-0383
10	HARBOR BAY PARKWAY 1	1303 HARBOR BAY PARKWAY	E19-0382
16	PARK OTIS	2130 SOUTH SHORE CENTER DR	E19-0384
22	GRAND OTIS	1700 GRAND ST	E19-0385
24	PARU	690 PARU ST	E19-0386
28	COLA BALLENA	1241 BALLENA BLVD	E19-0387
31	MARINA VILLAGE	713 MARINA VILLAGE PKWY	E19-0388

SUBMITTED

11/27/19

SCHAAF & WHEELER
BENJAMIN L. SHICK, RCE 68813
EXP. 9/30/2021

PROJECT AUTHORIZATION

THESE CONSTRUCTION DOCUMENTS CONTAINED HEREIN, FOR THE GROUP 4 SEWAGE PUMP STATION RENOVATION FOR RELIABILITY AND SAFETY IMPROVEMENTS, HAVE BEEN APPROVED BY THE CITY ENGINEER IN ACCORDANCE WITH THE CITY OF ALAMEDA ORDINANCE NO. 3154 AND CALIFORNIA GOVERNMENT CODE 830.6.

SCOTT WIKSTROM, RCE #56266
CITY ENGINEER, CITY OF ALAMEDA, CA

NO	REVISIONS	DATE	APPR
1			
2			
3			
4			
5			
6			
7			

REGISTERED PROFESSIONAL ENGINEER BENJAMIN L. SHICK No. 68813 CIVIL STATE OF CALIFORNIA

Schaaf & Wheeler
CONSULTING CIVIL ENGINEERS
1171 HOMESTEAD RD, STE. 255
SANTA CLARA, CA 95050
(408) 246-4848

CITY OF ALAMEDA
GROUP 4 - SEWERAGE PUMP STATION RENOVATIONS FOR RELIABILITY AND SAFETY IMPROVEMENTS

TITLE SHEET

DATE: 11/27/19
SCALE: AS SHOWN
DESIGN: CLP
DRAWN: CLP
CHECKED: BLS

DWG 9425 CASE 35

T1

1 OF 70

GENERAL NOTES

1. ALL MATERIALS AND WORKMANSHIP SHALL CONFORM TO THE GENERAL AND SPECIFIC PROVISIONS, STANDARD DRAWINGS, AND REQUIREMENTS OF THE CITY OF ALAMEDA.

2. NO CHANGE TO THE PROJECT IMPROVEMENT PLANS SHALL BE PERMITTED WITHOUT PRIOR APPROVAL BY THE DIRECTOR OF PUBLIC WORKS/CITY ENGINEER.

3. CONTRACTOR AGREES TO ASSUME SOLE AND COMPLETE RESPONSIBILITY FOR JOB SITE CONDITIONS DURING THE CONSTRUCTION OF THIS PROJECT, INCLUDING SAFETY OF ALL PERSONS AND PROPERTY; THAT THIS REQUIREMENT SHALL APPLY CONTINUOUSLY AND NOT BE LIMITED TO NORMAL WORKING HOURS; AND THAT THE CONTRACTOR SHALL DEFEND, INDEMNIFY AND HOLD THE CITY AND ENGINEER HARMLESS FROM ANY AND ALL LIABILITY, REAL OR ALLEGED, IN CONNECTION WITH THE PERFORMANCE OF WORK ON THIS PROJECT, EXCEPT TO THE EXTENT ARISING FROM THE SOLE NEGLIGENCE OF THE CITY OR ENGINEER.

4. CONTRACTOR SHALL CONFORM TO THE RULES AND REGULATIONS OF THE STATE CONSTRUCTION SAFETY ORDERS.

5. INFORMATION CONCERNING EXISTING UTILITIES IS NOT GUARANTEED; LOCATIONS SHOWN ON THE PLANS ARE APPROXIMATE ONLY. CONTRACTOR SHALL REQUEST THAT UNDERGROUND FACILITIES BE LOCATED AND MARKED IN THE FIELD A MINIMUM OF 48 HOURS PRIOR TO THE START OF CONSTRUCTION BY CALLING UNDERGROUND SERVICE ALERT (U.S.A.) AT 800-227-2600. CONTRACTOR SHALL NOTIFY THE ENGINEER OF ANY POTENTIAL CONFLICT WITH EXISTING UTILITIES PRIOR TO CONSTRUCTION□

6. CONTRACTOR SHALL NOTIFY THE CITY OF ALAMEDA DEPARTMENT OF PUBLIC WORKS AT LEAST 48 HOURS IN ADVANCE OF THE START OF ANY CONSTRUCTION ACTIVITY. ALL UTILITY SHUTDOWNS ARE TO BE COORDINATED THROUGH THE CITY. ANY TEMPORARY SUSPENSION OF THE WORK OR SUBSEQUENT RESUMPTION OF WORK REQUIRES THE NOTIFICATION OF THE CITY AND THE ENGINEER.

7. ALL EXISTING UTILITIES SHALL BE ADEQUATELY SUPPORTED AND PROTECTED TO THE SATISFACTION OF THE CITY. IN THE EVENT OF DAMAGE TO ANY UTILITY OCCASIONED BY THE CONTRACTOR OPERATIONS, THE CONTRACTOR, AT HIS SOLE COST AND EXPENSE, WILL IMMEDIATELY CAUSE REPAIRS TO BE MADE TO THE SATISFACTION OF THE AFFECTED UTILITY. NOTIFY THE ENGINEER OF ANY ADJUSTMENTS NECESSITATED BY WAY OF CONFLICT WITH EXISTING UTILITIES.

8. CONTRACTOR SHALL PROVIDE ALL LIGHTS, SIGNS, BARRICADES, FLAG MEN, CONES OR OTHER DEVICES NECESSARY TO PROVIDE FOR PUBLIC SAFETY IN ACCORDANCE WITH THE SPECIFICATIONS. CONTRACTOR SHALL PROVIDE A TRAFFIC CONTROL PLAN IN CONFORMANCE WITH THE SPECIFICATIONS.

9. CONTRACTOR SHALL REPLACE, AT HIS EXPENSE, ALL TREES, SHRUBS, LAWNS, FENCES AND IMPROVEMENTS WHICH ARE TO REMAIN INTACT BUT HAVE BEEN REMOVED OR DAMAGED DURING CONSTRUCTION. CONTRACTOR SHALL NOT REMOVE OR DAMAGE IMPROVEMENTS LOCATED WITHIN CITY PROPERTY WITHOUT WRITTEN PERMISSION FROM THE CITY.

10. WRITTEN PERMISSION FROM APPROPRIATE PROPERTY OWNERS MUST BE OBTAINED PRIOR TO REMOVING ANY EXISTING FENCES, SHEDS, OR OTHER PROPERTY OUTSIDE OF THE PUBLIC RIGHT-OF-WAY OR CITY PROPERTY.

11. ALL PERMANENT IMPROVEMENTS REMOVED OR DAMAGED BY THE CONTRACTOR SHALL BE RESTORED TO THEIR ORIGINAL LOCATION AND CONDITION BY THE CONTRACTOR USING NEW MATERIALS AS DIRECTED BY THE ENGINEER. ALL INFRASTRUCTURE, INCLUDING BUT NOT LIMITED TO CURBS AND GUTTERS, SIDEWALKS, DRIVEWAYS, PAVEMENT RESTORATION, ETC. SHALL BE REPLACED PER THE CITY'S STANDARD PLANS.

12. CONTRACTOR TO PROVIDE TEMPORARY FENCING AND GATES WHENEVER AND WHEREVER EXISTING FENCING OR GATES ARE REMOVED FOR CONSTRUCTION PURPOSES.

13. CONTRACTOR TO MAINTAIN A MEANS OF ACCESS TO PROPERTIES, DRIVEWAYS, AND DWELLINGS AT ALL TIMES AS DETERMINED BY THE ENGINEER.

14. THE CONTRACTOR SHALL NOTIFY, BY CIRCULAR, AS DIRECTED BY THE ENGINEER, ALL BUSINESS ESTABLISHMENTS AND RESIDENCES AFFECTED BY THE WORK, AT LEAST 72 HOURS PRIOR TO START OF CONSTRUCTION. CIRCULAR SHALL BE SUBJECT TO APPROVAL BY THE DIRECTOR OF PUBLIC WORKS/CITY ENGINEER.

15. ALL SURPLUS AND UNSUITABLE MATERIAL SHALL BE REMOVED FROM THE SITE AND PUBLIC RIGHT-OF-WAY.

16. CONTRACTOR SHALL PERFORM HIS CONSTRUCTION AND OPERATION IN A MANNER WHICH WILL NOT ALLOW HARMFUL POLLUTANTS TO ENTER THE STORM DRAIN SYSTEM OR ANY WATERWAY. THE CONTRACTOR SHALL PRESENT HIS PROPOSED POLLUTION PREVENTION BMP'S AT THE PRE-CONSTRUCTION MEETING FOR DISCUSSION AND APPROVAL.

17. THE CONTRACTOR SHALL NEITHER WASTE NOR DEPOSIT ANY HAZARDOUS MATERIALS WITHIN THE AREAS OF THIS PROJECT, INCLUDING BUT NOT LIMITED TO GASOLINE OR DIESEL FUELS, MOTOR OILS OR TRANSMISSION FLUIDS, ANTIFREEZE, HYDRAULIC FLUIDS, LUBRICANTS, STARTING FLUIDS AND FILTERS, AND/OR CONTAINERS FOR THESE PRODUCTS. HAZARDOUS MATERIAL SPILLS THAT OCCUR AS A RESULT OF EITHER EQUIPMENT FAILURES OR VANDALISM, INCLUDING ALL ADJACENT CONTAMINATED SOILS, SHALL BE REMOVED AND TRANSPORTED TO AN ENVIRONMENTALLY APPROVED DISPOSAL SITE. ALL REMOVAL, TRANSPORTATION AND DISPOSAL COSTS SHALL BE THE RESPONSIBILITY OF THE CONTRACTOR OR HIS SUBCONTRACTORS.

18. OVERNIGHT PARKING OF CONSTRUCTION EQUIPMENT IN THE STREET RIGHT-OF-WAY OR ADJACENT PARKING LOT SHALL NOT BE PERMITTED, EXCEPT AT LOCATION(S) APPROVED BY THE CITY.

19. STREET ADDRESS SIGN SHALL BE POSTED ON THE GENERATOR FENCE, FACING THE STREET. APPROXIMATE LOCATION OF SIGN IS SHOWN ON THE SITE PLANS. THE SIGN SHALL BE PLACED IN A LOCATION THAT IS CLEARLY VISIBLE FROM THE STREET. SIGN SHALL BE ⅛" THICK ALUMINUM WITH 1-INCH RADIUS CORNERS. SIGN SHALL BE COVERED WITH GREEN ENGINEER-GRADE REFLECTIVE SHEETING AND SHALL HAVE WHITE HORIZONTAL LETTERING. LETTERING SHALL BE 4 INCHES IN HEIGHT AND STENCILS SHALL HAVE ¾" THICK STROKE.

□□□ ALL STATIONS NEW FENCING SHALL BE PROVIDED WITH A KNOX KEY□LOCK BOX□APPLICATION FOR THE KNOX KEY□LOCK BOX IS AVAILABLE FROM THE FIRE DEPARTMENT ADMINISTRATION STAFF□WHICH MAY BE REACHED AT □□□33□□□□□□ CONTRACTOR SHALL ALSO COORDINATE KNOX KEY□LOCK BOX LOCATION WITH THE FIRE INSPECTOR□

□□□ THE CONTRACTOR MUST CONTACT ALAMEDA MUNICIPAL POWER (AMP) TO GAIN ACCESS TO THE ELECTRIC UTILITY BOXES AND FOR AMP TO INSPECT THE SERVICE CONDUIT INSTALLATION□THE CONTRACTOR SHALL CONTACT AMP AT □□□□□□3□□□ TO COORDINATE UTILITY BOX ACCESS AND INSPECTIONS□

□□□ FIRE EXTINGUISHERS (□A□□B□C TYPE) SHALL BE PLACED AT EACH SITE E□UIPPED WITH AN EMERGENCY GENERATOR□IN THE LOCATION SHOWN ON THE SITE PLANS□ EXTINGUISHERS SHALL BE MOUNTED TO THE INSIDE WALL OF THE PROPOSED MAINTENANCE CABINETS OR CONTROL PANELS PER THE MANUFACTURERS RECOMMENDATIONS□ PENETRATIONS THROUGH NEW CABINET SHALL MEET THE ASSOCIATED SPECIFICATIONS RE□UIREMENTS□

ABBREVIATIONS

AB	AGGREGATE BASE	LF	LINEAL FEET
AC	ASPHALTIC CONCRETE OR ASBESTOS CEMENT	MAX	MAXIMUM
AMP	ALAMEDA MUNICIPAL POWER	MIN	MINIMUM
ATS	AUTOMATIC TRANSFER SWITCH	MJ	MECHANICAL JOINT
BFP	BACK FLOW PREVENTER	MCC	MOTOR CONTROL CENTER
BM	BENCH MARK	MFRG	MANUFACTURER
BOC	BACK OF CURB	MON	MONUMENT
C.	CONDUIT	(N)	NEW
CL	CENTERLINE	NOM	NOMINAL
CLR	CLEAR	NTS	NOT TO SCALE
C.O.	CONDUCTOR	PL	PLASTIC
CONC	CONCRETE	PE	PLAIN END
DEG	DEGREE	POC	POINT OF CONNECTION
DIA	DIAMETER	PUE	PUBLIC UTILITY EASEMENT
DIP	DUCTILE IRON PIPE	PVC	POLY VINYL CHLORIDE
DWY	DRIVEWAY	RCP	REINFORCED CONCRETE PIPE
(E)	EXISTING	REQD	REQUIRED
EA	EACH	RFCA	RESTRAINED FLANGED COUPLING ADAPTER
ELEC	ELECTRICAL	ROW	RIGHT OF WAY
ELECT	ELECTRICAL	SCH	SCHEDULE
EL, ELEV	ELEVATION	SDMH	STORM DRAIN MANHOLE
EG	EXISTING GRADE/ ENGINE-GENERATOR	SPECS	SPECIFICATIONS
		SS	STAINLESS STEEL, SANITARY SEWER
EQ	EQUAL	SSCO	SANITARY SEWER CLEAN OUT
ESMT	EASEMENT	SSFM	SANITARY SEWER FORCE MAIN
FCA	FLANGED COUPLING ADAPTER	SSMH	SANITARY SEWER MANHOLE
FDR	FEEDER	STA	STATION
FG	FINISH GRADE	SD	STORM DRAIN
FL	FLANGE	SDCB	STORM DRAIN CATCH BASIN
FLR	FLOOR	STL	STEEL
FM	FORCE MAIN	TC	TOP OF CURB
FRP	FIBERGLASS REINFORCED PLASTIC	TSB	TRAFFIC SIGNAL BOX
GALV	GALVANIZED	TW	TOP OF WALL
GND	GROUND	TYP	TYPICAL
GRV	GROOVE	UG	UNDERGROUND
GV	GATE VALVE	UON	UNLESS OTHERWISE NOTED
HV	HIGH VOLTAGE	VCP	VITRIFIED CLAY PIPE
HP	HORSEPOWER	W/	WITH
ID	INSIDE DIAMETER	WM	WATER METER
INV	INVERT	WV	WATER VALVE
KW	KILOWATT	XFMR	TRANSFORMER

LEGEND

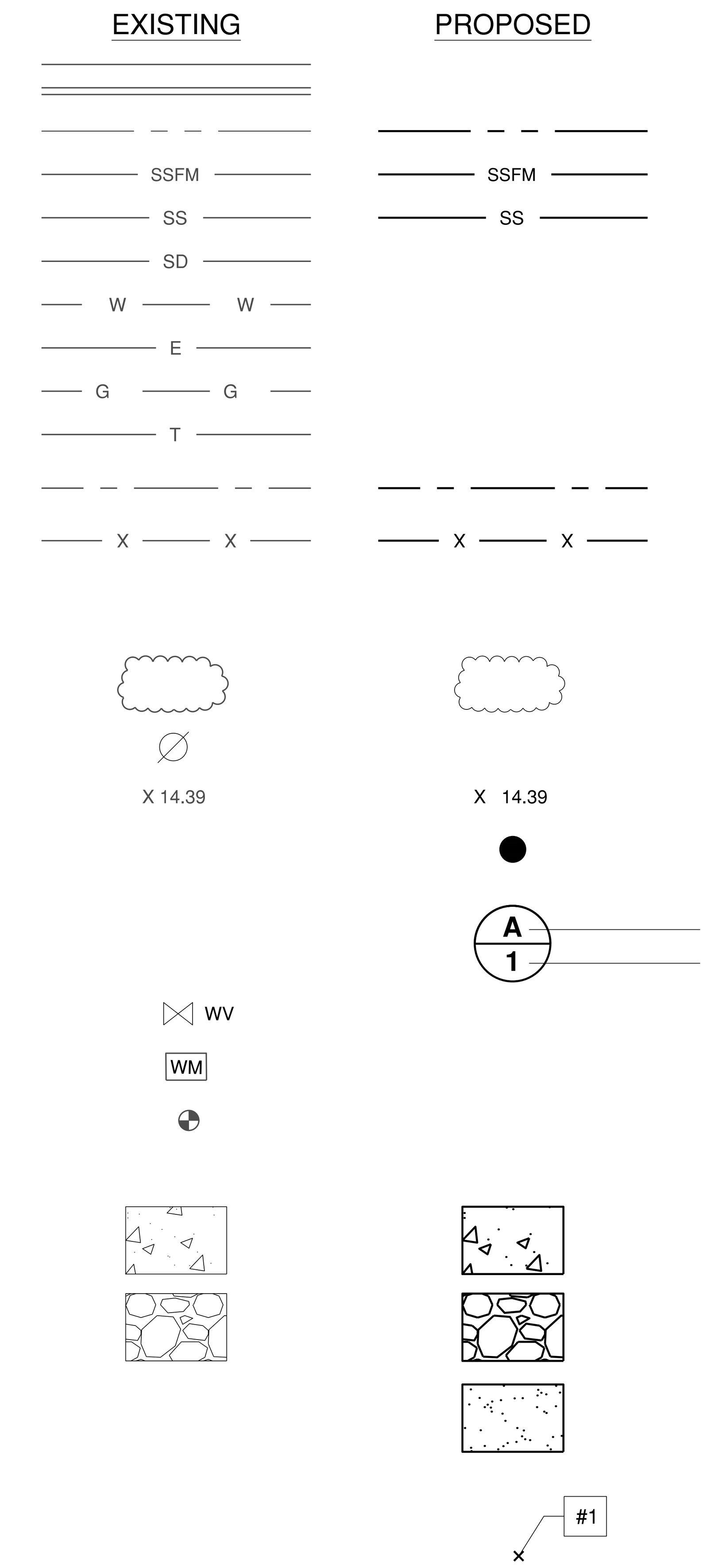

CURB, GUTTER AND SIDEWALK
EASEMENT / PROPERTY LINE
SANITARY SEWER FORCE MAIN
SANITARY SEWER
STORM DRAIN
WATER MAIN
UNDERGROUND ELECTRIC
UNDERGROUND GAS
UNDERGROUND TELECOM LINE
CENTER LINE
CHAIN LINK FENCE
LANDSCAPING
POWER POLE
SPOT ELEVATION
BOLLARD
DETAIL OR SECTION DESIGNATION
SHEET NO. WHERE DETAIL OR SECTION IS DRAWN
WATER VALVE
WATER METER
MONUMENT DISC
CONCRETE
CLASS 2 AB OR DRAIN ROCK, AS INDICATED
LIGHTWEIGHT FILL OR BEDDING, AS INDICATED
COORDINATE NUMBER

TREE PRESERVATION GUIDELINES

THESE GUIDELINES PROVIDE FOR THE CARE AND MAINTENANCE OF TREES BEFORE, DURING AND AFTER CONSTRUCTION. THE GOAL OF TREE PROTECTION AND PRESERVATION GUIDELINES IS TO PROVIDE FOR A SUCCESSFUL TRANSITION FOR THE TREE(S) WITHIN THE MODIFIED SITE.

PRE-CONSTRUCTION ACTIVITIES
THESE ACTIVITIES SHOULD BE UNDERTAKEN PRIOR TO INITIATION OF CONSTRUCTION ACTIVITY. IN ADDITION TO MODIFICATIONS TO THE PROJECT DESIGN TO REDUCE TREE IMPACTS, ALL STEPS THAT IMPROVE THE HEALTH OF TREES PRIOR TO CONSTRUCTION WILL GREATLY IMPROVE THE CHANCE OF SURVIVAL.

1. TIMING OF ROOT LOSS ROOT LOSS THAT OCCURS IN LATE FALL SEASON IS PREFERABLE TO CUTTING TREE ROOTS IN THE SPRING. PRUNING ACTIVITIES ARE BEST UNDERTAKEN IN MID TO LATE SUMMER OR WINTER. PRUNING BOTH THE CANOPY AND ROOTS AT THE SAME TIME SHOULD BE AVOIDED IF POSSIBLE.

2. DESIGNATE TREE ROOT PROTECTION ZONE (RPZ) THE TREE PROTECTION ZONE DESIGNATES AN AREA SURROUNDING A TREE OR GROUPING OF TREES THAT IS TO BE FENCED OFF FROM ALL ACCESS UNTIL DESIGNATED BY A CERTIFIED ARBORIST. THE RPZ IS COMMONLY DEFINED AS ONE (1) FOOT RADIAL DISTANCE FOR EVERY ONE (1) INCH IN TREE DIAMETER (DBH). EXAMPLE: A SINGLE STEM TREE MEASURING 30 INCHES IN DIAMETER, (MEASURED AT 54 INCHES OR 4.5 FEET ABOVE GRADE) WOULD HAVE A CRITICAL ROOT ZONE WITH A RADIUS OF 30 FEET. THIS IS ROUGHLY EQUIVALENT TO THE AREA COMMONLY REFERRED TO AS THE DRIP ZONE.

   ARBORIST CAN MODIFY THE RPZ DISTANCE FROM THE BASE OF THE TREE BASED UPON SITE CONDITIONS AND THE LEVEL OF ROOT PRESENCE. IT SHOULD BE UNDERSTOOD THAT TREE ROOTS OFTEN EXTEND OUT FROM THE BASE TO MORE THAN THREE TIMES THE DISTANCE DEFINED BY THE CRITICAL ROOT ZONE. AN ARBORIST SHOULD MONITOR ALL GRADING AND TRENCHING ACTIVITY THAT IS WITHIN TWICE THE DISTANCE OF THE RPZ. THE LARGER THE PROTECTION ZONE THAT IS PROVIDED, THE GREATER THE LIKELIHOOD OF LONG-TERM TREE SURVIVAL.

3. TREE ROOT PROTECTION ZONE FENCING TREE PROTECTION FENCING SHALL BE 6' TALL CHAIN LINK TYPE, MOUNTED TO STEEL POSTS DRIVEN FIRMLY INTO THE GROUND.

4. ROOT PROTECTION AND ROOT PRUNING ROOT PROTECTION MEASURES MUST BE IN PLACE PRIOR TO THE BEGINNING OF CONSTRUCTION ACTIVITIES. NECESSARY ROOT PRUNING IS BEST ACCOMPLISHED PRIOR TO THE BEGINNING OF CONSTRUCTION ACTIVITIES WHEN EXCAVATION EQUIPMENT WILL BE USED. AFTER BEING EXPOSED BY HAND OR AIR EXCAVATION, ROOTS ARE PRUNED UNDER ARBORIST SUPERVISION. CONSTRUCTION ACTIVITIES ARE THEN FREE TO OCCUR OUTSIDE OF THE ROOT PRUNING BOUNDARY. SUPPLEMENTAL IRRIGATION - ARBORIST WILL DESIGNATE SUPPLEMENTAL IRRIGATION BASED UPON THE LEVEL OF ROOT LOSS, SOIL CONDITIONS, TREE HEALTH AND TIME OF YEAR.

5. MULCHING - USE OF FOUR TO SIX INCHES OF ORGANIC MULCH (WOOD CHIPS ARE BEST) ON SOIL SURFACE WILL REDUCE SOIL COMPACTION AND EVAPORATIVE SOIL MOISTURE LOSS. RECOMMENDED MATERIAL IS WOOD CHIPS GENERATED FROM TREE TRIMMING. FRESH REDWOOD, INCENSE CEDAR AND WALNUT CHIPS ARE NOT ACCEPTABLE, NOR IS PALM GENERATED MULCH.

6. COMPOST COMPOST IS OFTEN RECOMMENDED FOR PLACEMENT IMMEDIATELY UNDER THE MULCH. GOOD QUALITY COMPOST PROVIDES NUTRIENT VALUE. COMPOST MUST BE REPRESENTED BY A RECENT LABORATORY ANALYSIS TO CONFIRM QUALITY.

7. PRUNING ALL PRUNING MUST COMPLY WITH ANSI A300 PRUNING STANDARDS. PRUNING MUST BE MINIMIZED, PARTICULARLY WHEN ROOT LOSS OCCURS. PRUNING PRIOR TO CONSTRUCTION SHOULD INCLUDE: NECESSARY CLEARANCE PRUNING, DEADWOOD REMOVAL AND SAFETY PRUNING.

TREE PROTECTION DURING CONSTRUCTION
THE LEVEL OF ARBORIST MONITORING OF THE PROJECT CAN BE QUITE VARIABLE, DEPENDING UPON THE DEGREE OF ENCROACHMENT INTO ROOT SYSTEMS AND THE EARLY LEVELS OF CONTRACTOR COMPLIANCE WITH THE TREE PROTECTION GUIDELINES.

TREE PRESERVATION GUIDELINES (CONT.)

1. PRE-CONSTRUCTION MEETING WITH ALL CONSTRUCTION PERSONNEL - IT IS IMPORTANT THAT CONSTRUCTION CREW UNDERSTANDS THE TREE PROTECTION REQUIREMENTS. ALL PERSONNEL WORKING ON SITE SHOULD BE PROVIDED AN ORIENTATION TO TREE PRESERVATION MEASURES AND RULES BY THE ARBORIST ASSIGNED TO MONITOR TREE PRESERVATION.

2. OBSERVE FENCED RPZ THIS AREA IS OFF LIMITS TO ALL PERSONNEL, EQUIPMENT, MATERIALS STORAGE, OR ANY OTHER ACTIVITIES. FENCING MAY BE RELOCATED ONLY UNDER ARBORIST SUPERVISION.

WORK ACTIVITIES OCCURRING WITHIN THE DESIGNATED RPZ
1. ROOT PROTECTION - AREAS WHERE ROOTS CANNOT BE FENCED REQUIRE PROTECTION FROM CONTAMINANTS AND COMPACTION. THE EFFECTS OF FOOT TRAFFIC CAN BE MITIGATED THROUGH THE USE OF SIX (6) INCHES OF WOOD CHIP MULCH AND ¾ INCH PLYWOOD PLACED ON TOP.

WHEN EQUIPMENT IS TO BE USED INSIDE OF THE DESIGNATED RPZ, SOIL MUST BE COVERED WITH 12 INCHES OF WOOD CHIPS AND TWO LAYERS OF ¾ INCH PLYWOOD OR ONE LAYER OF 1 1/8 INCH PLYWOOD OR METAL TRENCH PLATES.

2. TRUNK AND SCAFFOLD PROTECTION WHENEVER CONSTRUCTION ACTIVITY MUST OCCUR INSIDE THE TREE PROTECTION ZONE, THE BASE OF THE TREE AND THE FIRST EIGHT-FEET OF THE TRUNK MUST BE PROTECTED. PROTECTION IS GENERALLY PROVIDED BY WRAPPING THE TRUNK UP TO THE FIRST BRANCH WITH 10 WRAPS OF ORANGE PLASTIC CONSTRUCTION FENCING OR USE OF STRAW WADDLES WRAPPED AROUND THE TREE. ADDITIONAL PROTECTION CAN BE PROVIDED BY EITHER STRAW BALES OR USE OF VERTICAL 2X4 BOARDS STRAPPED TO THE TREE. ARBORIST MAY REQUIRE ANY OR ALL OF THE TRUNK PROTECTION MEASURES DEPENDING UPON THE SITUATION.

3. SOIL MOISTURE CONTROL - WATER STRESS IS DETRIMENTAL TO TREE HEALTH, PARTICULARLY DURING THE SPRING. SUPPLEMENTAL IRRIGATION IS REQUIRED WHENEVER TREE ROOTS ARE UNCOVERED OR SEVERED DUE TO TRENCHING OR GRADING. OPEN TRENCHES WITH EXPOSED ROOTS REQUIRE MINIMUM TWO LAYERS OF DAMP BURLAP OR OTHER ACCEPTABLE COVERING AT ALL TIMES. AN ARBORIST WILL DETERMINE THE AMOUNT OF SUPPLEMENTAL WATERING REQUIRED BASED UPON SOIL MOISTURE INVESTIGATION AND WEATHER CONDITIONS.

4. REQUIRED METHOD OF TRENCHING WITHIN CRITICAL ROOT ZONE - CAREFULLY HAND EXCAVATION OR TUNNELING SHALL BE THE ACCEPTED METHOD FOR INSTALLING UNDERGROUND UTILITIES. THE AIR SPADE CAN ALSO BE USED MUCH MORE EFFICIENTLY WHEN A LARGE AMOUNT OF SUCH TRENCHING MUST BE UNDERTAKEN. ARBORIST IS TO SUPERVISE ANY SUCH ACTIVITY.

POST CONSTRUCTION MITIGATION
ALL VALUABLE TREES WHICH HAVE BEEN IMPACTED IN ANY MANNER (ROOT LOSS, SOIL MOISTURE CHANGES, OR NECESSARY PRUNING) WILL REQUIRE MITIGATION TO OFFSET THE ADVERSE IMPACT AND MAINTAIN THE LEVEL OF VIGOR IN THE TREE PRIOR TO BEING IMPACTED IMPACT. TREES THAT WERE NOT VIGOROUS PRIOR TO CONSTRUCTION WILL REQUIRE EXTRA CARE.

1. MONITORING TREE HEALTH - REGULAR VISUAL INSPECTION OF TREES WILL AID IN ASSESSING WHERE FURTHER MITIGATION IS REQUIRED. TREE DECLINE SHOULD BE RECORDED AND REFERENCED AGAINST PRE-CONSTRUCTION HEALTH ASSESSMENT. LEAF AND STEM INSECTS AND FUNGAL PATHOGENS ARE A SIGN OF POOR TREE HEALTH (LOW ENERGY RESERVES).

2. MONITORING OF SOIL MOISTURE - IT IS IMPORTANT THAT SIGNIFICANT CHANGES IN SOIL MOISTURE LEVELS WITHIN TREE ROOT ZONES BE IDENTIFIED EARLY, PRIOR TO VISIBLE EVIDENCE OF TREE DECLINE. MOISTURE SHOULD BE MONITORED BY VISUAL INSPECTION USING A SOIL PROBE OR THROUGH THE USE OF TENSIOMETERS PLACED AT KEY LOCATIONS. SUPPLEMENTAL IRRIGATION IS BEST PROVIDED DURING MIDDLE AND LATE SPRING. IN CASES WHERE TREES HAVE SUFFERED ROOT LOSS, SUPPLEMENTAL IRRIGATION WILL BE REQUIRED FOR A NUMBER OF YEARS IN THE AREA WHERE ROOTS WERE SEVERED.

TREE PRESERVATION GUIDELINES (CONT.)

3. MITIGATION OF SOIL COMPACTION - THE LEVEL AND DEPTH OF SOIL COMPACTION MUST BE ASSESSED AND MITIGATED AS NECESSARY. MITIGATION OF SOIL COMPACTION IN AREAS WHERE ROOTS ARE PRESENT MUST MINIMIZE ROOT LOSS. TOOLS MOST SUITABLE TO MITIGATE SOIL COMPACTION ARE THE WATER JET OR AIR SPADE.

4. LANDSCAPING - ALL LANDSCAPING PLANNING MUST TAKE PRECAUTIONS WHEN PLANTING WITHIN THE DESIGNATED RPZ. ALL PLANT MATERIALS SHOULD BE SELECTED FOR COMPATIBILITY WITH THE FAVORED MOISTURE REGIME OF THE TREES. WITH NATIVE OAK TREES, THIS IS PARTICULARLY CRITICAL. IRRIGATION MUST BE DESIGNED TO COMPLY WITH THE REQUIREMENTS OF THE TREE SPECIES AND SOIL CONDITIONS. IRRIGATION LINES MUST MINIMIZE ROOT LOSS AND PASS UNDER ROOTS WHEN POSSIBLE. AIR SPADE IS RECOMMENDED FOR EXCAVATION WITHIN THE DESIGNATED RPZ.

5. CONTINUED MULCHING - MULCH IS EXTREMELY BENEFICIAL IN CREATING A HEALTHY ROOT ENVIRONMENT. A REGULAR PROGRAM OF MULCH APPLICATION IS RECOMMENDED TO HELP RETAIN SOIL MOISTURE, PROVIDE A SOURCE OF NUTRIENTS, AND HELP CONTROL WEEDS. THE CONTINUED USE OF GOOD QUALITY COMPOST AS A MULCH IS BENEFICIAL AS A SOURCE OF NUTRITION.

6. FERTILIZATION - PRIOR TO FERTILIZATION, SOIL ANALYSIS AND POSSIBLY LEAF TISSUE ANALYSIS MUST BE UNDERTAKEN. TREES SHOULD BE FERTILIZED ONLY WHEN THE NUTRITIONAL LIMITATIONS HAVE BEEN IDENTIFIED. LEAF TISSUE ANALYSIS IS ANOTHER EXCELLENT TOOL FOR THIS DETERMINATION. EXCESSIVE NITROGEN FERTILIZATION IS KNOWN TO DRAW SUCKING INSECTS (APHID, SCALE, ETC.) TO THE PLANTS AND PROVIDE NUTRITION TO FUNGAL PATHOGENS IN THE SOIL.

7. PEST MANAGEMENT PROGRAM - HEALTHY TREES DO NOT GENERALLY HAVE SERIOUS PEST PROBLEMS. STRESSED TREES ARE ATTRACTIVE HOSTS TO PATHOGENS, WHICH CAN CONTRIBUTE TO DECLINE AND EVENTUAL DEATH. PEST MANAGEMENT IS PRESCRIBED WHEN MONITORING INDICATES A NEED AND TREE HEALTH IS MARGINAL.

IRRIGATION NOTES

1. ALL DISTURBED IRRIGATION SHALL BE REPLACED IN KIND, EXCEPT AT PARK OTIS AS NOTED.

2. ALL IRRIGATION HEADS SURROUNDING THE PROPOSED IMPROVEMENTS SHALL BE REPLACED OR ADJUSTED SO THAT SPRAY IS LIMITED TO THE LANDSCAPED AREAS AND DOES NOT HIT THE PROPOSED IMPROVEMENTS.

3. EXISTING IRRIGATION IRRIGATION EQUIPMENT (PIPES, HEADS, CONDUIT, WIRES, ETC.) LOCATED UNDER PROPOSED IMPROVEMENTS SHALL BE RE-ROUTED AROUND CONCRETE PADS. A ONE FOOT MINIMUM CLEARANCE SHALL BE PROVIDED FROM IMPROVEMENTS (CONCRETE PADS, FENCES, ETC.) TO IRRIGATION EQUIPMENT. ALL IRRIGATION LINES REQUIRED TO BE UNDER CONCRETE SHALL BE SLEEVED WITH 2" SCH 40 CONDUIT.

4. NEW IRRIGATION HEADS MAY BE REQUIRED TO PROVIDE COVERAGE FOR IRRIGATION HEADS REMOVED FOR IMPROVEMENTS.

NO	REVISIONS	DATE	APPR
1			
2			
3			
4			
5			
6			
7			

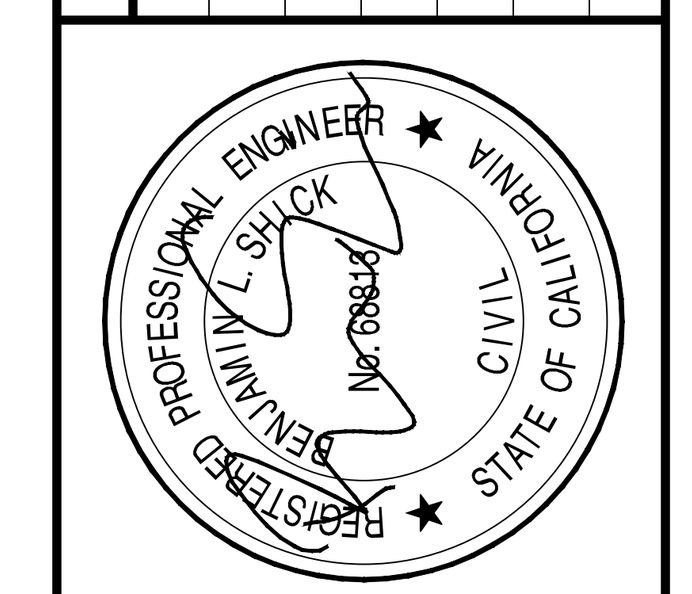

Schaaf & Wheeler
CONSULTING CIVIL ENGINEERS
1171 HOMESTEAD RD, STE. 255
SANTA CLARA, CA 95050
(408) 246-4848

CITY OF ALAMEDA
GROUP 4 - SEWERAGE PUMP STATION RENOVATIONS FOR RELIABILITY AND SAFETY IMPROVEMENTS
NOTES, LEGEND & ABBREVIATIONS

DATE: 11/27/19
SCALE: AS SHOWN
DESIGN: CLP
DRAWN: CLP
CHECKED: BLS

DWG 9425 CASE 35

T2

GENERAL SYMBOLS AND LEGEND

(E) EXISTING
(N) NEW
(R) RELOCATED
DELTA CONNECTIONS OR DELTA CONNECTED WINDINGS
OPEN DELTA CONNECTIONS
WYE CONNECTIONS OR WYE CONNECTED WINDINGS
GROUND, GROUND CONNECTION
(2) SHEET NOTE IDENTIFICATION, REFER TO SHEET NOTE NUMBER 2
(K) KEY INTERLOCK
(MI) MECHANICAL INTERLOCK
DISCONNECTING MEANS
-X-X-X- FENCE
± APPROXIMATE DIMENSION
POLE MOUNTED ANTENNA

ELECTRICAL SYMBOLS

POWER TRANSFORMER, TWO WINDING
SWITCH
SWITCH, FUSED
TEMPERATURE SWITCH, CLOSED AT LOW TEMPERATURE
TEMPERATURE SWITCH, OPEN AT LOW TEMPERATURE
FLOAT SWITCH, CLOSED AT LOW WATER LEVEL
FLOAT SWITCH, OPEN AT LOW WATER LEVEL
OVERLOAD ELEMENT
LOW VOLTAGE MOLDED CASE CIRCUIT BREAKER
CAPACITOR, STARTING
NORMALLY OPEN CONTACT
NORMALLY CLOSED CONTACT
FUSE
(RES) RESISTOR, IN CONTROL CIRCUIT
SOLENOID VALVE OPERATING COIL
(G) INDICATING LIGHT, G-GREEN, R-RED, W-WHITE, A-AMBER
(CR) CONTROL RELAY
(SR) STARTING RELAY
BATTERY BANK
(27AC) UNDERVOLTAGE RELAY
(M) AMP REVENUE METER
GENERATOR RECEPTACLE
POLE MOUNTED LIGHT FIXTURE
4 FOOT FLUORESCENT LIGHT FIXTURE
$ SINGLE POLE LIGHT SWITCH, 20A, 120V
DUPLEX RECEPTACLE, SURFACE MOUNTED, NEMA 5-20R, 20 AMP, 125 VOLT, +15" MIN. UON. SUBSCRIPT "GFI" DENOTES WITH GROUND FAULT INTERRUPTER WHERE INDICATED ON PLAN. ALL OUTDOOR RECEPTACLES SHALL BE WEATHERPROOF (WP) WITH LOCKABLE COVER.
E-S EMERGENCY STOP SWITCH
℄ CENTERLINE, STRUCTURE OR EQUIPMENT
LV LOW VOLTAGE WIRING SYSTEM
CONDUIT STUB-DOWN
FLEXIBLE WIRING AND EQUIPMENT CONNECTION.
EXISTING EQUIPMENT TO BE REMOVED

UNDERGROUND DISTRIBUTION AND GROUNDING

UNDERGROUND CONDUITS
G GROUND GRID, BURIED OR IN MH/VAULT
UNDERGROUND CONDUIT, CAPPED
GROUNDING PIGTAILS
UNDERGROUND THERMO-WELD CONNECTIONS
3/4" DIA X 10' LONG COPPERCLAD GROUND ROD
3/4" DIA X 10' LONG COPPERCLAD GROUND ROD IN ACCESSIBLE CONCRETE GROUND ROD BOX
CONDUIT STUB-UPS

ABBREVIATIONS

A	A	AMPERE
	A.C.	ALTERNATING CURRENT
	AI	ANALOG INPUT
	AIC	AMPS INTERRUPTING CURRENT
	AMP	ALAMEDA MUNICIPAL POWER
	ANN	ANNUNCIATOR
	AO	ANALOG OUTPUT
	AS	AMMETER SWITCH
	ATS	AUTOMATIC TRANSFER SWITCH
	AUX.	AUXILIARY
	AWG	AMERICAN WIRE GAUGE
B	BAL	BALANCE
	BATT.	BATTERY
	BCW	BARE COPPER WIRE
	BKR	BREAKER
	BLDG.	BUILDING
	BOT	BOTTOM
C	C	CONDUIT
	CB	CIRCUIT BREAKER
	CAB	CABINET
	CAP	CAPACITOR
	CHGR.	CHARGER
	CKT	CIRCUIT
	CL,CLE	CURRENT LIMITING, CURRENT LIMITING "E" FUSE
	COL	COLUMN
	COMP	COMPARTMENT
	CONT.	CONTROL
	CNTLR	CONTROLLER
	CO	CONDUIT ONLY
	CONC	CONCRETE
	COND.	CONDUCTOR
	CP	CONTROL PANEL
	CPT	CONTROL POWER TRANSFORMER
	C.S.	CONTROL SWITCH
	CT	CURRENT TRANSFORMER
	CU	COPPER
	CUB	CUBICLE
D	D	DEEP
	DB	DUCT BANK
	DC	DIRECT CURRENT
	D.E.	DEAD END
	DI	DIGITAL INPUT
	DIA	DIAMETER
	DIM	DIMENSION
	DISC	DISCONNECT
	DIST.	DISTRIBUTION
	DN	DOWN
	DO	DIGITAL OUTPUT
	DP	DISTRIBUTION PANEL
	DW	DRY WEATHER
	DWG	DRAWING
E	EA	EACH
	EF	EXHAUST FAN
	EO	ELECTRICALLY OPERATED
	ELEC	ELECTRICAL
	ELEV	ELEVATION
	EPR	ETHYLENE PROPYLENE RUBBER
	EQPMNT	EQUIPMENT
	ETM	ELAPSED TIME METER

ABBREVIATIONS (CONTINUED)

F	FDR	FEEDER
	F, FU	FUSE
	FLD	FIELD
	FLC	FULL LOAD CURRENT
	FLS	FLOAT SWITCH
	FT	FOOT, FEET
	FUT.	FUTURE
	FVR	FULL VOLTAGE REVERSING
	FVNR	FULL VOLTAGE NON-REVERSING
G	GAL	GALLONS
	GALV	GALVANIZED
	GC	GROUND CHECK
	GFI, GFCI	GROUND FAULT CIRCUIT INTERRUPTER
	G.L.	GRADE LEVEL
	GND	GROUND
H	HI	HIGH
	HT	HEIGHT
	HH	HANDHOLE
	HTR	HEATER
	HOA	HAND-OFF-AUTO
	HV	HIGH VOLTAGE
I	IC	INTERRUPTING CAPACITY
	INC	INCOMING
	IND	INDICATION
	INS	INSULATOR
	IRR	IRRIGATION
	ISR	INTRINSICALLY SAFE RELAY
J	JB	JUNCTION BOX
K	KCM	THOUSAND CIRCULAR MILS
	KV	KILOVOLT
	KVA	KILOVOLT AMPERE
	KVAR	KILOVOLT AMPERE REACTIVE
	KW	KILOWATT
L	L	LONG, LENGTH
	L.A.	LIGHTNING ARRESTER
	LBS	POUNDS
	LCP	LIGHTING CONTROL PANEL
	L-L	LINE TO LINE
	L-N	LINE TO NEUTRAL
	LTG	LIGHTING
	LO	LOW
	LVL	LEVEL
	LxWxH	LENGTH, WIDTH AND HEIGHT
	LPS	LOW PRESSURE SODIUM
	LV	LOW VOLTAGE
M	MAX	MAXIMUM
	MCC	MOTOR CONTROL CENTER
	MCCB	MOLDED CASE CIRCUIT BREAKER
	MCP	MOTOR CIRCUIT PROTECTOR
	MCS	MOLDED CASE SWITCH
	MED	MEDIUM
	MFR.	MANUFACTURER
	MH	MANHOLE
	MI	MECHANICAL INTERLOCK
	MIN	MINIMUM
	MISC	MISCELLANEOUS
	MO	MANUALLY OPERATED
	MR	MULTI-RATIO
	MTD	MOUNTED
	MV	MEDIUM VOLTAGE
N	N.C.	NORMALLY CLOSED
	N.I.C.	NOT IN CONTRACT
	N.O.	NORMALLY OPEN
	NTS	NOT TO SCALE
	NP	NAMEPLATE
O	OC	ON CENTER
	O/C	OVERCURRENT
	O.H.	OVERHEAD
	OL	OVERLOAD
	OPER.	OPERATING

ABBREVIATIONS (CONTINUED)

P	PB	PULL BOX
	PCB	POLYCHLORINATED BIPHENYLS
	PCC	PORTLAND CEMENT CONCRETE
	PF	POWER FACTOR
	PFR	POWER FAIL RELAY
	PH	PHASE
	PLC	PROGRAMMABLE LOGIC CONTROLLER
	PMP	PUMP
	PNL.	PANEL
	PT	POTENTIAL TRANSFORMER
	PTT	PUSH-TO-TEST
	PVC	POLYVINYL CHLORIDE
	PWR	POWER
R	R	RADIUS
	(R)	RELOCATE
	REM	REMOTE
	RSC, RSG	RIGID STEEL CONDUIT, GALVANIZED
	REQ'D	REQUIRED
	RTU	REMOTE TERMINAL UNIT
S	S.A.	SURGE ARRESTERS
	SB	SHORTING BLOCK
	SBC	SBC COMMUNICATIONS, INC.
	SCADA	SUPERVISORY CONTROL AND DATA ACQUISITION
	SCH	SCHEDULE
	SCTB	SHORT CIRCUITING TERMINAL BLOCK
	SEC	SECONDARY
	SHLD.	SHIELDED
	SHT	SHEET
	SPR	SPARE
	SPD	SURGE PROTECTION DEVICE
	SS	STAINLESS STEEL
	SSRVS	SOLID STATE REDUCED VOLTAGE STARTER
	STA.	STATION
	STD	STANDARD
	SUB	SUBSTATION
	SVCE	SERVICE
	SV	SOLENOID VALVE
	SW	SWITCH
	SWBD	SWITCHBOARD
	SWGR	SWITCHGEAR
	SYM	SYMMETRICAL
T	TEL	TELEPHONE
	TELEM	TELEMETERING
	TEMP	TEMPORARY
	TERM	TERMINAL
	TOC	TOP OF CONCRETE
	TS	TEST SWITCH
	TSP	TWISTED SHIELDED PAIR
	TVSS	TRANSIENT VOLTAGE SURGE SUPPRESSOR
	TYP.	TYPICAL
U	UG	UNDERGROUND
	UON	UNLESS OTHERWISE NOTED
	UL	UNDERWRITER LABORATORIES
	UPS	UNINTERRUPTIBLE POWER SUPPLY
	UV	UNDERVOLTAGE
V	V	VOLT
	V.C.B.	VACUUM CIRCUIT BREAKER
	VF	VENTILATING FAN
	VFD	VARIABLE FREQUENCY DRIVE
	VS	VOLTMETER SWITCH
	V.T.	VOLTAGE TRANSFORMER
W	W/	WITH
	WT	WEIGHT
	WP	WEATHERPROOF
X	XDCR	TRANSDUCER
	XFMR	TRANSFORMER
	XFR	TRANSFER
	XMTR	TRANSMITTER

SYMBOLS AND ABBREVIATIONS ARE FOR GENERAL USE.
DISREGARD THOSE WHICH ARE NOT USED ON THE DRAWINGS.

GENERAL NOTES:

1. THE COMPLETE ELECTRICAL INSTALLATION SHALL BE IN ACCORDANCE WITH THE LATEST EDITION OF NATIONAL ELECTRICAL CODE, THE LATEST RULES AND REGULATIONS OF THE SAFETY ORDERS ISSUED BY THE DIVISION OF INDUSTRIAL SAFETY, THE NATIONAL FIRE PROTECTION ASSOCIATION AND ALL APPLICABLE STATE AND LOCAL CODES ISSUED BY AUTHORITIES HAVING JURISDICTION.
2. LOCATION(S) OF CONTROLLERS, CONDUIT, PULL BOXES AND OTHER EQUIPMENT AS SHOWN ON THE PLAN IS APPROXIMATE AND MAY BE CHANGED TO SUIT FIELD CONDITIONS AS DIRECTED BY THE ENGINEER.
3. PULL ROPE SHALL BE PROVIDED IN ALL EMPTY CONDUITS.
4. ELECTRICAL EQUIPMENT AND FEEDER SHALL BE SUPPORTED AND/OR ANCHORED IN ACCORDANCE WITH 2016 CBC SEISMIC REQUIREMENTS.
5. ALL CONDUCTORS SHALL BE 600 VOLT, STRANDED COPPER, WITH TYPE XHHW-2 INSULATION, UNLESS OTHERWISE NOTED. THE MINIMUM SIZE CONDUCTORS SHALL BE #12 AWG UNLESS OTHERWISE NOTED.

NO	REVISIONS	DATE	APPR
1			
2			
3			
4			
5			
6			
7			

PROFESSIONAL ENGINEER * REGISTERED * STATE OF CALIFORNIA * JULIO C. HERDOCIA * No. 9580 * 9/30/20 * ELECTRICAL

engineers, inc.
3350 scott blvd., bldg. 11
santa clara, ca. 95054
(408) 986-8558
FAX (408) 986-9627

PROJECT NO. 18697-06

CITY OF ALAMEDA
GROUP 4 - SEWERAGE PUMP STATION RENOVATIONS FOR RELIABILITY AND SAFETY IMPROVEMENTS
ELECTRICAL
SYMBOLS, ABBREVIATIONS AND GENERAL NOTES

DATE:	SCALE:	DESIGN:	DRAWN:	CHECKED:
11/27/19	AS SHOWN	JCH	VDM	JCH

DWG 9425 CASE 35

E1

#28 COLA BALLENA PUMP STATION

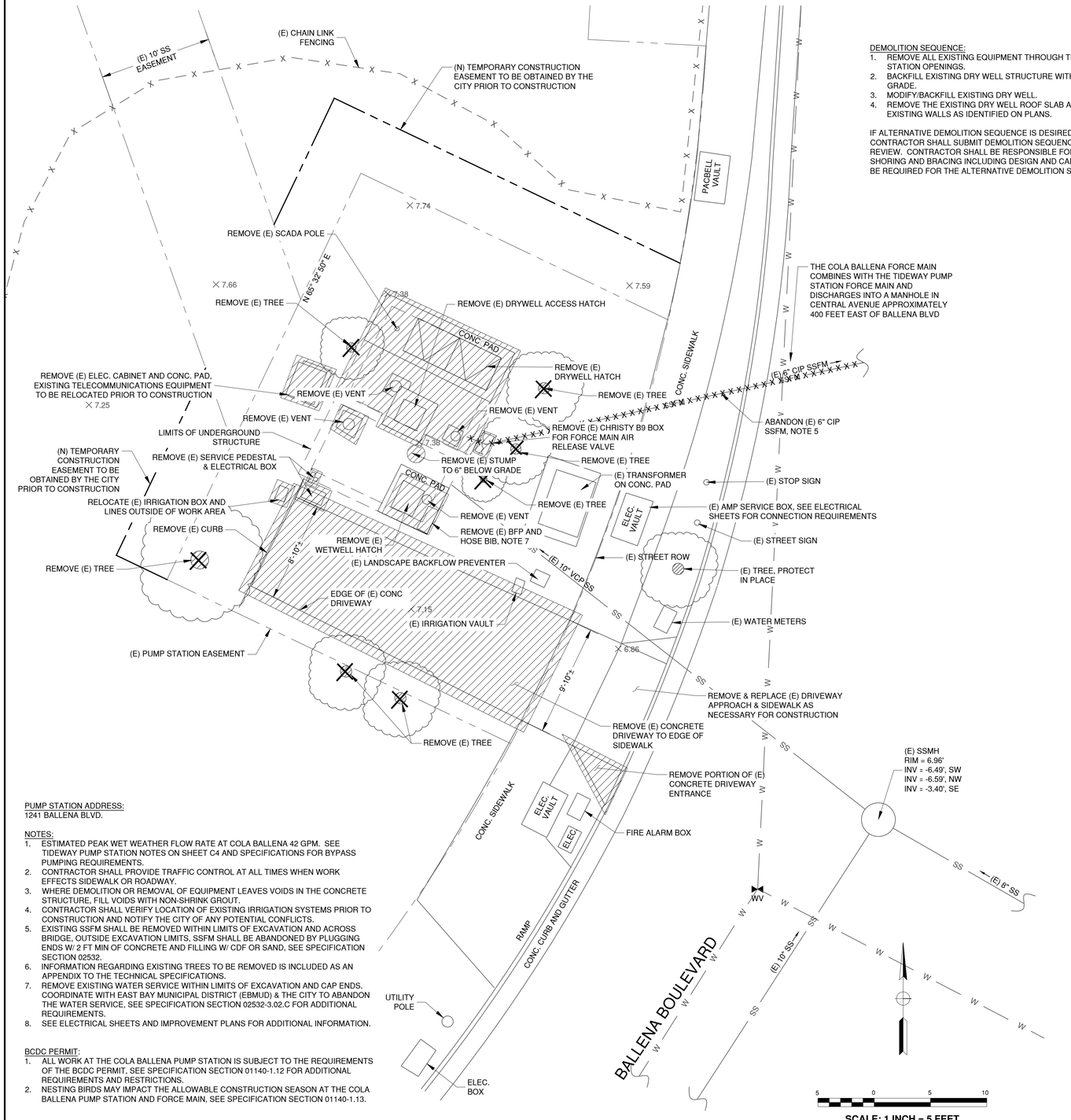

DEMOLITION PLAN

SCALE: 1" = 5'

DEMOLITION SEQUENCE:

1. REMOVE ALL EXISTING EQUIPMENT THROUGH THE EXISTING PUMP STATION OPENINGS.
2. BACKFILL EXISTING DRY WELL STRUCTURE WITHIN 3'± BELOW EXISTING GRADE.
3. MODIFY/BACKFILL EXISTING DRY WELL.
4. REMOVE THE EXISTING DRY WELL ROOF SLAB AND PORTION OF EXISTING WALLS AS IDENTIFIED ON PLANS.

IF ALTERNATIVE DEMOLITION SEQUENCE IS DESIRED BY THE CONTRACTOR, CONTRACTOR SHALL SUBMIT DEMOLITION SEQUENCE TO ENGINEER FOR REVIEW. CONTRACTOR SHALL BE RESPONSIBLE FOR ANY SUPPLEMENTAL SHORING AND BRACING INCLUDING DESIGN AND CALCULATION THAT MAY BE REQUIRED FOR THE ALTERNATIVE DEMOLITION SEQUENCE.

THE COLA BALLENA FORCE MAIN COMBINES WITH THE TIDEWAY PUMP STATION FORCE MAIN AND DISCHARGES INTO A MANHOLE IN CENTRAL AVENUE APPROXIMATELY 400 FEET EAST OF BALLENA BLVD

PUMP STATION ADDRESS:
1241 BALLENA BLVD.

NOTES:

1. ESTIMATED PEAK WET WEATHER FLOW RATE AT COLA BALLENA 42 GPM. SEE TIDEWAY PUMP STATION NOTES ON SHEET C4 AND SPECIFICATIONS FOR BYPASS PUMPING REQUIREMENTS.
2. CONTRACTOR SHALL PROVIDE TRAFFIC CONTROL AT ALL TIMES WHEN WORK EFFECTS SIDEWALK OR ROADWAY.
3. WHERE DEMOLITION OR REMOVAL OF EQUIPMENT LEAVES VOIDS IN THE CONCRETE STRUCTURE, FILL VOIDS WITH NON-SHRINK GROUT.
4. CONTRACTOR SHALL VERIFY LOCATION OF EXISTING IRRIGATION SYSTEMS PRIOR TO CONSTRUCTION AND NOTIFY THE CITY OF ANY POTENTIAL CONFLICTS.
5. EXISTING SSFM SHALL BE REMOVED WITHIN LIMITS OF EXCAVATION AND ACROSS BRIDGE; OUTSIDE EXCAVATION LIMITS, SSFM SHALL BE ABANDONED BY PLUGGING ENDS W/ 2 FT MIN OF CONCRETE AND FILLING W/ CDF OR SAND, SEE SPECIFICATION SECTION 02532.
6. INFORMATION REGARDING EXISTING TREES TO BE REMOVED IS INCLUDED AS AN APPENDIX TO THE TECHNICAL SPECIFICATIONS.
7. REMOVE EXISTING WATER SERVICE WITHIN LIMITS OF EXCAVATION AND CAP ENDS. COORDINATE WITH EAST BAY MUNICIPAL DISTRICT (EBMUD) & THE CITY TO ABANDON THE WATER SERVICE, SEE SPECIFICATION SECTION 02532-3.02.C FOR ADDITIONAL REQUIREMENTS.
8. SEE ELECTRICAL SHEETS AND IMPROVEMENT PLANS FOR ADDITIONAL INFORMATION.

BCDC PERMIT:

1. ALL WORK AT THE COLA BALLENA PUMP STATION IS SUBJECT TO THE REQUIREMENTS OF THE BCDC PERMIT, SEE SPECIFICATION SECTION 01140-1.12 FOR ADDITIONAL REQUIREMENTS AND RESTRICTIONS.
2. NESTING BIRDS MAY IMPACT THE ALLOWABLE CONSTRUCTION SEASON AT THE COLA BALLENA PUMP STATION AND FORCE MAIN, SEE SPECIFICATION SECTION 01140-1.13.

HOA CONTACT INFORMATION:
BALLENA BAY TOWNHOUSE ASSOCIATION NO. 1
DARRELL FOSS, COMMON INTEREST MANAGEMENT
(925) 743-3080

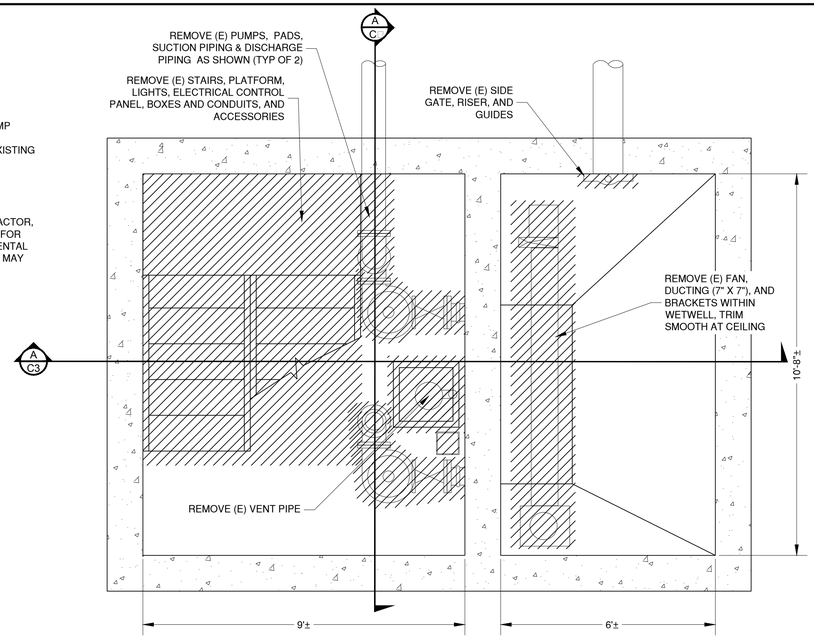

PUMP STATION DEMOLITION PLAN AT PUMP ELEVATION

SCALE: 1/2" = 1'

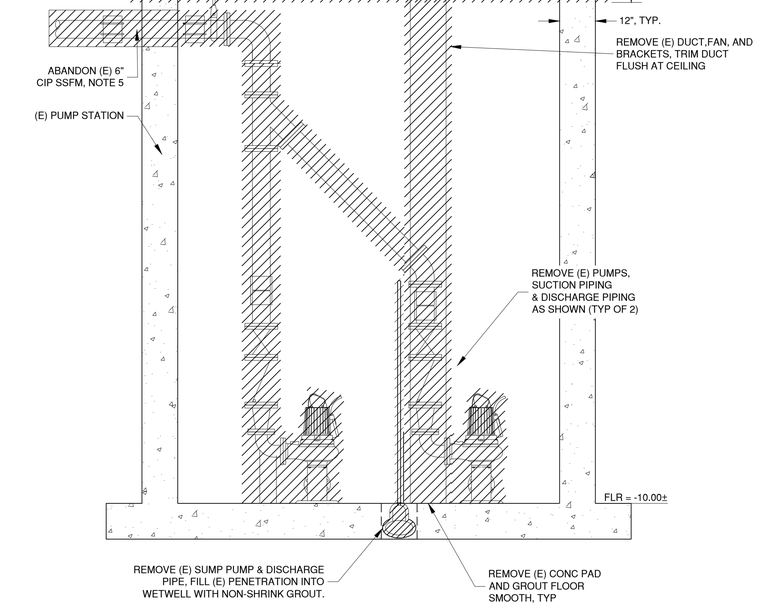

DEMOLITION SECTION A/C1

SCALE: 1/2" = 1'

NO	REVISIONS	DATE	APPR
1			
2			
3			
4			
5			
6			
7			

PROFESSIONAL ENGINEER ★ BRIAN L. SCHAAF ★ No. 56000 ★ CIVIL ★ STATE OF CALIFORNIA

Schaaf & Wheeler
CONSULTING CIVIL ENGINEERS
1171 HOMESTEAD RD. STE. 255
SANTA CLARA, CA 95050
(408) 246-4848

CITY OF ALAMEDA
GROUP 4 - SEWERAGE PUMP STATION RENOVATIONS FOR RELIABILITY AND SAFETY IMPROVEMENTS

COLA BALLENA DEMOLITION PLAN

DATE:	11/27/19
SCALE:	AS SHOWN
DESIGN:	CLP
DRAWN:	CLP
CHECKED:	BLS

DWG 9425 CASE 35

C1

4 OF 70

#28 COLA BALLENA PUMP STATION

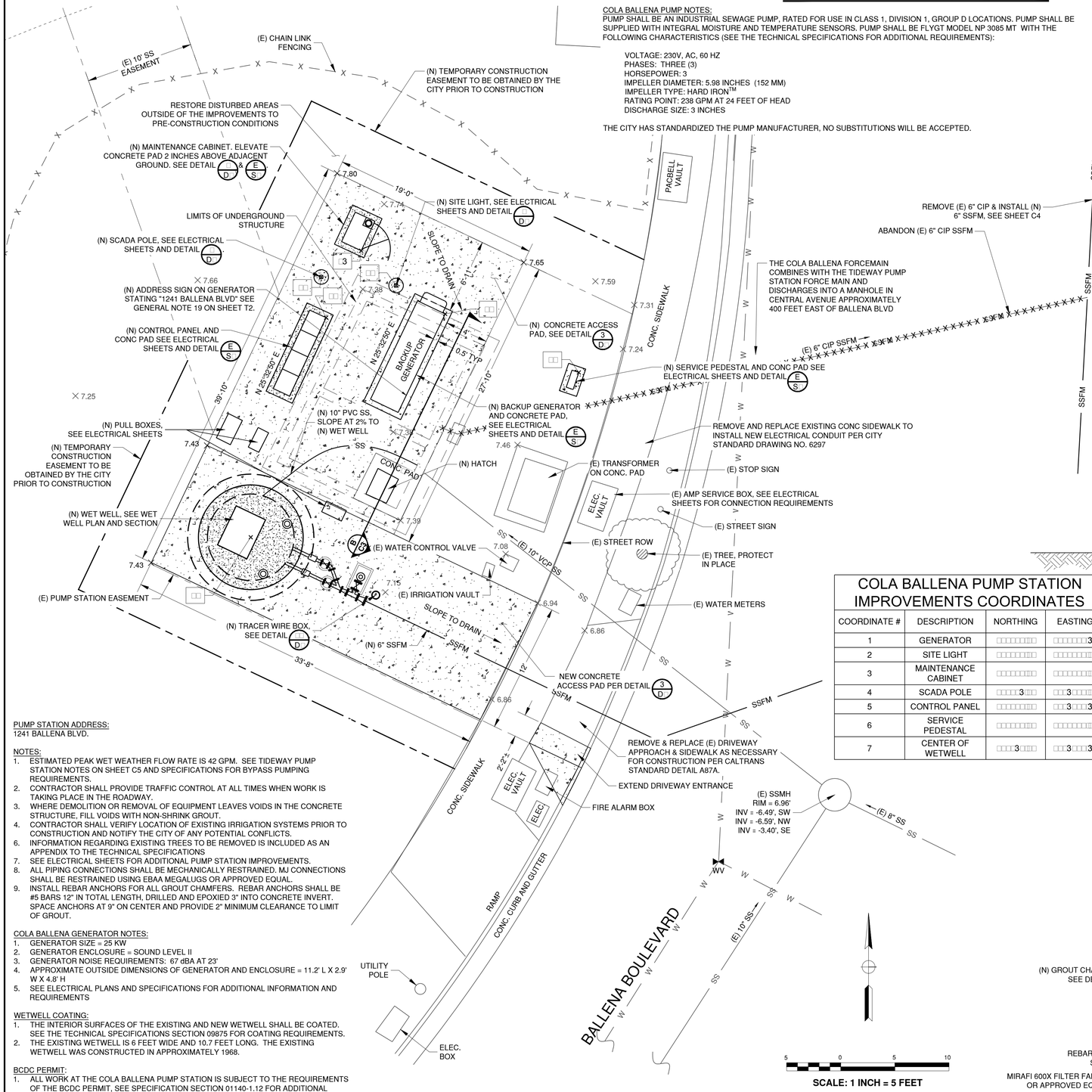

5 0 5 10

SCALE: 1 INCH = 5 FEET

IMPROVEMENT PLAN

SCALE: 1" = 5'

COLA BALLENA PUMP NOTES:
PUMP SHALL BE AN INDUSTRIAL SEWAGE PUMP, RATED FOR USE IN CLASS 1, DIVISION 1, GROUP D LOCATIONS. PUMP SHALL BE SUPPLIED WITH INTEGRAL MOISTURE AND TEMPERATURE SENSORS. PUMP SHALL BE FLYGT MODEL NP 3085 MT WITH THE FOLLOWING CHARACTERISTICS (SEE THE TECHNICAL SPECIFICATIONS FOR ADDITIONAL REQUIREMENTS):

VOLTAGE: 230V, AC, 60 HZ
PHASES: THREE (3)
HORSEPOWER: 3
IMPELLER DIAMETER: 5.98 INCHES (152 MM)
IMPELLER TYPE: HARD IRON™
RATING POINT: 238 GPM AT 24 FEET OF HEAD
DISCHARGE SIZE: 3 INCHES

THE CITY HAS STANDARDIZED THE PUMP MANUFACTURER, NO SUBSTITUTIONS WILL BE ACCEPTED.

COLA BALLENA PUMP STATION IMPROVEMENTS COORDINATES

COORDINATE #	DESCRIPTION	NORTHING	EASTING
1	GENERATOR	□□□□□□□□	□□□□□□□3□
2	SITE LIGHT	□□□□□□□□	□□□□□□□□3
3	MAINTENANCE CABINET	□□□□□□□□	□□□□□□□□
4	SCADA POLE	□□□□3□□□	□□3□□□□□
5	CONTROL PANEL	□□□□□□□□	□□3□□□3□
6	SERVICE PEDESTAL	□□□□□□□□	□□□□□□□□
7	CENTER OF WETWELL	□□□□3□□□	□□3□□□3□

PUMP STATION ADDRESS:
1241 BALLENA BLVD.

NOTES:
1. ESTIMATED PEAK WET WEATHER FLOW RATE IS 42 GPM. SEE TIDEWAY PUMP STATION NOTES ON SHEET C5 AND SPECIFICATIONS FOR BYPASS PUMPING REQUIREMENTS.
2. CONTRACTOR SHALL PROVIDE TRAFFIC CONTROL AT ALL TIMES WHEN WORK IS TAKING PLACE IN THE ROADWAY.
3. WHERE DEMOLITION OR REMOVAL OF EQUIPMENT LEAVES VOIDS IN THE CONCRETE STRUCTURE, FILL VOIDS WITH NON-SHRINK GROUT.
4. CONTRACTOR SHALL VERIFY LOCATION OF EXISTING IRRIGATION SYSTEMS PRIOR TO CONSTRUCTION AND NOTIFY THE CITY OF ANY POTENTIAL CONFLICTS.
6. INFORMATION REGARDING EXISTING TREES TO BE REMOVED IS INCLUDED AS AN APPENDIX TO THE TECHNICAL SPECIFICATIONS
7. SEE ELECTRICAL SHEETS FOR ADDITIONAL PUMP STATION IMPROVEMENTS.
8. ALL PIPING CONNECTIONS SHALL BE MECHANICALLY RESTRAINED. MJ CONNECTIONS SHALL BE RESTRAINED USING EBAA MEGALUGS OR APPROVED EQUAL.
9. INSTALL REBAR ANCHORS FOR ALL GROUT CHAMFERS. REBAR ANCHORS SHALL BE #5 BARS 12" IN TOTAL LENGTH, DRILLED AND EPOXIED 3" INTO CONCRETE INVERT. SPACE ANCHORS AT 9" ON CENTER AND PROVIDE 2" MINIMUM CLEARANCE TO LIMIT OF GROUT.

COLA BALLENA GENERATOR NOTES:
1. GENERATOR SIZE = 25 KW
2. GENERATOR ENCLOSURE = SOUND LEVEL II
3. GENERATOR NOISE REQUIREMENTS: 67 dBA AT 23'
4. APPROXIMATE OUTSIDE DIMENSIONS OF GENERATOR AND ENCLOSURE = 11.2' L X 2.9' W X 4.8' H
5. SEE ELECTRICAL PLANS AND SPECIFICATIONS FOR ADDITIONAL INFORMATION AND REQUIREMENTS

WETWELL COATING:
1. THE INTERIOR SURFACES OF THE EXISTING AND NEW WETWELL SHALL BE COATED. SEE THE TECHNICAL SPECIFICATIONS SECTION 09875 FOR COATING REQUIREMENTS.
2. THE EXISTING WETWELL IS 6 FEET WIDE AND 10.7 FEET LONG. THE EXISTING WETWELL WAS CONSTRUCTED IN APPROXIMATELY 1968.

BCDC PERMIT:
1. ALL WORK AT THE COLA BALLENA PUMP STATION IS SUBJECT TO THE REQUIREMENTS OF THE BCDC PERMIT, SEE SPECIFICATION SECTION 01140-1.12 FOR ADDITIONAL REQUIREMENTS AND RESTRICTIONS.
2. NESTING BIRDS MAY IMPACT THE ALLOWABLE CONSTRUCTION SEASON AT THE COLA BALLENA PUMP STATION AND FORCE MAIN, SEE SPECIFICATION SECTION 01140-1.13.

HOA CONTACT INFORMATION:
BALLENA BAY TOWNHOUSE ASSOCIATION NO. 1
DAVID BOONE, MASSINGHAM AND ASSOCIATES
(925) 405-4900

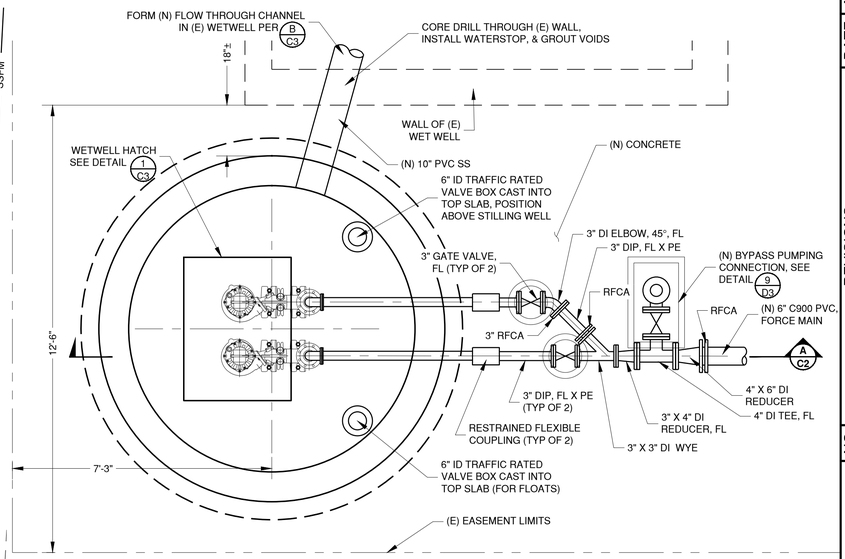

PUMP STATION IMPROVEMENT PLAN

SCALE: 1/2" = 1'

IMPROVEMENT SECTION A / C2

SCALE: 1/2" = 1'

NO	REVISIONS	DATE	APPR
1			
2			
3			
4			
5			
6			

PROFESSIONAL ENGINEER — QUALITY SERVICE — CIVIL — STATE OF CALIFORNIA

Schaaf & Wheeler
CONSULTING CIVIL ENGINEERS
1171 HOMESTEAD RD, STE. 255
SANTA CLARA, CA 95050
(408) 246-4848

CITY OF ALAMEDA
GROUP 4 - SEWERAGE PUMP STATION RENOVATIONS FOR RELIABILITY AND SAFETY IMPROVEMENTS
COLA BALLENA IMPROVEMENT PLAN

DATE:	11/27/19
SCALE:	AS SHOWN
DESIGN:	CLP
DRAWN:	CLP
CHECKED:	BLS

DWG 9425 CASE 35

C2

5 OF 70

#28 COLA BALLENA PUMP STATION

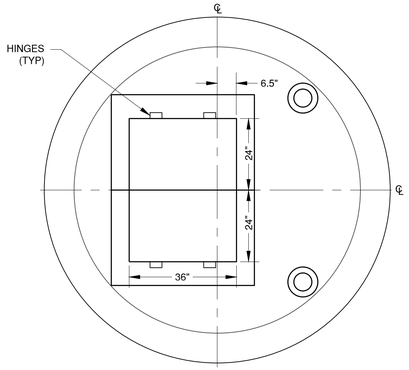

WETWELL HATCH NOTES:
1. ACCESS HATCH DIMENSIONS SHOWN ARE CLEAR OPENINGS.
2. ACCESS HATCH SHALL BE EQUIPPED WITH INTEGRAL FALL PROTECTION. CONTRACTOR SHALL COORDINATE INSTALLATION WITH WETWELL COATING AND ENSURE PROPER INSTALLATION.
3. TOP OF HATCH SHALL BE 1/4" DIAMOND PLATE
4. HATCH SHALL HAVE A CHANNEL FRAME WITH A 1-1/2" DRAIN COUPLER THAT DRAINS TO THE WETWELL
5. WETWELL ACCESS HATCH AND CONCRETE TOP SHALL BE RATED FOR UNINTENDED H-20 LOADING.
6. HATCH SHALL BE EJ PRODUCT NUMBER H364819910, OR APPROVED EQUAL.
7. HATCH SHALL BE EQUIPPED WITH HYDRAULIC LIFT SPRINGS TO ASSIST WITH OPENING.
8. HATCH SHALL HAVE A RECESSED PADLOCK CLIP FOR LOCKING
9. ALL HARDWARE AND HINGES SHALL BE SS

WETWELL HATCH DETAIL 1/C3
SCALE: 1/2" = 1'

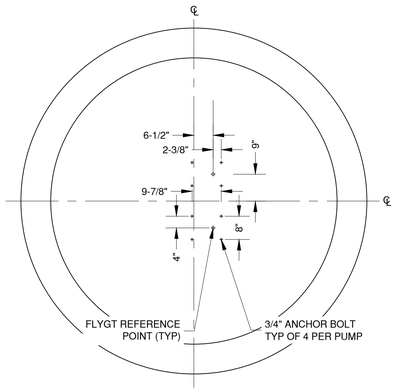

PUMP MOUNTING DETAIL 2/C3
SCALE: 1/2" = 1'

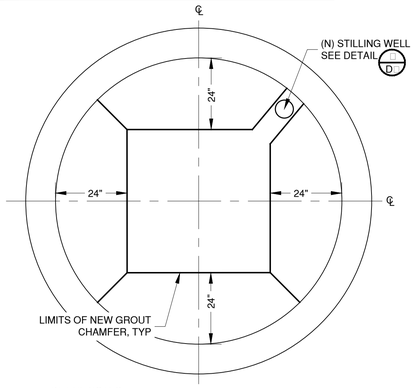

DETAIL NOTES:
1. ALL NEW CHAMFERS SHALL BE ANCHORED WITH REBAR. REBAR ANCHORS SHALL BE #5 BARS 12" LONG DRILLED AND EPOXIED 3" INTO CONCRETE. SPACE ANCHORS AT 9" MAX O.C. AND PROVIDE 2" MIN. CLEARANCE TO LIMIT OF GROUT.

WETWELL CHAMFER DETAIL 3/C3
SCALE: 1/2" = 1'

WETWELL COATING:
1. THE INTERIOR SURFACES OF THE EXISTING AND NEW WETWELL SHALL BE COATED. SEE THE TECHNICAL SPECIFICATIONS SECTION 09875 FOR COATING REQUIREMENTS.
2. THE EXISTING WETWELL IS 6 FEET WIDE AND 10.7 FEET LONG. THE EXISTING WETWELL WAS CONSTRUCTED IN APPROXIMATELY 1968.

ACCESS HATCH SPECIFICATIONS FOR EXISTING WETWELL:
1. ACCESS HATCH SHALL BE MODEL H24301001 AS MANUFACTURED EJ, OR APPROVED EQUAL.
2. HATCH SHALL BE RATED FOR PEDESTRIAN LOADING.
3. HATCHES SHALL BE TOP MOUNTED AND BOLTED TO EXISTING STRUCTURE PER HATCH MANUFACTURER'S RECOMMENDATIONS.
4. THE PUMP ACCESS HATCHES SHALL HAVE INTERIOR CLEAR DIMENSIONS EQUAL TO THE EXISTING OPENING SIZE.
5. APPROXIMATE CLEAR OPEN DIMENSION IS 24"X30", CONTRACTOR SHALL FIELD VERIFY ALL DIMENSIONS.

SHEET NOTES:
1. BACKFILL LIFTS SHALL NOT EXCEED 4 FT. ALLOW EACH LIFT TO CURE PRIOR TO PLACING SUBSEQUENT LIFTS.

BCDC PERMIT:
1. ALL WORK AT THE COLA BALLENA PUMP STATION IS SUBJECT TO THE REQUIREMENTS OF THE BCDC PERMIT, SEE SPECIFICATION SECTION 01140-1.12 FOR ADDITIONAL REQUIREMENTS AND RESTRICTIONS.
2. NESTING BIRDS MAY IMPACT THE ALLOWABLE CONSTRUCTION SEASON AT THE COLA BALLENA PUMP STATION AND FORCE MAIN, SEE SPECIFICATION SECTION 01140-1.13.

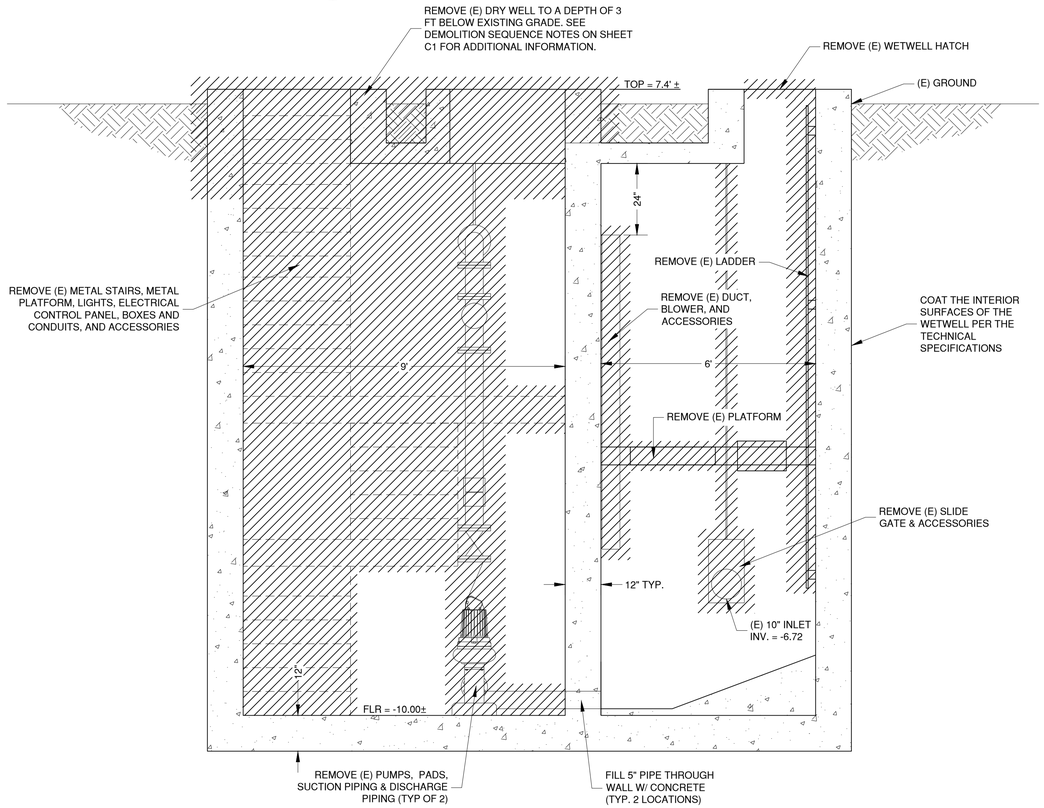

DEMOLITION SECTION A/C3
SCALE: 1/2" = 1'

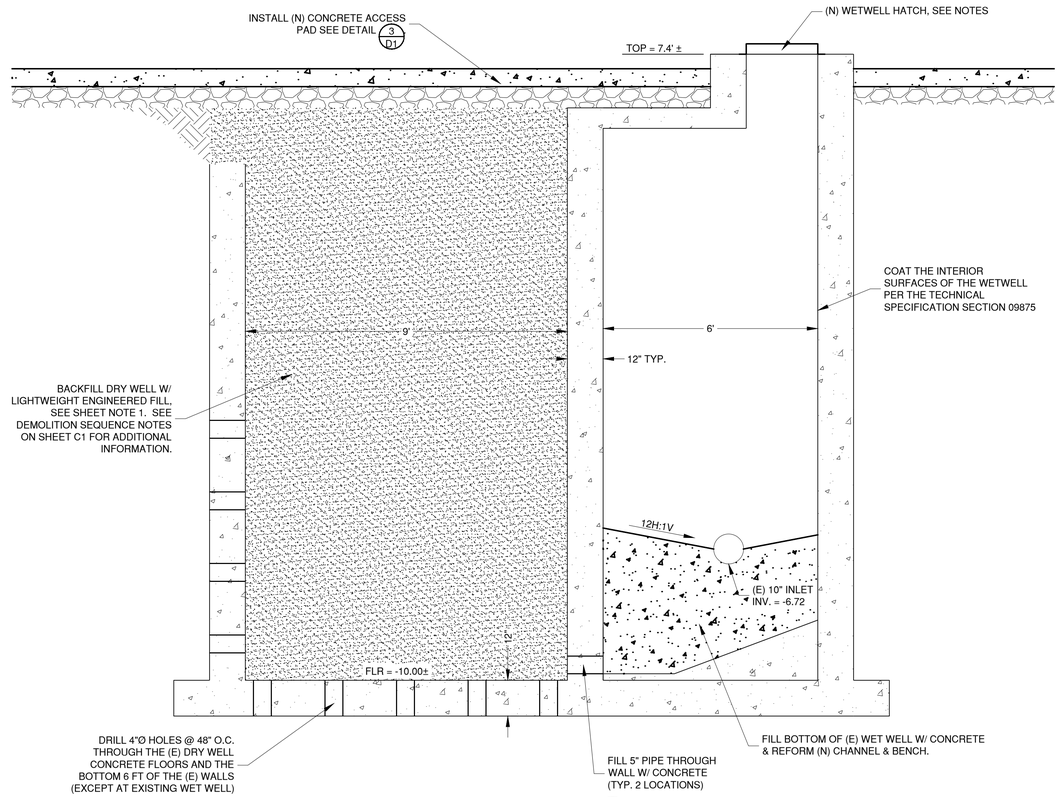

IMPROVEMENT SECTION B/C3
SCALE: 1/2" = 1'

NO	REVISIONS	DATE	APPR
1			
2			
3			
4			
5			
6			

Schaaf & Wheeler
CONSULTING CIVIL ENGINEERS
1171 HOMESTEAD RD, STE. 255
SANTA CLARA, CA 95050
(408) 246-4848

CITY OF ALAMEDA
GROUP 4 - SEWERAGE PUMP STATION RENOVATIONS FOR RELIABILITY AND SAFETY IMPROVEMENTS
COLA BALLENA DEMOLITION & IMPROVEMENT DETAILS

DATE:	11/27/19
SCALE:	AS SHOWN
DESIGN:	CLP
DRAWN:	CLP
CHECKED:	BLS

DWG 9425 CASE 35

C3

#28 COLA BALLENA PUMP STATION

NOTES:
1. POTHOLE (E) UTILITY & SUMBIT POTHOLE DATA TO THE CITY PRIOR TO CONSTRUCTION OF SSFM. NOTIFY CITY OF ANY POTENTIAL UTILITY CONFLICTS.
2. INSTALL 6" DIP & EBAA IRON FLEX-TEND OR APPROVED, SEE DETAIL 2/C5.
3. ABANDON (E) SSFM BY PLUGGING ENDS W/ 2 FT MIN. OF CONCRETE & FILLING W/ CDF OR SAND.
4. (E) SURVEY MONUMENT, PROTECT IN PLACE.
5. (E) SURVEY MONUMENT, REMOVE & REPLACE AS NECESSARY FOR CONSTRUCTION PER CITY STANDARD DETAIL DWG 3174, CASE 54.
6. ALL MAJOR BENDS SHALL BE DI W/ MECHANICAL RESTRAINTS UNLESS NOTED OTHERWISE.
7. ESTIMATED PEAK WET WEATHER FLOW RATE AT COLA BALLENA PUMP STATION IS 42 GPM. CONTRACTOR MAY INSTALL TEMPORARY BYPASS PIPING ON TOP OF THE (E) BRIDGE SIDEWALK. CONTRACTOR SHALL NOT INSTALL ANY ABOVE GROUND PIPING ACROSS SIDEWALKS OR ROADWAYS. SEE SPECIFICATIONS AND TIDEWAY PUMP STATION NOTES FOR BYPASS PUMPING REQUIREMENTS.
8. ACCESS UNDER THE BRIDGE IS LIMITED. CONTRACTOR SHALL NOT DISTURB THE AREA BELOW THE MEAN HIGH WATER LINE. ACCESS TO INSTALL THE NEW SSFM WILL REQUIRE CONSTRUCTION OF TEMPORARY ACCESS PLATFORMS AND/OR THE USE OF A BARGE PLACED UNDER THE BRIDGE. SEE SPECIFICATION SECTION 01140-1.14.
9. MINOR SSFM HORIZONTAL ALIGNMENT ADJUSTMENTS CAN BE MADE AS NECESSARY TO AVOID (E) CURB.
10. CONTRACTOR SHALL CONFIRM ELEVATION OF (E) TIDEWAY SSFM AT CONNECTION POINT PRIOR TO CONSTRUCTION OF SSFM.
11. SEE DETAIL 8/D1 FOR INSTALLATION OF SSFM. INSTALL ACONCRETE SADDLE PER DETAIL 6/D1 WHERE CLEARANCE BETWEEN (E) UTILITY & (N) SSFM IS LESS THAN 12".

TIDEWAY PUMP STATION NOTES:
1. TIDEWAY PUMP STATION PWWF = 243 GPM. TIDEWAY PUMP RATE = 350 GPM @ 22.8 FT.
2. THE COLA BALLENA FORCE MAIN CONNECTS AND COMBINES WITH THE TIDEWAY PUMP STATION FORCE MAIN WHICH EXTENDS TO THE DISCHARGE MANHOLE IN CENTRAL AVE, LOCATED APPROXIMATELY 420 FT EAST OF THE INTERSECTION OF CENTRAL AVE AND BALLENA BOULEVARD.
3. THERE ARE NO EXISTING MEANS OF ISOLATING THE TIDEWAY FORCE MAIN FROM THE COLA BALLENA FORCE MAIN. CONTRACTOR SHALL COORDINATE W/ THE CITY FOR TEMPORARY SHUTDOWNS OF THE TIDEWAY PUMP STATION AS NECESSARY TO CONSTRUCT THE IMPROVEMENTS. SHUT DOWNS SHALL NOT EXCEED 5 HOURS UNLESS ALTERNATE MEANS OF CONVEYING THE INFLOWS ARE PROVIDED BY THE CONTRACTOR. CONTRACTOR SHALL MONITOR UPSTREAM MANHOLES TO ENSURE NO OVERFLOWS OCCUR DURING SHUTDOWN.

BCDC PERMIT:
1. ALL WORK AT THE COLA BALLENA PUMP STATION IS SUBJECT TO THE REQUIREMENTS OF THE BCDC PERMIT, SEE SPECIFICATION SECTION 01140-1.12 FOR ADDITIONAL REQUIREMENTS AND RESTRICTIONS.
2. NESTING BIRDS MAY IMPACT THE ALLOWABLE CONSTRUCTION SEASON AT THE COLA BALLENA PUMP STATION AND FORCE MAIN, SEE SPECIFICATION SECTION 01140-1.13.

COLA BALLENA BASS OF BEARING

MONUMENT LINE OF COLA BALLENA PER PARCEL MAP 3011, BOOK 59, PAGE 8.
MON #2008 TO #2007 N 46° 19' 39" E, 553.255' (553.13' RECORD) MONUMENT TO MONUMENT
ACTUAL N,E: #2007 = N467106.73 E1484068.92

COLA BALLENA BENCHMARK

HELD SSMH #2009 RIM AS SHOWN ON CITY'S SYSTEM MAP ELEV. = 6.34'

FORCE MAIN COORDINATE TABLE				
POINT OF BEGINNING	STATION	BEARING/RADIUS	LENGTH (FT)	DESCRIPTION
N467139.22 E1483992.39	-	-	-	CENTER OF WETWELL
N467138.54 E1483992.05	0+00	S64°29'39"E	41.83	
N467120.52 E1484029.82	0+41.83	N70°30'21"E	40.74	45° HORIZ. BEND
N467134.12 E1484068.21	0+82.57	N3°5'3"E	62.75	67.5° HORIZ. BEND
N467196.77 E1484071.59	1+45.32	N3°5'3"E	141.53	(E) BRIDGE ABUTMENT PENETRATION (APPROX.)
N467338.09 E1484079.20	2+86.85	N2°59'29"E	143.07	(E) BRIDGE ABUTMENT PENETRATION (APPROX.)
N467480.97 E1484086.67	4+29.92	180'	27	CURVE C1
N467507.80 E1484089.35	4+56.93	N8°25'23"E	4.55	
N467512.31 E1484090.01	4+61.49	180'	27	CURVE C2
N467539.13 E1484092.69	4+88.61	N2°59'29"E	64.58	
N467603.63 E1484096.06	5+53.18	N41°31'8"W	7.84	45° HORIZ. BEND
N467609.50 E1484090.86	5+61.02	-	-	CL OF TIDEWAY SSFM (APPROX.)

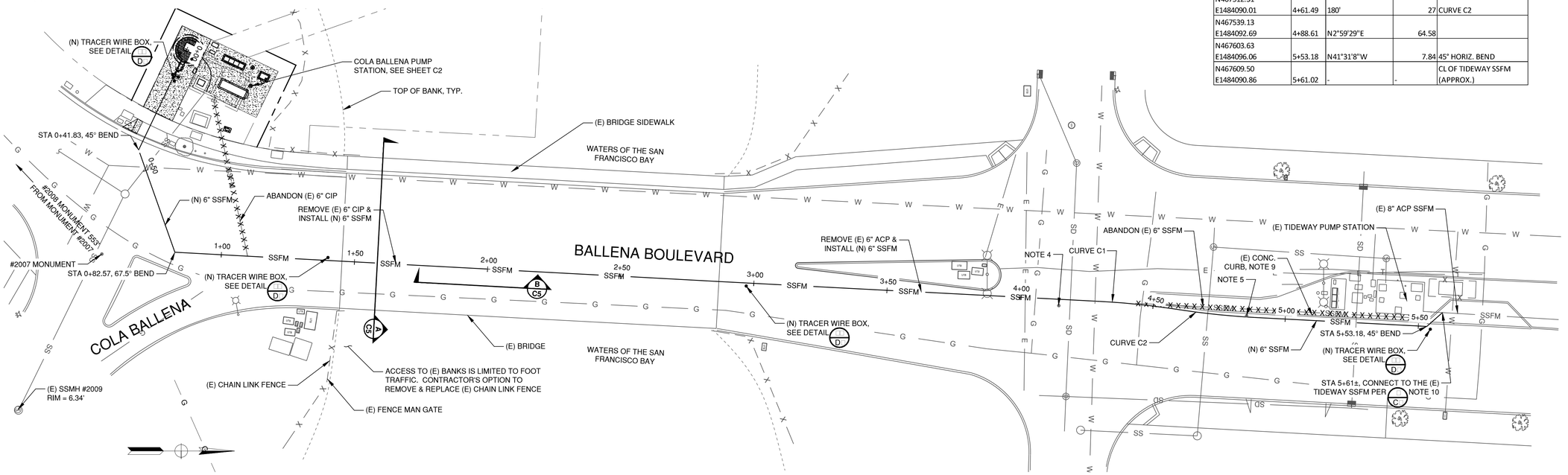

SCALE: 1 INCH = 20 FEET

FORCE MAIN PLAN

SCALE: 1" = 20'

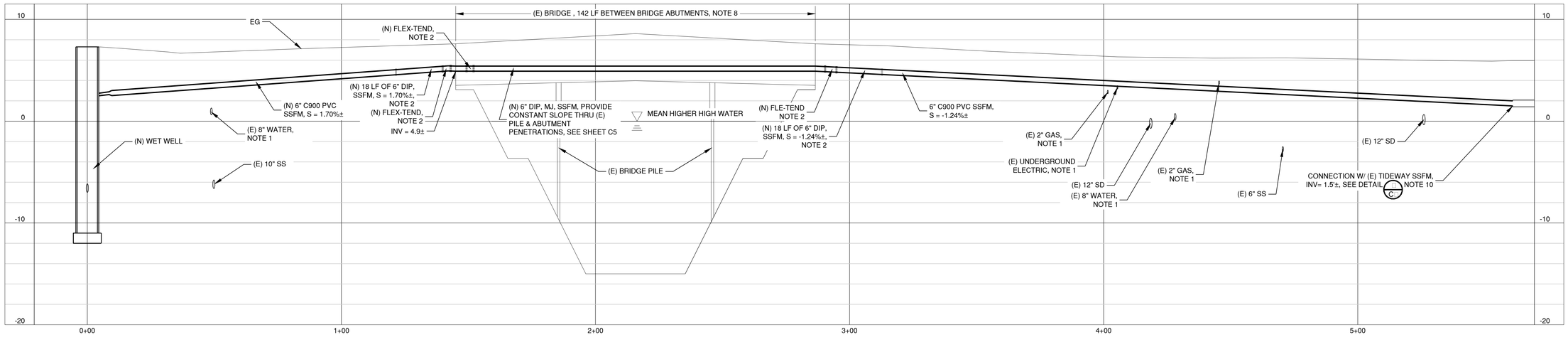

FORCE MAIN PROFILE

HORIZONTAL SCALE: 1" = 20'
VERTICAL SCALE: 1" = 5'

REVISIONS

NO	DATE	APPR
1		
2		
3		
4		
5		
6		

REGISTERED PROFESSIONAL ENGINEER — CHRISTOPHER L. PEDERSEN — CIVIL — STATE OF CALIFORNIA

Schaaf & Wheeler
CONSULTING CIVIL ENGINEERS
1171 HOMESTEAD RD, STE. 255
SANTA CLARA, CA 95050
(408) 246-4848

CITY OF ALAMEDA
GROUP 4 - SEWERAGE PUMP STATION RENOVATIONS FOR RELIABILITY AND SAFETY IMPROVEMENTS
COLA BALLENA FORCE MAIN

DATE:	SCALE:	DESIGN:	DRAWN:	CHECKED:
11/27/19	AS SHOWN	CLP	CLP	BLS

DWG 9425 CASE 35

C4

7 OF 70

#28 COLA BALLENA PUMP STATION

SHEET NOTES:
1. CONSTRUCT (N) 6" SSFM THROUGH THE (E) BRIDGE PENETRATIONS.

BCDC PERMIT:
1. ALL WORK AT THE COLA BALLENA PUMP STATION IS SUBJECT TO THE REQUIREMENTS OF THE BCDC PERMIT, SEE SPECIFICATION SECTION 01140-1.12 FOR ADDITIONAL REQUIREMENTS AND RESTRICTIONS.
2. NESTING BIRDS MAY IMPACT THE ALLOWABLE CONSTRUCTION SEASON AT THE COLA BALLENA PUMP STATION AND FORCE MAIN, SEE SPECIFICATION SECTION 01140-1.13.

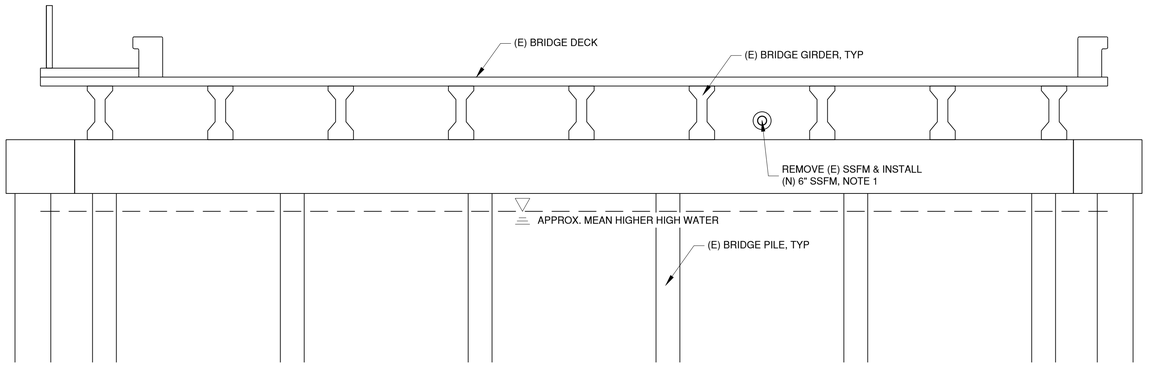

BRIDGE SECTION A (C5)
SCALE: 1/4" = 1'

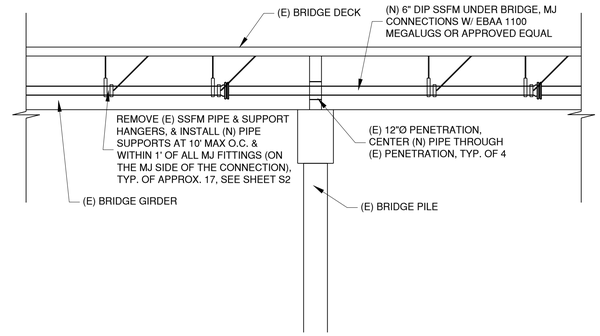

BRIDGE SECTION B (C5)
SCALE: 1/4" = 1'

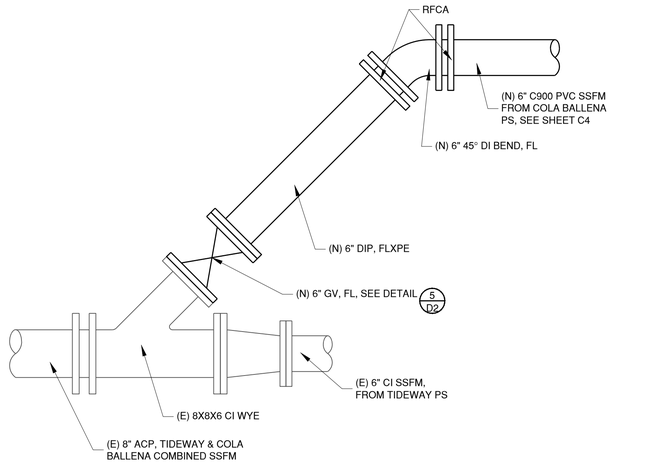

TIDEWAY SSFM CONNECTION 1 (C5)
SCALE: 1" = 1'

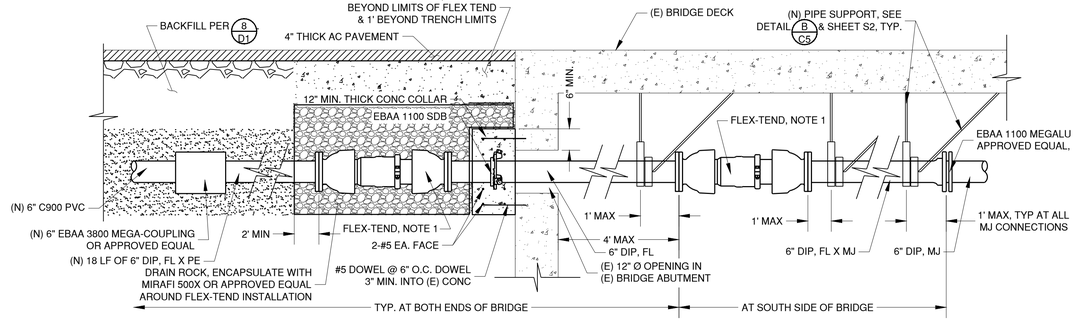

NOTE:
1. A TOTAL OF THREE (3) 6" EBAA ASSEMBLY 406 F20 FLEX-TENDS ARE REQUIRED. ONE FLEX-TEND SHALL BE INSTALLED JUST OUTSIDE OF THE BRIDGE LIMITS ON EACH SIDE AND THE THIRD FLEX-TEND SHALL BE INSTALLED UNDER THE SOUTH SIDE OF THE BRIDGE AS NOTED.

FORCE MAIN EXPANSION JOINT DETAIL 2 (C5)
SCALE: NTS

NO	DATE	APPR	REVISIONS
1			
2			
3			
4			
5			
6			
7			

Schaaf & Wheeler
CONSULTING CIVIL ENGINEERS
1171 HOMESTEAD RD, STE. 255
SANTA CLARA, CA 95050
(408) 246-4848

CITY OF ALAMEDA
GROUP 4 - SEWERAGE PUMP STATION RENOVATIONS FOR RELIABILITY AND SAFETY IMPROVEMENTS
COLA BALLENA FORCE MAIN DETAILS

DATE: 11/27/19
SCALE: AS SHOWN
DESIGN: CLP
DRAWN: CLP
CHECKED: BLS

DWG 9425 CASE 35

C5

8 OF 70

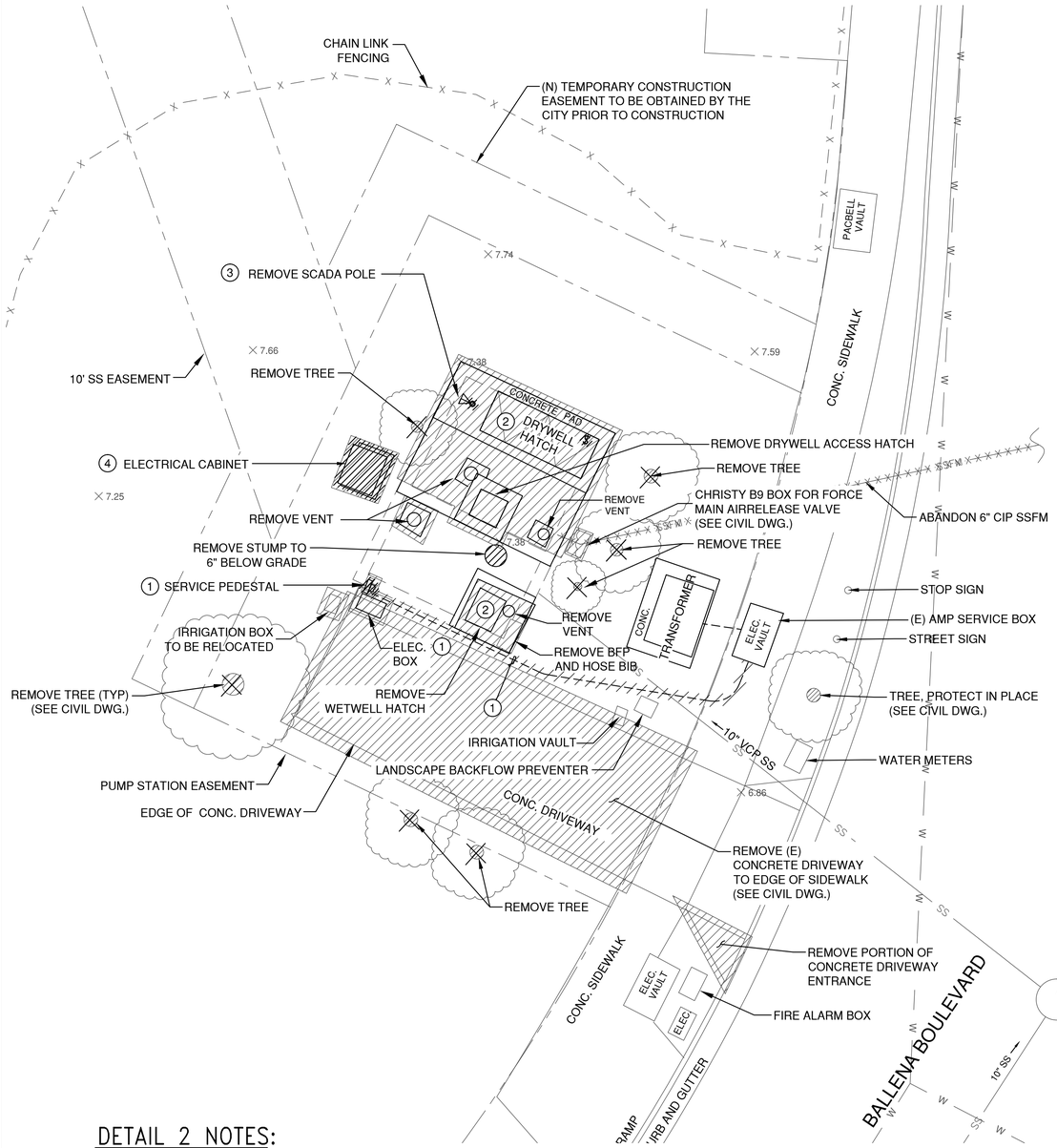

DETAIL 2 NOTES:

1. COORDINATE WITH ALAMEDA MUNICIPAL POWER (AMP) FOR REMOVAL OF EXISTING METER. REMOVE ALL CONDUCTORS UP TO (E) AMP SERVICE TRANSFORMER. ABANDON (E) SERVICE CONDUIT IN-PLACE.
2. REMOVE ALL CONDUIT, JUNCTION BOXES, DEVICES, WIRING, CONTROLS AND BUBBLER SYSTEM THAT MAY EXIST IN DRY & WET WELL. REFER ALSO TO ENLARGED PLANS. DISCONNECT AND REMOVE (E) PUMPS.
3. REMOVE AND DISPOSE OF (E) SCADA POLE. RELOCATE (E) ANTENNA TO THE (N) SCADA POLE. SEE DWG. E4 FOR EXACT LOCATION.
4. COORDINATE WITH CITY FOR REMOVAL OF DEFUNCT ELECTRICAL CABINET.

2 — COLA BALLENA SITE PLAN
SCALE: 1" = 5'-0"

0 5' 10' 15'
SCALE: 1" = 5'-0"

GENERAL NOTES:

1. NOT ALL DEVICES OR CONDUIT OR OPENINGS TO THE EXTERIOR ARE NECESSARILY SHOWN. IT IS THE INTENTION OF THIS PROJECT TO LEAVE THE EXISTING WELLS COMPLETELY CLEAR AND FREE OF ANY AND ALL EXISTING ELECTRICAL APPARATUS THAT IS NOT IN USE OR THAT IS BEING REPLACED BY THIS PROJECT. THIS INCLUDES DEVICES, CONDUITS, BOXES, IN-GROUND BOXES SERVING THE WELLS BUT LOCATED OUTSIDE THE WELLS AND ANY OTHER SYSTEM THAT EXIST BUT WILL NOT BE USED OR REPLACED AT THE COMPLETION OF THIS PROJECT WHETHER SHOWN SPECIFICALLY ON THESE PLANS FOR REMOVAL OR NOT.
2. CITY RESERVES THE RIGHT OF REFUSAL ON ANY OF THE EXISTING EQUIPMENT AND DEVICES BEING REMOVED IN THIS PROJECT. ANY EQUIPMENT OR DEVICES NOT WANTED BY THE CITY SHALL BECOME THE PROPERTY OF THE CONTRACTOR AND SHALL BE REMOVED FROM THE PROJECT SITE.
3. SEAL ALL OPENINGS (FOR CONDUIT AND ELECTRICAL DEVICES) TO THE EXTERIOR OF THE WET WELL, AND BETWEEN THE DRY AND WET WELL.

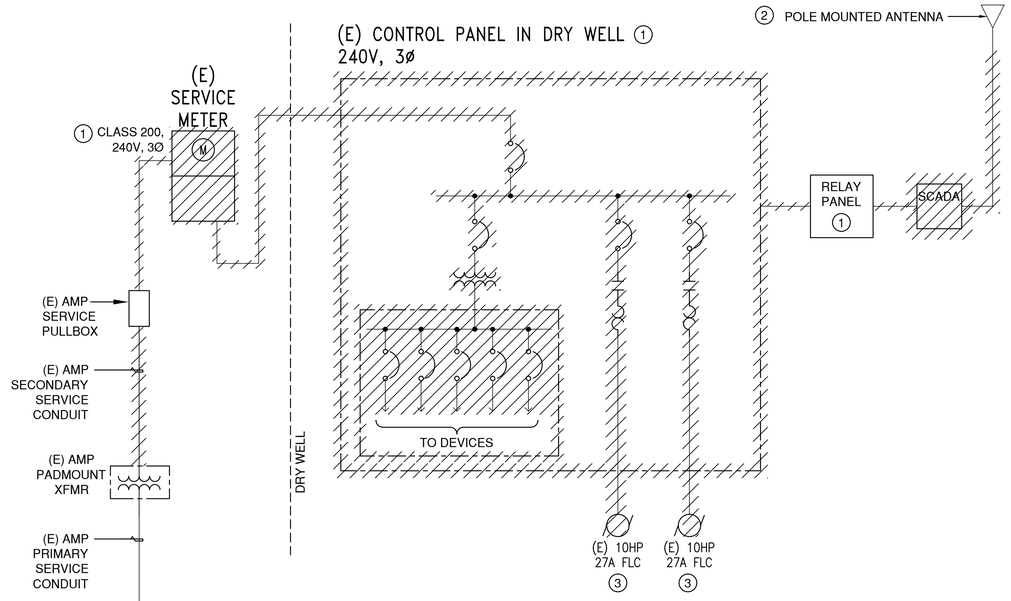

DETAIL 1 NOTES:

1. REMOVE (E) SERVICE AND CONTROL PANEL INCLUDING ALL ENCLOSED EQUIPMENT AND DEVICES. VERIFY CONNECTIONS AND EXISTING CONDITIONS TO THE EXTENT REQUIRED TO SAFELY REMOVE EQUIPMENT AND DEVICES.
2. DISCONNECT AND RETAIN SCADA ANTENNA FOR RE-USE.
3. DISCONNECT AND REMOVE (E) PUMPS.

1 — COLA BALLENA ONE-LINE DIAGRAM
SCHEMATIC

NO	REVISIONS	DATE	APPR
1			
2			
3			
4			
5			
6			
7			

REGISTERED PROFESSIONAL ENGINEER — JULIO C. HERDOCIA — No. 9580 — 9/30/20 — ELECTRICAL — STATE OF CALIFORNIA

engineers, inc.
3350 scott blvd., bldg. 11
santa clara, ca. 95054
(408) 986-8558
FAX (408) 986-9627
PROJECT NO. 18697-06

CITY OF ALAMEDA
GROUP 4 - SEWERAGE PUMP STATION RENOVATIONS FOR RELIABILITY AND SAFETY IMPROVEMENTS
COLA BALLENA PUMP STATION
ONE-LINE & SITE PLAN - REMOVAL WORK

DATE: 11/27/19
SCALE: AS SHOWN
DESIGN: JCH
DRAWN: VDM
CHECKED: JCH

DWG 9425 CASE 35

E2

09 OF **70**

File: M:\18697-06 Alameda Pumps - Group 4\09_COB_E2.dwg, 11/27/2019 3:14 PM, Last saved: Vuong, PlotDate: 11/27/2019 3:40 PM By: Vuong Mai, Plot scale: 1:2.5849, Plot Size: ANSI A (8.50 x 11.00 Inches)
Xrefs: SHEET_S&W_Group-4 Cola Ballena and Marina Village_0723319 Group4_Electrical_Removal-work

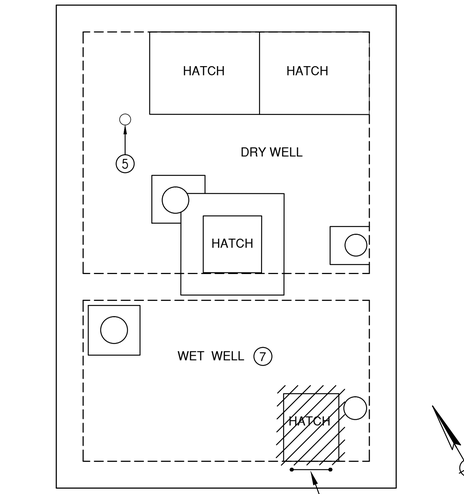

NOTE: SEAL ALL EXISTING OPENINGS TO EXTERIOR OF WET WELL AND BETWEEN WET WELL AND DRY WELL UPON REMOVAL OF EQUIPMENT AND CONDUITS.

1 PUMP STATION – ROOF REMOVAL WORK

SCALE: 3/8"=1'–0"

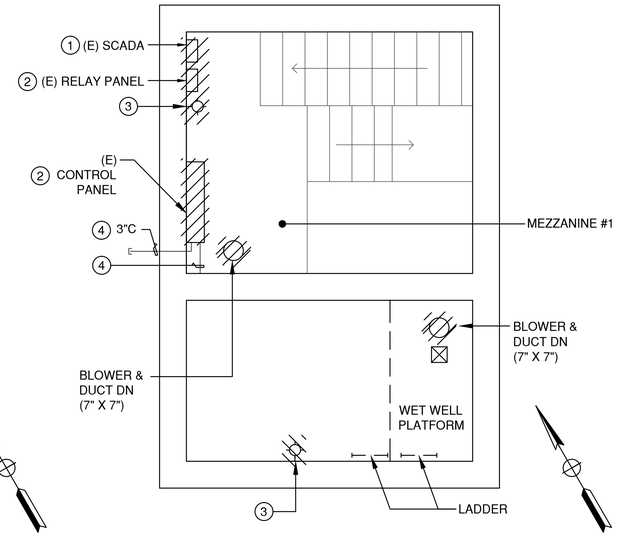

2 DRY/WET WELL – MEZZANINE #1 REMOVAL WORK

SCALE: 3/8"=1'–0" (APPROXIMATELY 8'–8" BELOW GRADE)

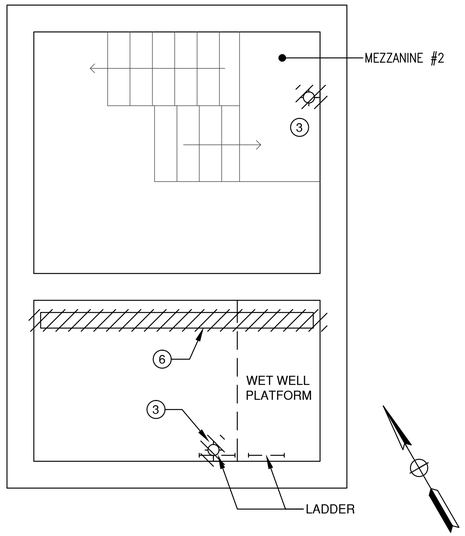

3 DRY/WET WELL – MEZZANINE #2 REMOVAL WORK

SCALE: 3/8"=1'–0" (APPROXIMATELY 12'–8" BELOW GRADE)

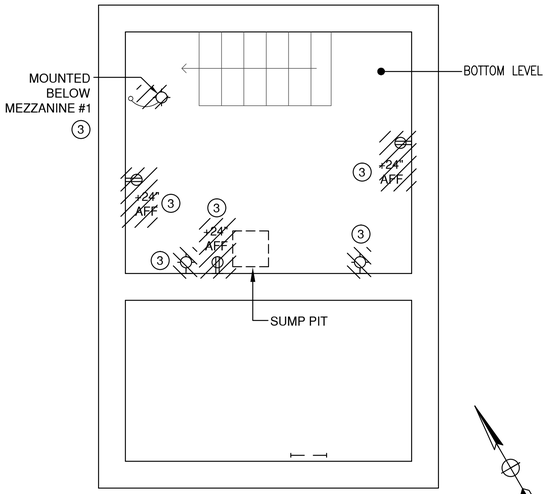

4 DRY WELL – BOTTOM REMOVAL WORK

SCALE: 3/8"=1'–0" (APPROXIMATELY 17'–6" BELOW GRADE)

GENERAL NOTES:

1. NOT ALL DEVICES OR CONDUIT OR OPENINGS TO THE EXTERIOR ARE NECESSARILY SHOWN. IT IS THE INTENTION OF THIS PROJECT TO LEAVE THE EXISTING WELLS COMPLETELY CLEAR AND FREE OF ANY AND ALL EXISTING ELECTRICAL APPARATUS THAT IS NOT IN USE OR THAT IS BEING REPLACED BY THIS PROJECT. THIS INCLUDES DEVICES, CONDUITS, BOXES, IN-GROUND BOXES SERVING THE WELLS BUT LOCATED OUTSIDE THE WELLS AND ANY OTHER SYSTEM THAT EXIST BUT WILL NOT BE USED OR REPLACED AT THE COMPLETION OF THIS PROJECT WHETHER SHOWN SPECIFICALLY ON THESE PLANS FOR REMOVAL OR NOT.
2. SEAL ALL OPENINGS (FOR CONDUIT AND ELECTRICAL DEVICES) TO THE EXTERIOR OF THE WET WELL AND BETWEEN THE DRY AND WET WELL.

SHEET NOTES:

1. REMOVE EXISTING SCADA SYSTEM.
2. REMOVE RELAY AND CONTROL PANELS.
3. REMOVE EXISTING LIGHTS, RECEPTACLES, ASSOCIATED WIRE AND CONDUIT. SEAL OPENINGS FOR RECESSED BOXES IN WET WELL.
4. REMOVE (E) 3" CONDUIT TO METER AND (5) 1 1/2" CONDUIT. SEAL OPENINGS BETWEEN WET WELL AND DRY WELL UPON REMOVAL OF CONDUITS.
5. REMOVE EXISTING COAX CABLE UP TO POLE MOUNTED ANTENNA.
6. (E) BLOWER FAN DUCT TO BE REMOVED. SEE CIVIL DRAWINGS FOR DETAIL INFORMATION.
7. SEE CIVIL DWG. C3 FOR WET WELL NEW WORK REQUIREMENTS.

0 1 2 4 6 8

SCALE: 3/8"=1'–0"

NO	REVISIONS	DATE	APPR
1			
2			
3			
4			
5			
6			
7			

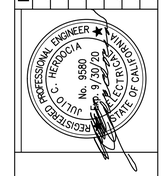

nolte engineers, inc.
3350 scott blvd., bldg. 11
santa clara, ca 95054
(408) 986-8558
FAX (408) 986-9627
PROJECT NO. 18697-06

CITY OF ALAMEDA

GROUP 4 - SEWERAGE PUMP STATION RENOVATIONS FOR RELIABILITY AND SAFETY IMPROVEMENTS

COLA BALLENA PUMP STATION

DRYWELL PLAN & DETAILS - REMOVAL WORK

DATE:	11/27/19	SCALE:	AS SHOWN	DESIGN:	JCH	DRAWN:	VDM	CHECKED:	JCH

DWG 9425 CASE 35

E3

10 OF **70**

File: M:\18697-06 Alameda Pumps – Group 4\10_COB_E3.dwg, 11/27/2019 3:14 PM, Last saved: Vuong, PlotDate: 11/27/2019 3:41 PM By: Vuong Mai, Plot scale: 1:2.5849, Plot Size: ANSI A (8.50 x 11.00 Inches)
Xrefs: Group4_Cola_Ballena_dry-well-equip-room SHEET_S&W_Group-4

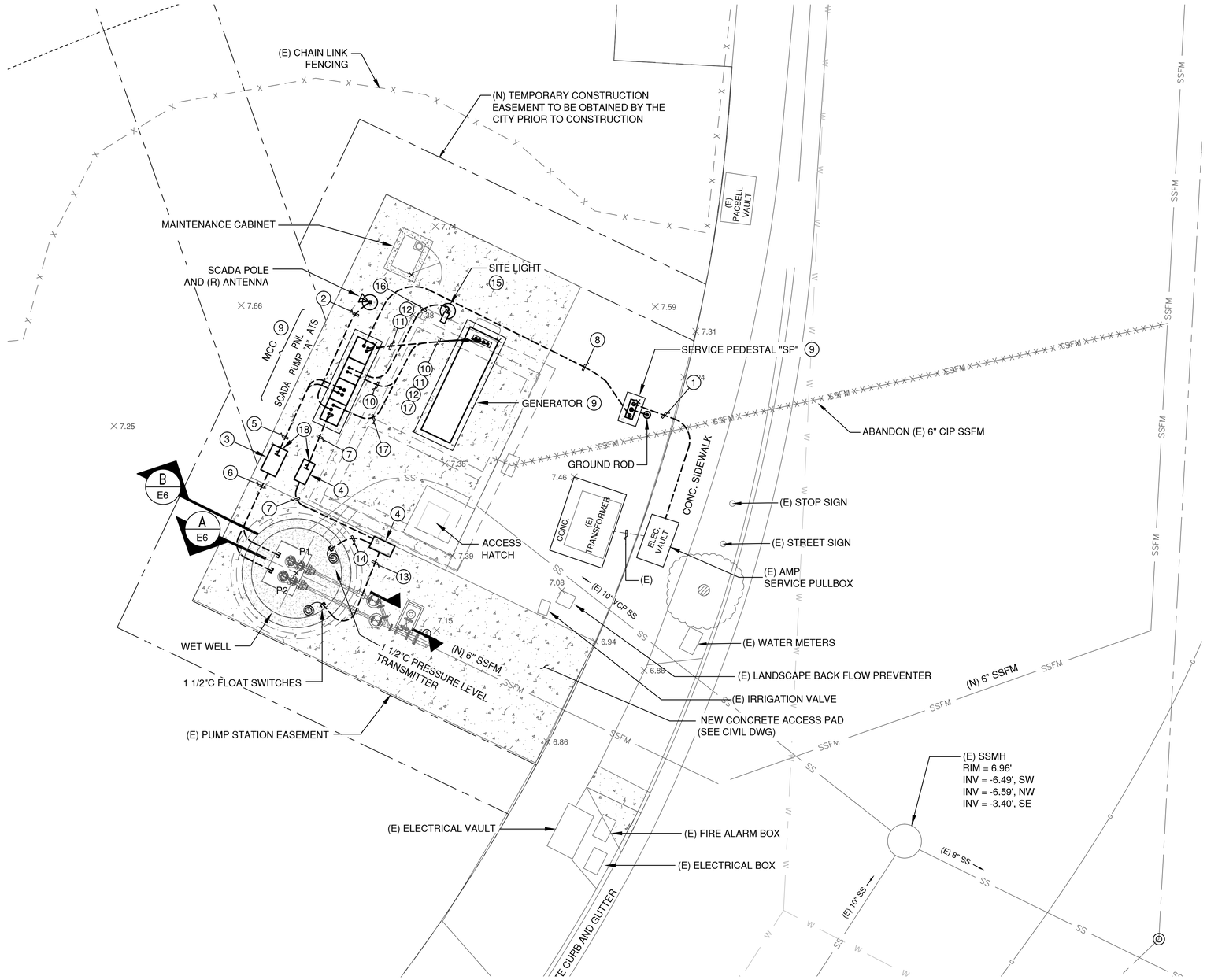

1 — COLA BALLENA SITE PLAN

SCALE: 1" = 5'-0"

0 5' 10' 15'

SCALE: 1" = 5'-0"

GENERAL NOTES:

1. ALL WORK SHOWN ON THIS DRAWING IS NEW WORK TO BE PROVIDED UNLESS INDICATED (E) OR EXISTING OR (R) RELOCATED.

SHEET NOTES:

(1) PROVIDE 2"C CONDUIT. INSTALL IN ACCORDANCE WITH ALAMEDA MUNICIPAL POWER (AMP) STANDARD DETAIL 1-L-412. SEE ONE-LINE DIAGRAM FOR CABLE SIZE. REPLACE SIDEWALK IN KIND FROM SCORE MARK TO SCORE MARK.

(2) PROVIDE 2"C FOR COAX CABLE CONNECTION FROM (R) ANTENNA MOUNTED ON (N) SCADA POLE TO (N) SCADA SYSTEM. SEE CIVIL PLANS FOR POLE DETAILS.

(3) PROVIDE IN GROUND PULL BOX FOR PUMP POWER AND MONITORING CONTROL CIRCUITS, SIZE 6T, CHRISTY B1730 WITH 12" EXTENSION (17" x 30") REINFORCED TRAFFIC RATED CONCRETE BOX WITH BOLT DOWN, STEEL CHECKER PLATED COVER.

(4) PROVIDE IN GROUND PULL BOX FOR INSTRUMENTATION, SIZE 5T, CHRISTY B1324 WITH 12" EXTENSION (13" x 24") REINFORCED TRAFFIC RATED CONCRETE BOX WITH BOLT DOWN, STEEL CHECKER PLATED COVER.

(5) PROVIDE (2) 1" PVC COATED RSC CONDUITS FOR PUMP POWER, (2) 1" PVC COATED RSC CONDUIT FOR MOISTURE AND TEMPERATURE MONITORING CONTROL CIRCUITS FOR WET WELL PUMPS. SEE ONE-LINE DIAGRAM FOR CABLE SIZES.

(6) PROVIDE (2) 2 1/2" PVC COATED RSC FOR PUMP CABLING.

(7) PROVIDE (2) 1 1/2"C PVC COATED RSC FOR PRESSURE LEVEL TRANSMITTER AND HIGH & LOW FLOAT CABLES.

(8) PROVIDE 1 1/2"C FOR FEEDER TO MCC / ATS SECTION. SEE ONE-LINE DIAGRAM FOR FEEDER CABLE SIZE.

(9) COORDINATE EXACT CONDUIT STUB-UP LOCATIONS WITH EQUIPMENT MANUFACTURER SHOP DRAWINGS.

(10) PROVIDE 1"C CONDUIT WITH
2 #10, PNL "A", CKT 4 FOR BATTERY CHARGER
2 #10, PNL "A", CKT 2 FOR JACKET WATER HEATER
1 #10 (G)
SEE DWG. E5 FOR PANEL "A" SCHEDULE.

(11) PROVIDE 2 #12 IN 1"C FOR GENERATOR START SIGNAL WIRES.

(12) PROVIDE 1 1/2"C FOR FEEDER FROM ATS TO GENERATOR. SEE ONE-LINE DIAGRAM FOR CABLE SIZES.

(13) PROVIDE (1) 1 1/2"C PVC COATED RSC FOR HIGH AND LOW FLOAT CABLES.

(14) PROVIDE (1) 1 1/2"C PVC COATED RSC FOR LEVEL TRANSMITTER CABLE.

(15) LIGHTING FIXTURE MOUNTED ON POLE AT 10'-0" ABOVE TOP OF CONCRETE FOOTING.
LIGHTING FIXTURE: KIM LIGHTING ARCHETYPE,
CAT. # 1SA-SAR2-60L-4K-120-DB
POLE: CAT. #PRA10-4125-SA-DB.
SEE DWG. E36 FOR SITE LIGHT INSTALLATION DETAIL.

(16) PROVIDE 1" PVC CONDUIT WITH
2 #12 + 1 #12 (G), PNL "A", CKT. #11, VIA LIGHT SWITCH IN CONTROL PANEL FOR SITE LIGHTING.
SEE DWG. E5 FOR PANEL "A" SCHEDULE.

(17) PROVIDE 1"C WITH 2 #14 (GENERATOR COMMON ALARM)
2 #14 (LOW FUEL ALARM)
2 #14 (SPARES)
1 # 14 (G)

(18) PROVIDE CLASS I, DIV. 1 SEALING FITTING FOR ALL CONDUITS LEAVING THIS PULLBOX TOWARDS THE MOTOR CONTROL CENTER (MCC). SEE DWG. E36 FOR PULLBOX DETAILS.

NO	REVISIONS	DATE	APPR
1			
2			
3			
4			
5			
6			
7			

engineers, inc.
3350 scott blvd., bldg. 11
santa clara, ca. 95054
(408) 986-8558
FAX (408) 986-9627
PROJECT NO. 18697-06

CITY OF ALAMEDA
GROUP 4 - SEWERAGE PUMP STATION RENOVATIONS FOR RELIABILITY AND SAFETY IMPROVEMENTS
COLA BALLENA PUMP STATION
SITE PLAN - NEW WORK

DATE:	11/27/19
SCALE:	AS SHOWN
DESIGN:	JCH
DRAWN:	VDM
CHECKED:	JCH

DWG 9425 CASE 35

E4

11 OF 70

File: M:\18697-06 Alameda Pumps – Group 4\11_COB_E4.dwg, 11/27/2019 3:14 PM, Last saved: Vuong, PlotDate: 11/27/2019 3:41 PM By: Vuong Mai, Plot scale: 1:2.5849, Plot Size: ANSI A (8.50 x 11.00 Inches)
Xrefs: SHEET_S&W_Group-4 Cola Ballena and Marina Village_072319 Group4_Electrical_New-work C3D-TP-PS28

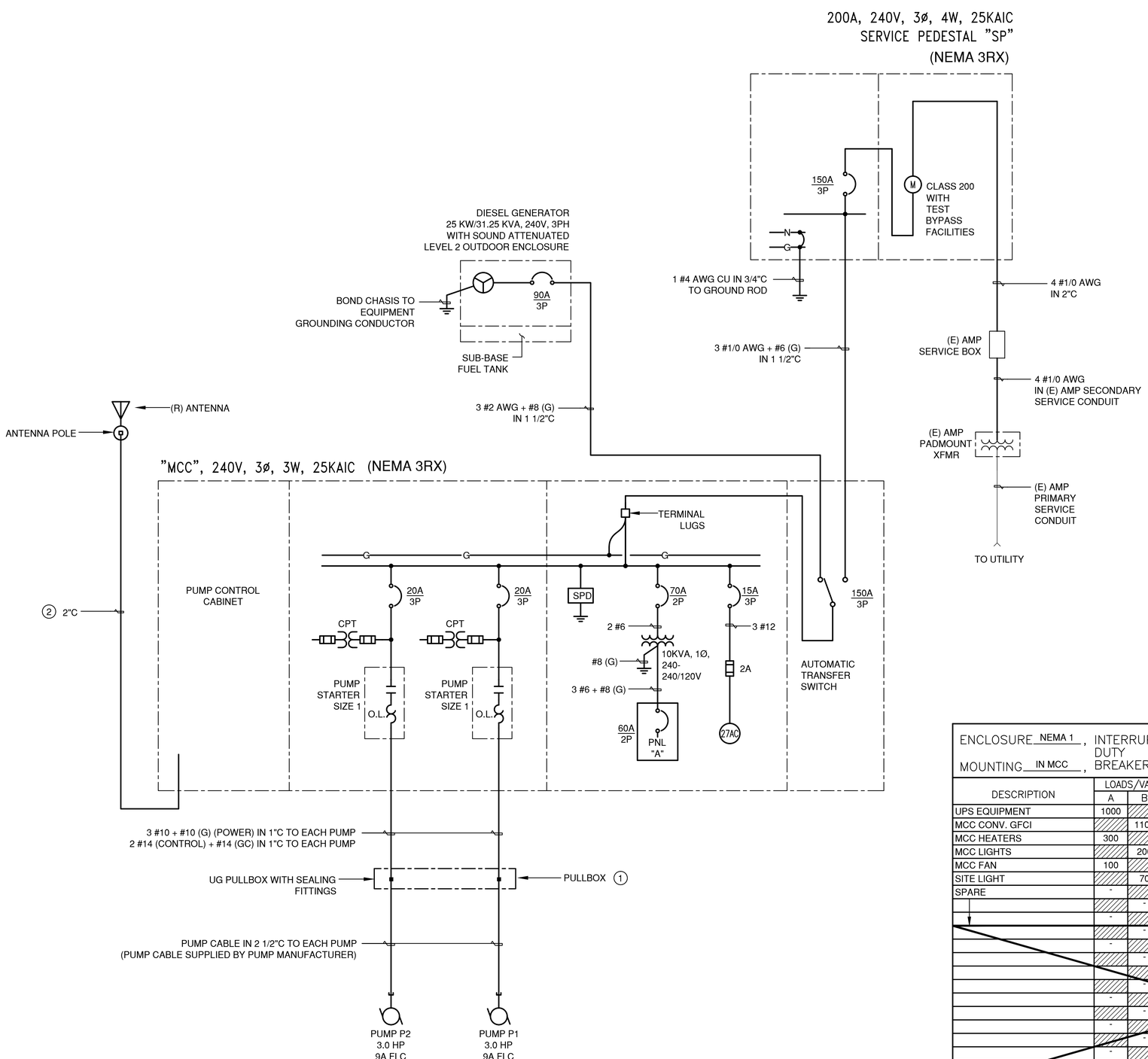

1 — COLA BALLENA ONE-LINE DIAGRAM
SCHEMATIC

GENERAL NOTES:

1. ALL WORK SHOWN ON THIS DRAWING IS NEW WORK TO BE PROVIDED UNLESS INDICATED (E) OR EXISTING OR (R) RELOCATED.

SHEET NOTES:

(1) PROVIDE IN GROUND PULL BOX FOR PUMP POWER AND MONITORING CONTROL CIRCUITS, SIZE 6T, CHRISTY B1730 WITH 12" EXTENSION (17" x 30") REINFORCED TRAFFIC RATED CONCRETE BOX WITH BOLT DOWN, STEEL CHECKER PLATED COVER.

(2) PROVIDE CONDUIT AND ANTENNA COAX CABLE "TIMES MICROWAVE SYSTEMS" LMR-200 WITH COAX CONNECTORS AND "POLYPHASER" LIGHTNING SURGE PROTECTOR INSTALLED INSIDE CONTROL PANEL.

ENCLOSURE NEMA 1, INTERRUPTING DUTY 240/120 VOLT, 3 PHASE, 3 WIRE
MOUNTING IN MCC, BREAKER 10KAIC, 60A A. MAIN BREAKER, 100 A. BUS

DESCRIPTION	LOADS/VA A	LOADS/VA B	BKR./POLE	CKT. NO.	PHASE A	PHASE B	CKT. NO.	BKR./POLE	LOADS/VA A	LOADS/VA B	DESCRIPTION
UPS EQUIPMENT	1000		20/1	1			2	20/1	1500		GENERATOR JACKET HEATER
MCC CONV. GFCI		1100	20/1	3			4			1100	BATTERY CHARGER
MCC HEATERS	300			5			6		-		SPARE
MCC LIGHTS		200		7			8			-	
MCC FAN	100		15/1	9			10		-		
SITE LIGHT		70	20/1	11			12			-	
SPARE	-			13			14		-		
		-		15			16			-	
	-			17			18		-		
		-		19			20			-	
	-			21			22		-		
		-		23			24			-	
				25			26		-		
		-		27			28			-	
	-			29			30		-		
		-		31			32			-	
	-			33			34		-		
		-		35			36			-	
	-			37			38		-		
		-		39			40			-	
	-			41			42		-		
	1400	1370							1500	1100	

TOTAL: 5.37 KVA PANEL # "A" FEEDER SIZE SEE ONE-LINE DIAGRAM

NO	REVISIONS	DATE	APPR
1			
2			
3			
4			
5			
6			
7			
8			

engineers, inc.
3350 scott blvd., bldg. 11
santa clara, ca. 95054
(408) 986-8558
FAX (408) 986-9627
PROJECT NO. 18697-06

CITY OF ALAMEDA
GROUP 4 - SEWERAGE PUMP STATION RENOVATIONS
FOR RELIABILITY AND SAFETY IMPROVEMENTS
COLA BALLENA PUMP STATION
ONE-LINE - NEW WORK

DATE: 11/27/19
SCALE: AS SHOWN
DESIGN: JCH
DRAWN: VDM
CHECKED: JCH

DWG 9425 CASE 35

E5

12 OF 70

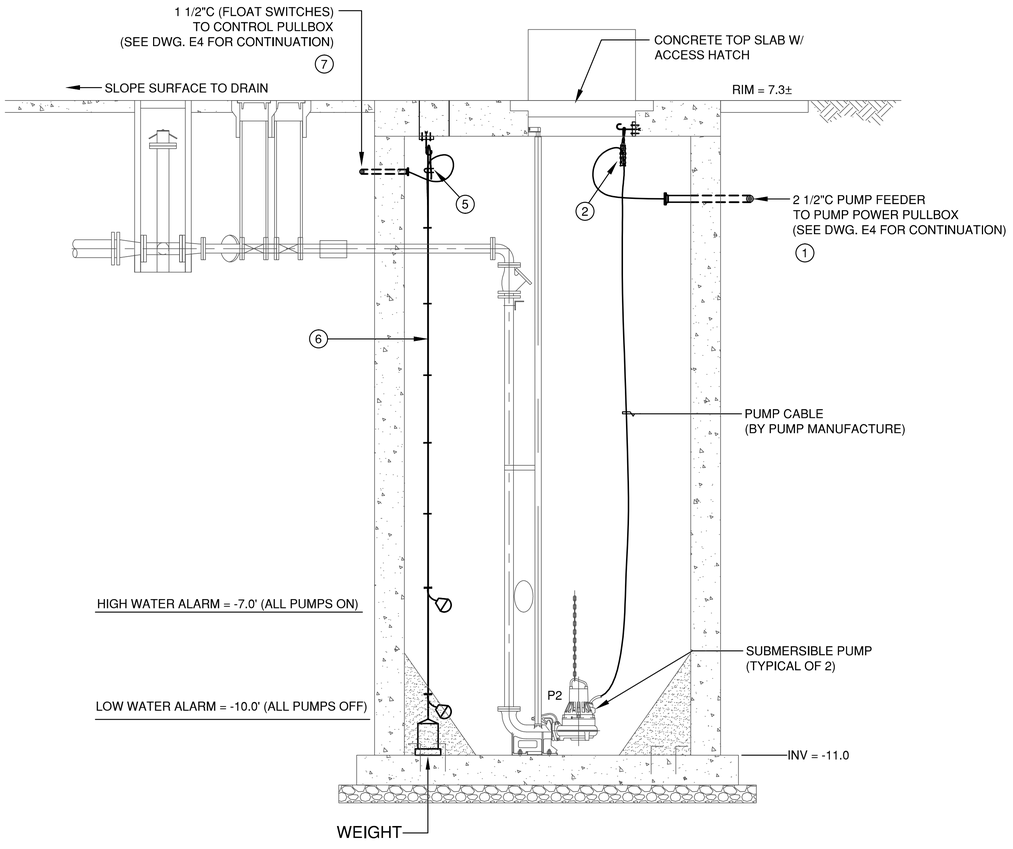

A — WET WELL ELEVATION

SCALE: 1/2" = 1'-0"

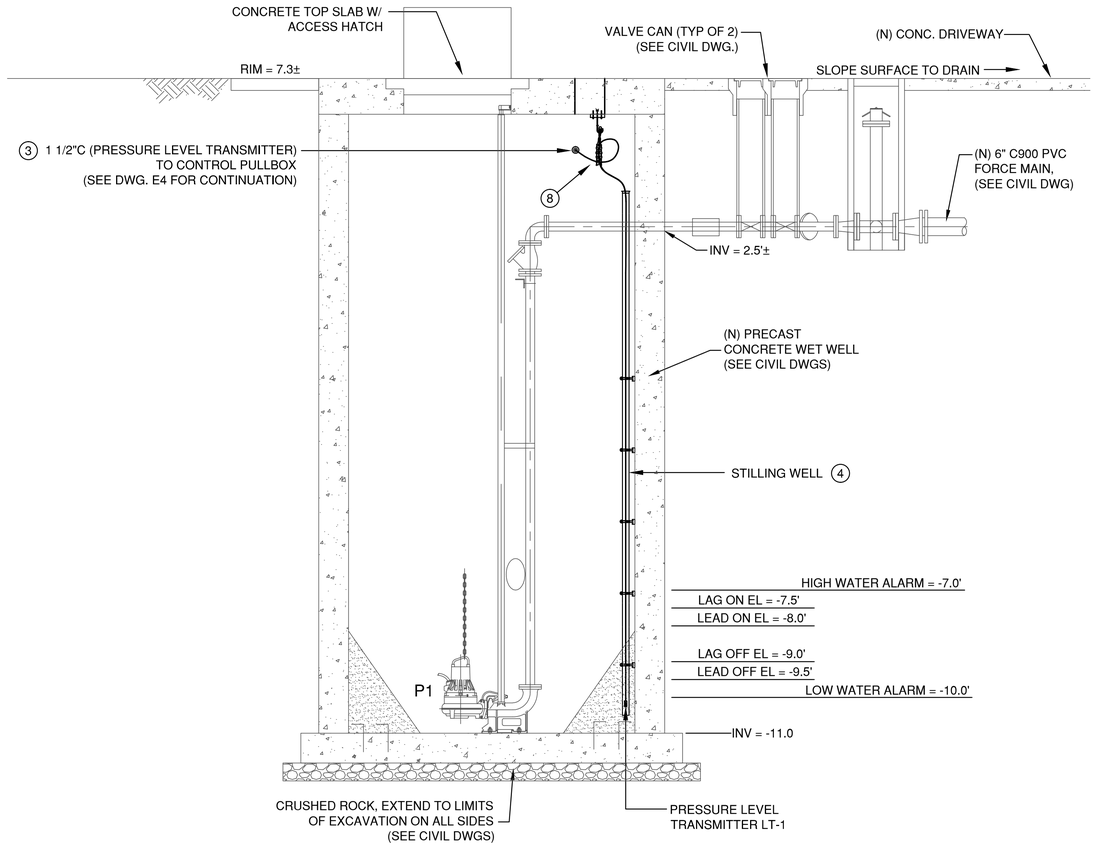

B — WET WELL ELEVATION

SCALE: 1/2" = 1'-0"

SHEET NOTES:

1. (1) 2 1/2"C (PUMP FEEDER CABLE).
   INSTALL INSULATED BUSHING AT WET WELL END AND INSULATED GROUNDING BUSHING AT THE POWER PULLBOX. DUCT SEAL BOTH ENDS AFTER CABLE INSTALLATION
2. STAINLESS STEEL HOOK, STAINLESS STEEL CHANNEL, STAINLESS STEEL ANCHOR BOLTS, AND STAINLESS STEEL CABLE GRIP.
3. (1) 1 1/2"C (PRESSURE LEVEL TRANSMITTER LT-1).
   INSTALL INSULATED BUSHING AT WET WELL END AND INSULATED GROUNDING BUSHING AT THE CONTROL PULLBOX. DUCT SEAL BOTH END AFTER CABLE INSTALLATION
4. PRESSURE LEVEL TRANSMITTER INSIDE STILLING WELL. SEE CIVIL DWG. D2, DETAIL 8. ADJUST CHAMFER PER CIVIL DRAWINGS.
5. STAINLESS STEEL HOOK, STAINLESS STEEL CHANNEL, STAINLESS STEEL ACHOR BOLT, STAINLESS STEEL THIMBLE, STAINLESS STEEL CABLE CLAMPS, AND PVC COATED 15-POUND WEIGHT.
6. 1/4" DIA. STAINLESS STEEL CABLE WITH FLOAT SWITCH CABLES. TIE WRAP WITH HEAVY PLASTIC TIE AT EVERY 2 FT.
7. (1) 1 1/2"C (FLOAT SWITCHES).
   INSTALL INSULATED BUSHING AT WET WELL END AND INSULATED GROUNDING BUSHING AT THE CONTROL PULLBOX. DUCT SEAL BOTH END AFTER CABLE INSTALLATION.
8. STAINLESS STEEL HOOK, STAINLESS STEEL CHANNEL, STAINLESS STEEL ANCHOR BOLTS, AND CABLE HANGER.

NO	REVISIONS	DATE	APPR
1			
2			
3			
4			
5			
6			
7			

engineers, inc.
3350 scott blvd., bldg. 11
santa clara, ca. 95054
(408) 986-8558
FAX (408) 986-9627
PROJECT NO. 18697-06

CITY OF ALAMEDA
GROUP 4 - SEWERAGE PUMP STATION RENOVATIONS
FOR RELIABILITY AND SAFETY IMPROVEMENTS
COLA BALLENA PUMP STATION
WET WELL ELEVATIONS

DATE:	11/27/19
SCALE:	AS SHOWN
DESIGN:	JCH
DRAWN:	VDM
CHECKED:	JCH

DWG 9425 CASE 35

E6

13 OF 70

File: M:\18697-06 Alameda Pumps - Group 4\13_COB_E6.dwg, 11/27/2019 3:13 PM, Last saved: Vuong, PlotDate: 11/27/2019 3:41 PM By: Vuong Mai, Plot scale: 1:2.5849, Plot Size: ANSI A (8.50 x 11.00 Inches)
Xrefs: SHEET_S&W_Group-4 Cola Ballena and Marina Village_072319

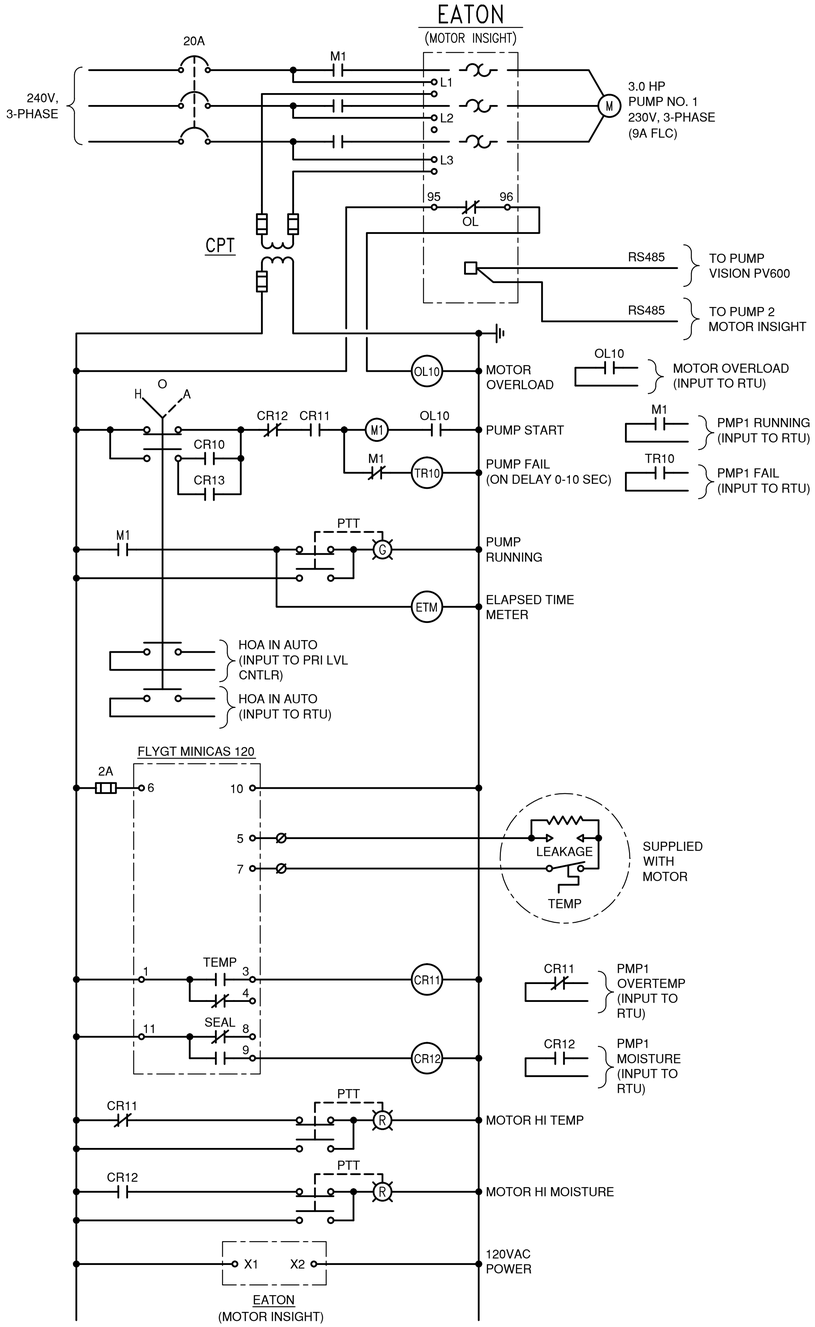

FVNR PUMP No. 1 CONTROL SCHEMATIC DIAGRAM
(SIMILAR FOR PUMP No. 2)

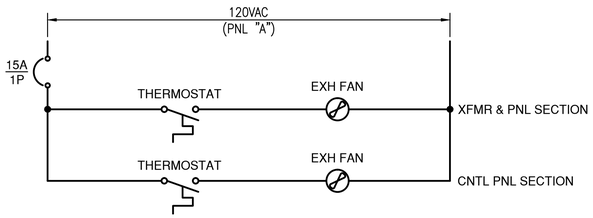

EXHAUST FAN CONTROL SCHEMATIC

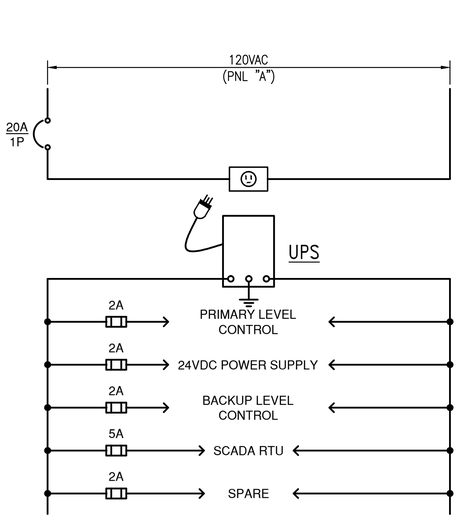

120V UPS SYSTEM SCHEMATIC

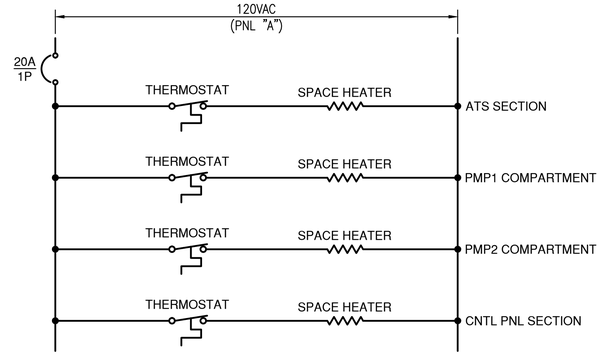

SPACE HEATER CONTROL SCHEMATIC

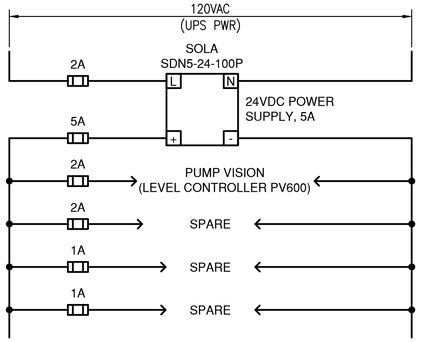

24VDC SYSTEM SCHEMATIC

NO	REVISIONS	DATE	APPR
1			
2			
3			
4			
5			
6			
7			

PROFESSIONAL ENGINEER
REGISTERED
JULIO C. HERDOCIA
No. 9580
9/30/20
ELECTRICAL
STATE OF CALIFORNIA

engineers, inc.
3350 scott blvd., bldg. 11
santa clara, ca. 95054
(408) 986-8558
FAX (408) 986-9627
PROJECT NO. 18697-06

CITY OF ALAMEDA
GROUP 4 - SEWERAGE PUMP STATION RENOVATIONS
FOR RELIABILITY AND SAFETY IMPROVEMENTS
COLA BALLENA PUMP STATION
CONTROL SCHEMATIC DIAGRAM

DATE:	11/27/19	DESIGN:	JCH
SCALE:	AS SHOWN	DRAWN:	VDM
		CHECKED:	JCH

DWG 9425 CASE 35

E7

14 OF 70

File: M:\18697-06 Alameda Pumps - Group 4\14_COB_E7.dwg, 11/7/2019 5:27 PM, Last saved: Vuong, PlotDate: 11/27/2019 3:41 PM By: Vuong Moi, Plot scale: 1:2.5849, Plot Size: ANSI A (8.50 x 11.00 Inches)
Xrefs: Group4_THREE PHASE-PUMPS - SCHEM SHEET_S&W_Group-4

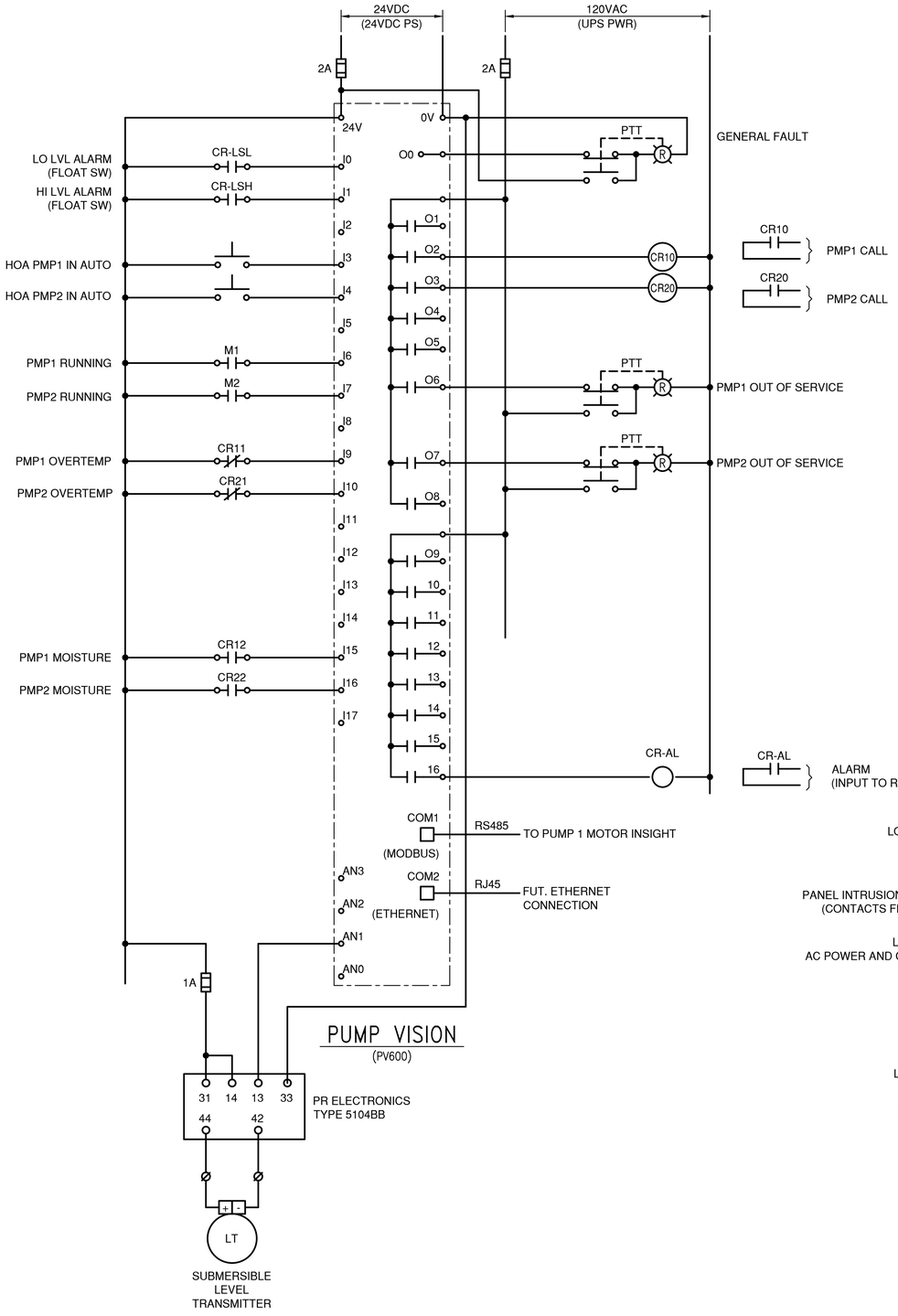

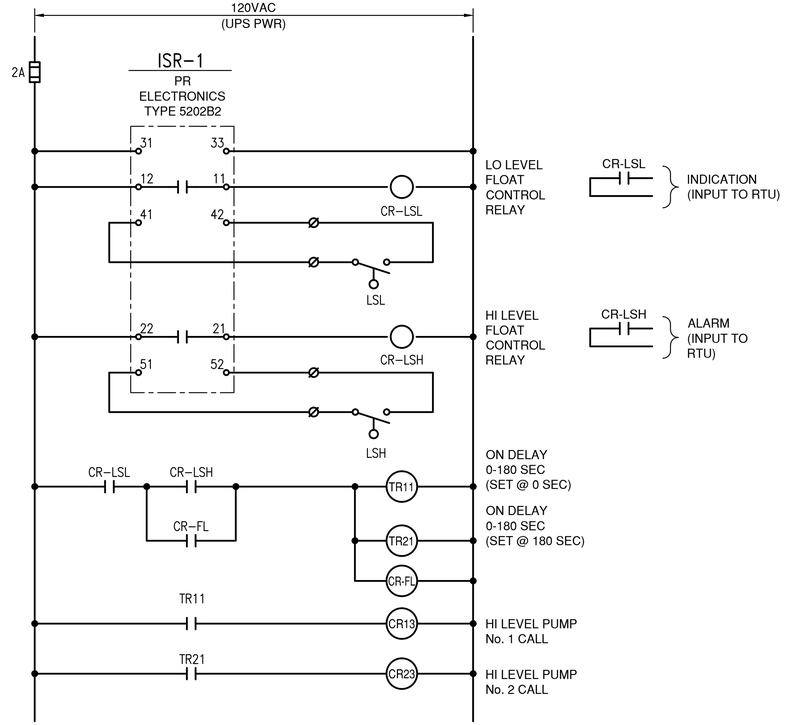

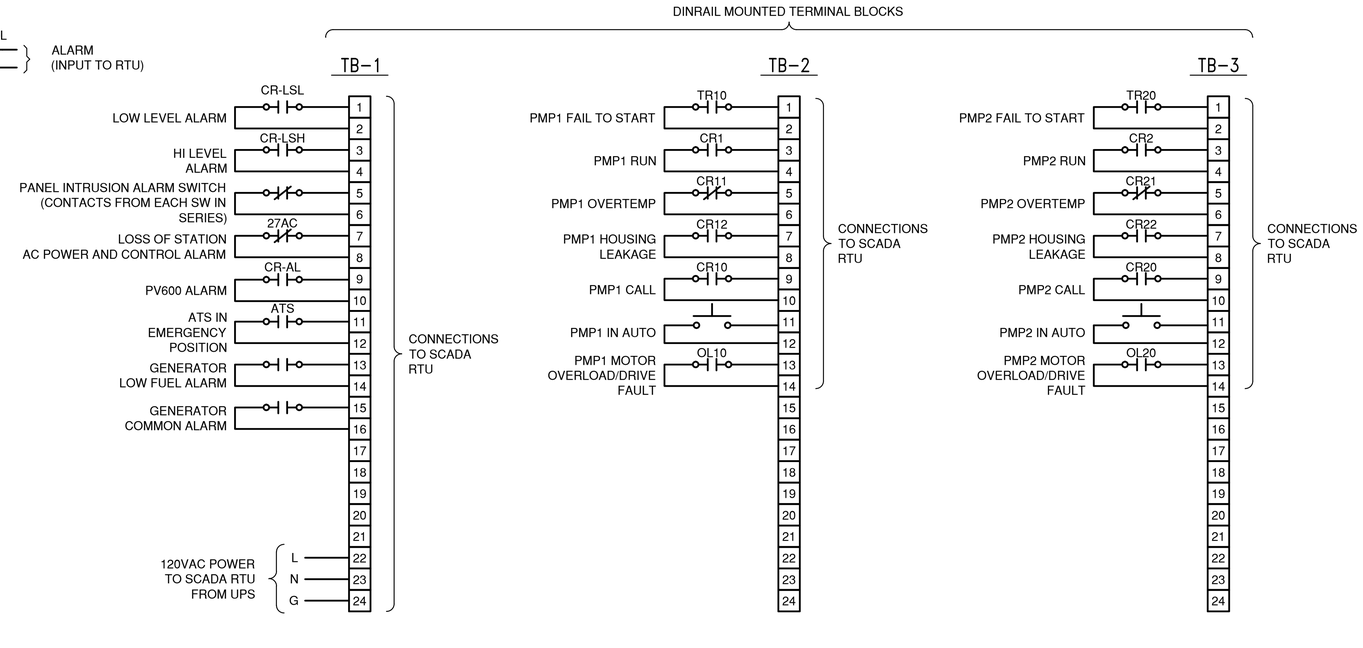

NO	REVISIONS	DATE	APPR
1			
2			
3			
4			
5			
6			
7			

PROFESSIONAL ENGINEER
REGISTERED
JULIO C. HERBOCIA
No. 9580
9/30/20
ELECTRICAL
STATE OF CALIFORNIA

mti engineers, inc.
3350 scott blvd., bldg. 11
santa clara, ca. 95054
(408) 986-8558
FAX (408) 986-9627
PROJECT NO. 18697-06

CITY OF ALAMEDA

GROUP 4 - SEWERAGE PUMP STATION RENOVATIONS FOR RELIABILITY AND SAFETY IMPROVEMENTS

COLA BALLENA PUMP STATION

SCHEMATIC DIAGRAM

DATE:	11/27/19
SCALE:	~~AS SHOWN~~
DESIGN:	JCH
DRAWN:	VDM
CHECKED:	JCH

DWG 9425 CASE 35

E8

15 OF 70

File: M:\18697-06 Alameda Pumps - Group 4\15_COB_E8.dwg, 11/7/2019 5:27 PM, Last saved: Vuong, PlotDate: 11/27/2019 3:41 PM By: Vuong Moi, Plot scale: 1:2.5849, Plot Size: ANSI A (8.50 x 11.00 Inches)
Xrefs: Group4_THREE PHASE-PUMPS - SCHEM SHEET_S&W_Group-4

#31 MARINA VILLAGE PUMP STATION

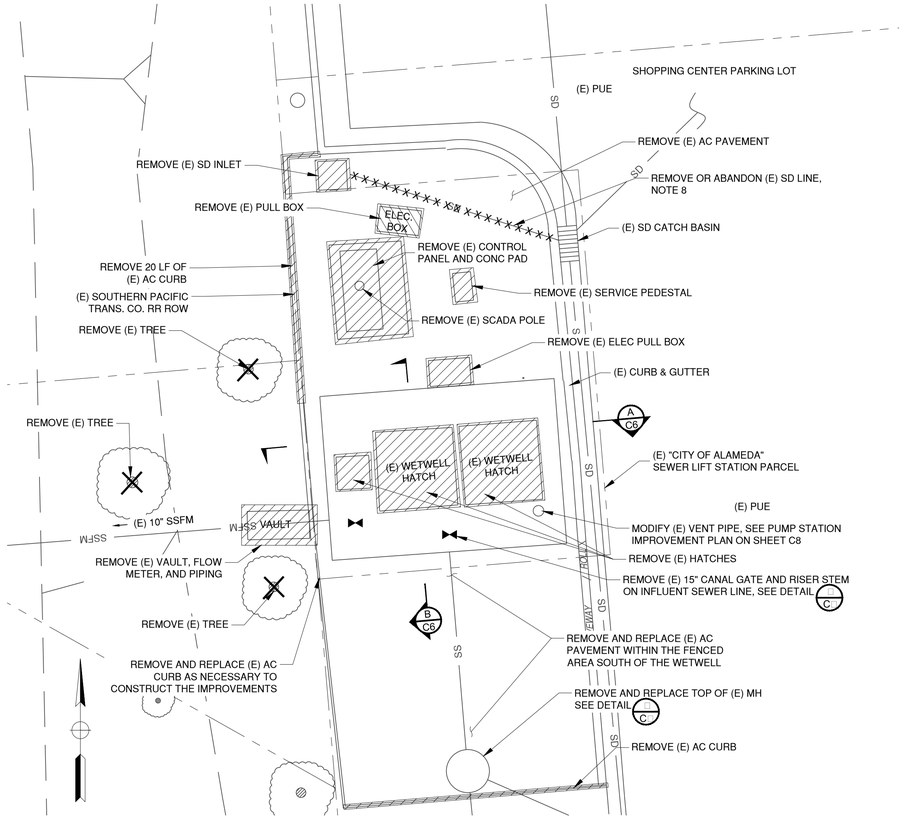

SCALE: 1 INCH = 5 FEET

DEMOLITION PLAN

SCALE: 1" = 5'

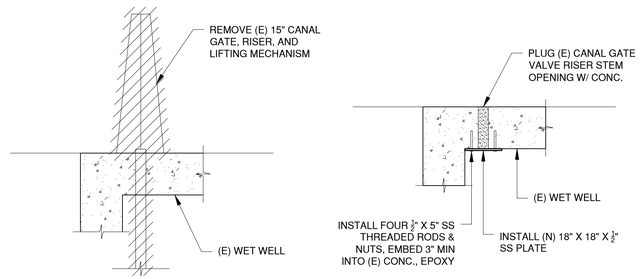

CANAL GATE & RISER STEM DEMOLITION DETAIL 1/C6

SCALE: NTS

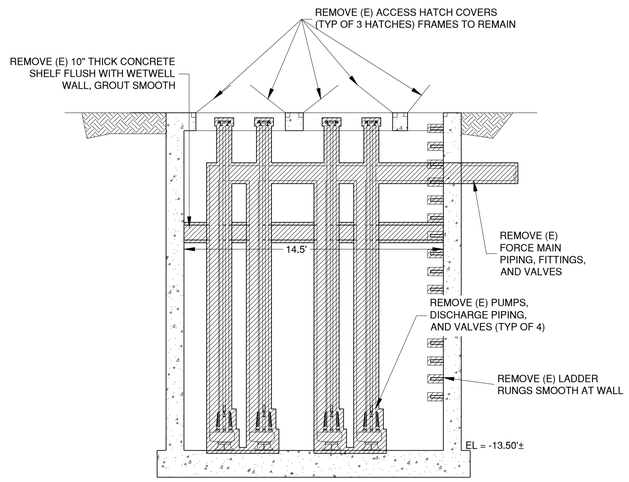

DEMOLITION SECTION A/C6

SCALE: 1/4" = 1'

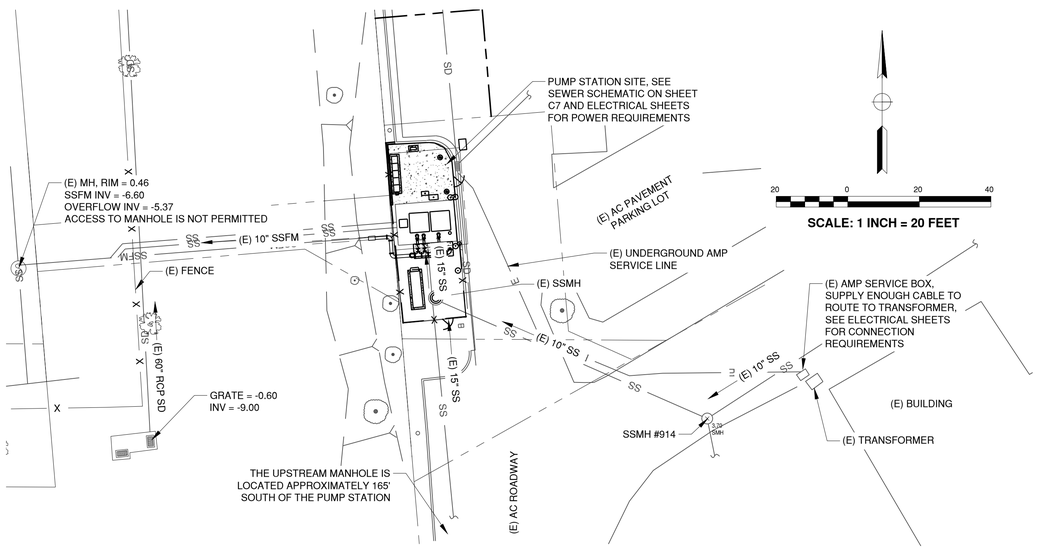

SCALE: 1 INCH = 20 FEET

POWER SERVICE LOCATION PLAN AND SEWER SYSTEM SCHEMATIC

SCALE: 1" = 20'

MARINA VILLAGE BASIS OF BEARING

MONUMENT LINE OF MARINA VILLAGE PARKWAY PER PARCEL MAP 4744, BOOK 161, PAGE 84.
MON #5001 TO #5002 S 88° 57' 16" E, 494.78' MONUMENT TO MONUMENT
ACTUAL N,E: #5002 = N471852.44 E1487512.94

MARINA VILLAGE BENCHMARK

HELD SSMH 914 RIM AS SHOWN ON CITY'S SYSTEM MAP ELEV. = 3.70'

PUMP STATION ADDRESS:
713 MARINA VILLAGE PARKWAY

NOTES:

1. CONTRACTOR SHALL CONTACT UNION PACIFIC RAILROAD, CALL BEFORE YOU DIG AT 1-800-336-9193 AND RENEW "TICKET #2013-0822022" AT THE ADDRESS OF 1111 MARINA VILLAGE PARKWAY TO PERFORM WORK ON RAILROAD PROPERTY. UNION PACIFIC PERMIT IS ONLY GOOD FOR 14 DAYS ONCE INITIATED.
2. ESTIMATED PEAK WET WEATHER FLOW RATE IS 375 GPM. SEE SPECIFICATIONS FOR BYPASS PUMPING REQUIREMENTS.
3. CONTRACTOR SHALL PROVIDE TRAFFIC CONTROL AT ALL TIMES WHEN WORK IS TAKING PLACE IN THE ROADWAY.
4. WHERE DEMOLITION OR REMOVAL OF EQUIPMENT LEAVES VOIDS IN THE CONCRETE STRUCTURE, FILL VOIDS WITH NON-SHRINK GROUT.
5. CONTRACTOR SHALL VERIFY LOCATION OF EXISTING IRRIGATION SYSTEMS PRIOR TO CONSTRUCTION AND NOTIFY THE CITY OF ANY POTENTIAL CONFLICTS.
6. CONTRACTOR SHALL PROVIDE A KEY LOCK BOX AT THE SITE, SEE GENERAL NOTE 20 ON SHEET 2.
7. SEE ELECTRICAL SHEETS FOR ADDITIONAL PUMP STATION IMPROVEMENTS.
8. ABANDON (E) GRAVITY STORM DRAIN PER TECHNICAL SPECIFICATIONS SECTION 02532.

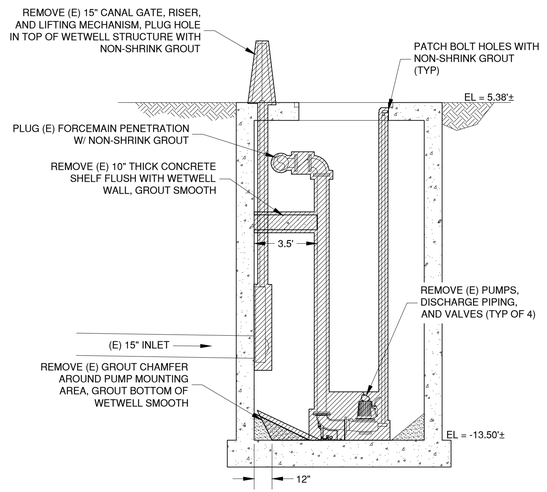

DEMOLITION SECTION B/C6

SCALE: 1/4" = 1'

NO	REVISIONS	DATE	APPR
1			
2			
3			
4			
5			
6			

PROFESSIONAL ENGINEER — CHRISTOPHER J. SCHICK — No. 71813 — CIVIL — STATE OF CALIFORNIA

Schaaf & Wheeler
CONSULTING CIVIL ENGINEERS
1171 HOMESTEAD RD, STE. 255
SANTA CLARA, CA 95050
(408) 246-4848

CITY OF ALAMEDA
GROUP 4 - SEWERAGE PUMP STATION RENOVATIONS FOR RELIABILITY AND SAFETY IMPROVEMENTS
MARINA VILLAGE DEMOLITION PLAN

DATE: 11/27/19
SCALE: AS SHOWN
DESIGN: CLP
DRAWN: CLP
CHECKED: BLS

DWG 9425 CASE 35

C6

16 OF 70

#31 MARINA VILLAGE PUMP STATION

MARINA VILLAGE PUMP STATION IMPROVEMENTS COORDINATES			
COORDINATE #	DESCRIPTION	NORTHING	EASTING
1	PULL BOX	□□□3□□□□	□□□□3□□□□
2	PULL BOX	□□□3□□□□	□□□□3□□□□
3	SITE LIGHT	□□□3□□□□	□□□□3□□□□
4	GENERATOR	□□□3□□□□	□□□□3□□□□
5	CONTROL PANEL	□□□3□□□□	□□□□33□□□
6	SERVICE PEDESTAL	□□□3□□□□	□□□□3□□□□
7	SCADA POLE	□□□3□□□□	□□□□3□□□□
8	FENCE CORNER	□□□3□□3□	□□□□33□□□
□	FENCE CORNER	□□□3□□□□	□□□□3□□□□
10	FENCE CORNER	□□□3□□□□	□□□□3□□□□

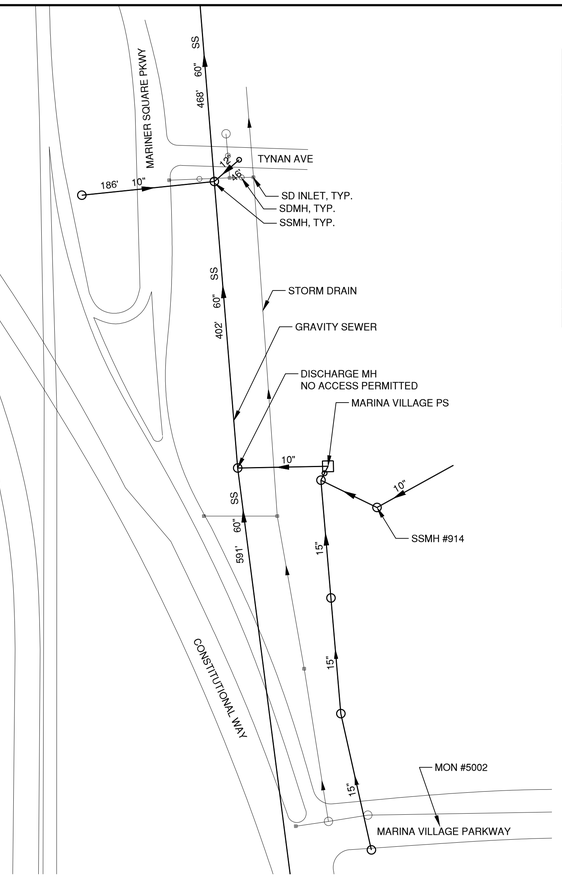

SEWER SYSTEM SCHEMATIC

SCALE: NTS

PUMP STATION ADDRESS:
713 MARINA VILLAGE PARKWAY

MARINA VILLAGE GENERATOR NOTES:
1. GENERATOR SIZE = 30 KW
2. GENERATOR ENCLOSURE = SOUND LEVEL II
3. GENERATOR NOISE REQUIREMENTS: 67.5 dBA AT 23'
4. APPROXIMATE OUTSIDE DIMENSIONS OF GENERATOR AND ENCLOSURE = 11.2' L X 2.9' W X 4.8' H
5. SEE ELECTRICAL PLANS AND SPECIFICATIONS FOR ADDITIONAL INFORMATION AND REQUIREMENTS

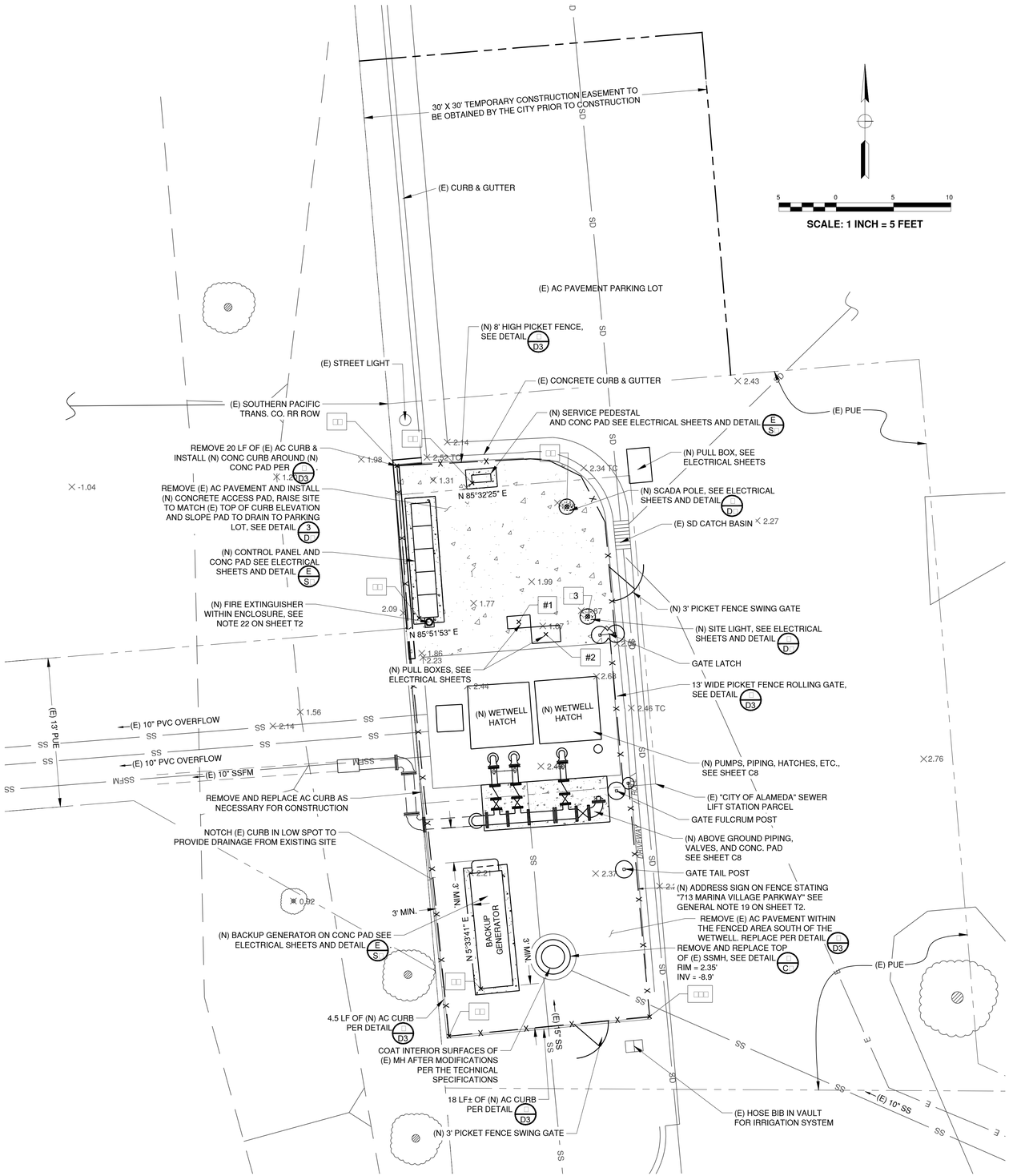

IMPROVEMENT PLAN

SCALE: 1" = 5'

NO	DATE	APPR	REVISIONS
1			
2			
3			
4			
5			
6			
7			

REGISTERED PROFESSIONAL ENGINEER — BRIAN L. SCHAAF — No. 33848 — CIVIL — STATE OF CALIFORNIA

Schaaf & Wheeler
CONSULTING CIVIL ENGINEERS
1171 HOMESTEAD RD, STE. 255
SANTA CLARA, CA 95050
(408) 246-4848

CITY OF ALAMEDA
GROUP 4 - SEWERAGE PUMP STATION RENOVATIONS FOR RELIABILITY AND SAFETY IMPROVEMENTS
MARINA VILLAGE IMPROVEMENT
SITE PLAN

DATE:	11/27/19
SCALE:	AS SHOWN
DESIGN:	CLP
DRAWN:	CLP
CHECKED:	BLS

DWG 9425 CASE 35

C7

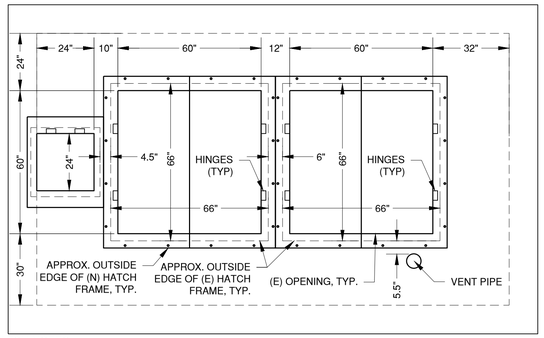

WET WELL HATCH NOTES:

1. NEW ACCESS HATCHES SHALL SPAN ACROSS THE ENTIRE EXISTING OPENING.
2. ACCESS HATCH SHALL BE EQUIPPED WITH INTEGRAL FALL PROTECTION. CONTRACTOR SHALL COORDINATE INSTALLATION WITH WET WELL COATING AND ENSURE PROPER INSTALLATION.
3. TOP OF HATCH SHALL BE 1/4" DIAMOND PLATE.
4. ACCESS HATCHES SHALL BE RATED FOR PEDESTRIAN LOADING.
5. HATCHES SHALL BE MANUFACTURED BY EJ, USF FABRICATION, OR APPROVED EQUAL CUSTOM MADE TO FIT THE DIMENSIONS SHOWN AND REQUIREMENTS LISTED.
6. ACCESS HATCH SHALL BE TOP MOUNTED AND BOLTED TO THE EXISTING CONCRETE STRUCTURE WITH 1-1/2" MIN. LONG 316 SS KWIK BOLT 3 OR APPROVED EQUAL. BOLT QUANTITIES AND SIZE SHALL BE BASED ON THE HATCH MANUFACTURER'S REQUIREMENTS.
7. HATCH SHALL BE EQUIPPED WITH HYDRAULIC LIFT SPRINGS TO ASSIST WITH OPENING.
8. HATCH SHALL HAVE A RECESSED PADLOCK CLIP FOR LOCKING.
9. ALL HARDWARE AND HINGES SHALL BE SS.
10. THE PUMP ACCESS HATCHES SHALL HAVE INTERIOR CLEAR DIMENSIONS SUFFICIENT TO ALLOW FOR THE INSTALLATION AND REMOVAL OF PUMPS. IN NO CASE SHALL THE CLEAR DIMENSIONS BE REDUCED TO LESS 48 INCHES.
11. CONTRACTOR SHALL NOTE THAT DUE TO THE TIGHT TOLERANCES BETWEEN THE EXISTING ACCESS HATCHES, SPECIAL CONSIDERATION SHALL BE GIVEN TO HATCH FRAME DIMENSIONS IN THE AREA BETWEEN THE HATCHES. THIS MAY REQUIRE CUSTOM DESIGNED AND BUILT HATCH FRAMES.
12. CONTRACTOR SHALL ENSURE ALL HATCHES CAN BE FULLY OPENED AT THE SAME TIME WITHOUT INTERFERENCE.
13. CONTRACTOR SHALL CONFIRM EXISTING DIMENSIONS PRIOR TO ORDERING HATCHES.

WET WELL ACCESS HATCH DETAIL

SCALE: NTS

NOTES:

1. POSITION PUMPS TO SUFFICIENTLY CLEAR HATCH FALL PROTECTION. PROVIDE GUIDE RAIL TOP BRACKET EXTENSION AS NECESSARY TO CLEAR THE FALL PROTECTION.

PUMP MOUNTING PLAN

SCALE: 1/4" = 1'

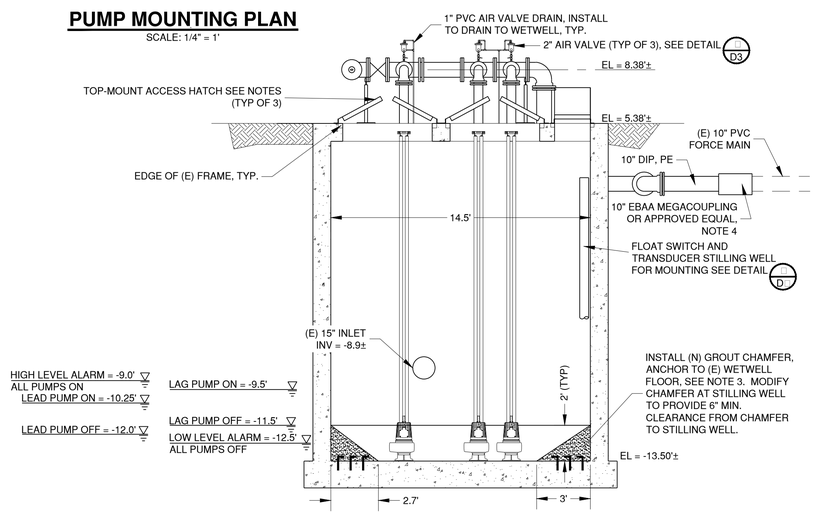

IMPROVEMENT SECTION A / C8

SCALE: 1/4" = 1'

#31 MARINA VILLAGE PUMP STATION

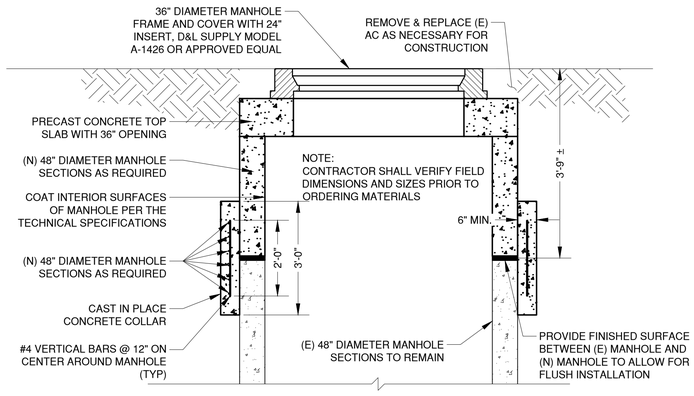

NOTES:
CONTRACTOR SHALL EXCAVATE A 4-FOOT DEEP TRENCH THAT MEASURES THE OD OF THE MANHOLE PLUS 3-FEET, REMOVE (E) SSMH FRAME, LID, AND CONE. BACKFILL AROUND MANHOLE PER TRENCH DETAIL D. REPLACE (E) AV PAVEMENT AND CONCRETE CURB AS NECESSARY TO REPLACE (E) FRAME, LID, AND CONE.

MANHOLE MODIFICATION DETAIL 1 / C8

SCALE: NOT TO SCALE

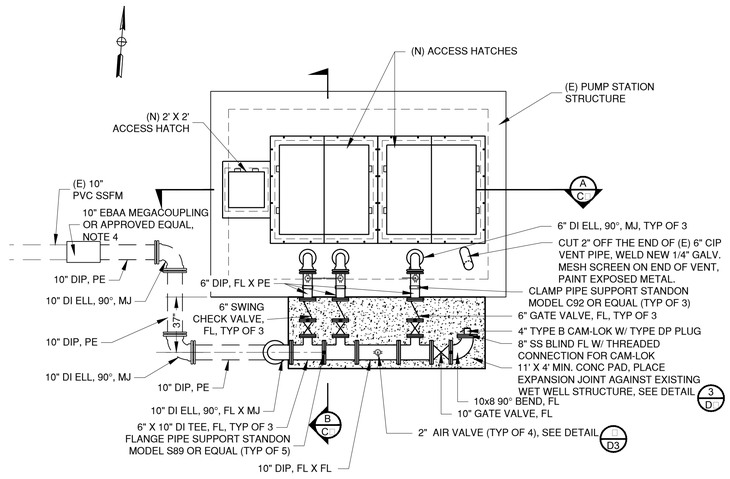

PUMP STATION IMPROVEMENT PLAN

SCALE: 1/4" = 1'

MARINA VILLAGE PUMP NOTES:
PUMP SHALL BE AN INDUSTRIAL SEWAGE PUMP, RATED FOR USE IN CLASS 1, DIVISION 1, GROUP D LOCATIONS. PUMP SHALL BE SUPPLIED WITH INTEGRAL MOISTURE AND TEMPERATURE SENSORS. PUMP SHALL BE FLYGT MODEL NP 3127 LT WITH THE FOLLOWING CHARACTERISTICS (SEE THE TECHNICAL SPECIFICATIONS FOR ADDITIONAL REQUIREMENTS):

VOLTAGE: 460V, AC, 60 HZ
PHASES: THREE (3)
HORSEPOWER: 7.5
IMPELLER DIAMETER: 6.85 INCHES (174 MM)
IMPELLER TYPE: HARD IRON™
RATING POINT: 963 GPM AT 18.1 FEET OF HEAD
DISCHARGE SIZE: 5 7/8 INCHES

THE CITY HAS STANDARDIZED THE PUMP MANUFACTURER, NO SUBSTITUTIONS WILL BE ACCEPTED.

WETWELL AND MANHOLE COATING:

1. THE INTERIOR SURFACES OF THE EXISTING WETWELL AND MANHOLE SHALL BE COATED PER THE TECHNICAL SPECIFICATIONS.
2. THE WETWELL IS 9.5 FEET WIDE, 14.5 FEET LONG, AND 17.5 FEET DEEP AND WAS CONSTRUCTED IN APPROXIMATELY 1986.

SHEET NOTES:

1. ALL PIPING CONNECTIONS SHALL BE MECHANICALLY RESTRAINED. MJ CONNECTIONS SHALL BE RESTRAINED USING EBAA MEGALUGS OR APPROVED EQUAL.
2. SEE ELECTRICAL SHEETS FOR ADDITIONAL PUMP STATION IMPROVEMENTS.
3. INSTALL REBAR ANCHORS FOR ALL GROUT CHAMFERS. REBAR ANCHORS SHALL BE #5 BARS 12" IN TOTAL LENGTH, DRILLED AND EPOXIED 3" INTO CONCRETE INVERT. SPACE ANCHORS AT 9" ON CENTER IN EACH DIRECTION AND PROVIDE 2" MINIMUM CLEARANCE TO LIMIT OF GROUT.
4. CONTRACTOR SHALL EXCAVATE AND CONFIRM (E) FORCE MAIN MATERIAL PRIOR TO ORDERING COUPLING.

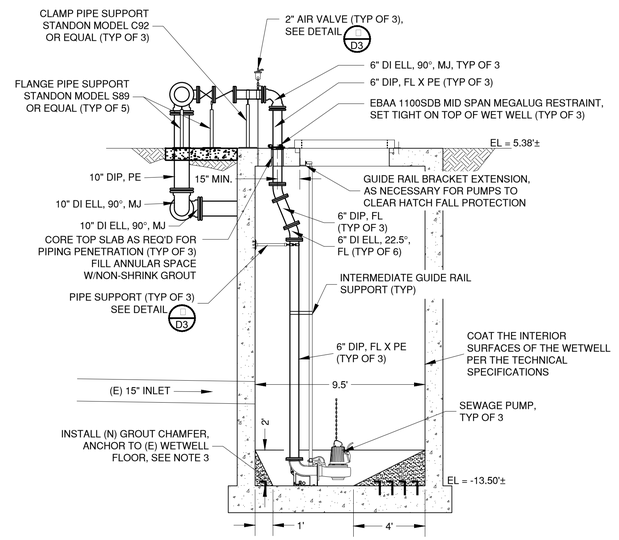

IMPROVEMENT SECTION B / C8

SCALE: 1/4" = 1'

NO	DATE	APPR	REVISIONS
1			
2			
3			
4			
5			
6			
7			

Schaaf & Wheeler
CONSULTING CIVIL ENGINEERS
1171 HOMESTEAD RD, STE. 255
SANTA CLARA, CA 95050
(408) 246-4848

CITY OF ALAMEDA
GROUP 4 - SEWERAGE PUMP STATION RENOVATIONS FOR RELIABILITY AND SAFETY IMPROVEMENTS
MARINA VILLAGE
SECTION AND DETAILS

DATE:	11/27/19
SCALE:	AS SHOWN
DESIGN:	CLP
DRAWN:	CLP
CHECKED:	BLS

DWG 9425 CASE 35

C8

18 OF 70

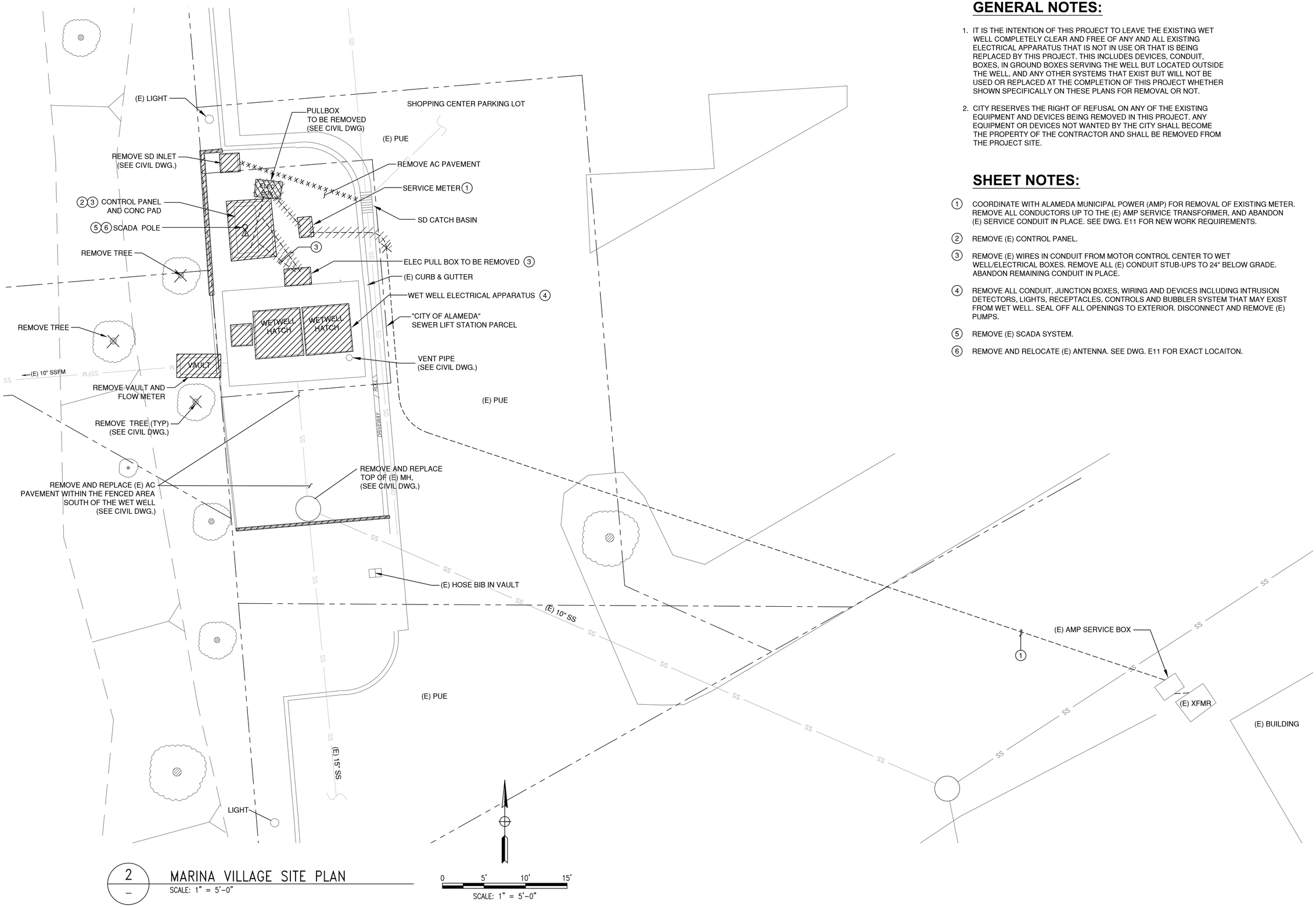

2 — MARINA VILLAGE SITE PLAN
SCALE: 1" = 5'-0"

0 5' 10' 15'
SCALE: 1" = 5'-0"

GENERAL NOTES:

1. IT IS THE INTENTION OF THIS PROJECT TO LEAVE THE EXISTING WET WELL COMPLETELY CLEAR AND FREE OF ANY AND ALL EXISTING ELECTRICAL APPARATUS THAT IS NOT IN USE OR THAT IS BEING REPLACED BY THIS PROJECT. THIS INCLUDES DEVICES, CONDUIT, BOXES, IN GROUND BOXES SERVING THE WELL BUT LOCATED OUTSIDE THE WELL, AND ANY OTHER SYSTEMS THAT EXIST BUT WILL NOT BE USED OR REPLACED AT THE COMPLETION OF THIS PROJECT WHETHER SHOWN SPECIFICALLY ON THESE PLANS FOR REMOVAL OR NOT.
2. CITY RESERVES THE RIGHT OF REFUSAL ON ANY OF THE EXISTING EQUIPMENT AND DEVICES BEING REMOVED IN THIS PROJECT. ANY EQUIPMENT OR DEVICES NOT WANTED BY THE CITY SHALL BECOME THE PROPERTY OF THE CONTRACTOR AND SHALL BE REMOVED FROM THE PROJECT SITE.

SHEET NOTES:

1. COORDINATE WITH ALAMEDA MUNICIPAL POWER (AMP) FOR REMOVAL OF EXISTING METER. REMOVE ALL CONDUCTORS UP TO THE (E) AMP SERVICE TRANSFORMER, AND ABANDON (E) SERVICE CONDUIT IN PLACE. SEE DWG. E11 FOR NEW WORK REQUIREMENTS.
2. REMOVE (E) CONTROL PANEL.
3. REMOVE (E) WIRES IN CONDUIT FROM MOTOR CONTROL CENTER TO WET WELL/ELECTRICAL BOXES. REMOVE ALL (E) CONDUIT STUB-UPS TO 24" BELOW GRADE. ABANDON REMAINING CONDUIT IN PLACE.
4. REMOVE ALL CONDUIT, JUNCTION BOXES, WIRING AND DEVICES INCLUDING INTRUSION DETECTORS, LIGHTS, RECEPTACLES, CONTROLS AND BUBBLER SYSTEM THAT MAY EXIST FROM WET WELL. SEAL OFF ALL OPENINGS TO EXTERIOR. DISCONNECT AND REMOVE (E) PUMPS.
5. REMOVE (E) SCADA SYSTEM.
6. REMOVE AND RELOCATE (E) ANTENNA. SEE DWG. E11 FOR EXACT LOCAITON.

NO	REVISIONS	DATE	APPR
1			
2			
3			
4			
5			
6			
7			

PROFESSIONAL ENGINEER — REGISTERED — JULIO C. HERDOCIA — No. 9580 — Exp. 9/30/20 — ELECTRICAL — STATE OF CALIFORNIA

engineers, inc.
3350 scott blvd, bldg. 11
santa clara, ca. 95054
(408) 986-8556
FAX (408) 986-9627
PROJECT NO. 11697-06

CITY OF ALAMEDA
GROUP 4 - SEWERAGE PUMP STATION RENOVATIONS
FOR RELIABILITY AND SAFETY IMPROVEMENTS
MARINA VILLAGE PUMP STATION
SITE PLAN - REMOVAL WORK

DATE: 11/27/19
SCALE: AS SHOWN
DESIGN: JCH
DRAWN: VDM
CHECKED: JCH

DWG 9425 CASE 35

E9

19 OF 70

FILE: M:\11697-01 Alameda Pumps \$_Alameda_Phase-1_Group-2\41_MVL-E11R.dwg 10/13/14 12:46 by vuongSCALE = 11697-01 \$_Alameda_Phase-1_Group-2\Group2_APS-BDR.dwg 11697-01 \Group2_Electricol_Removal-work.dwg BORDER = 11697-01\Alameda Group_2 Layouts_100114.dwg

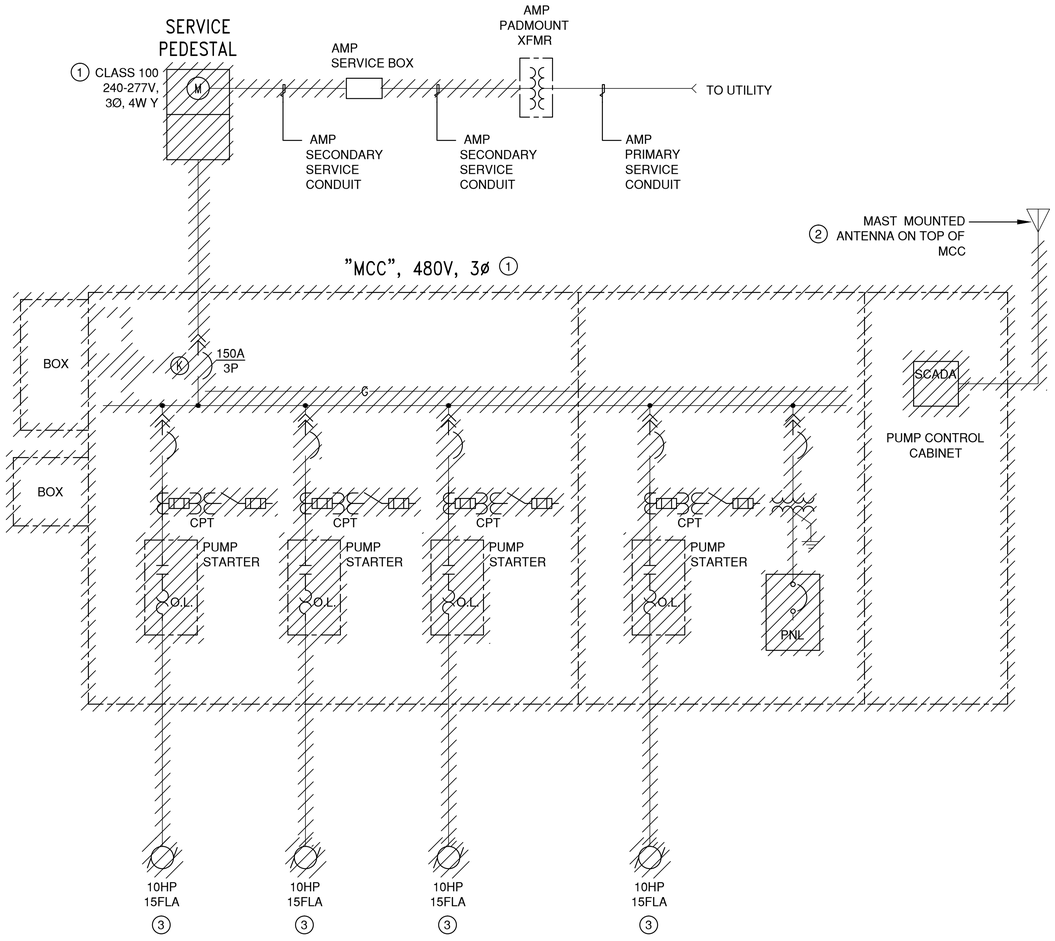

DETAIL 1 NOTES:

1. REMOVE SERVICE PEDESTAL AND MOTOR CONTROL CENTER INCLUDING ALL ENCLOSED EQUIPMENT AND DEVICES. VERIFY CONNECTIONS AND EXISTING CONDITIONS TO THE EXTENT REQUIRED TO SAFELY REMOVE EQUIPMENT.
2. DISCONNECT AND RETAIN SCADA ANTENNA FOR RE-USE.
3. DISCONNECT AND REMOVE PUMPS. SEE ALSO CIVIL DRAWINGS FOR ADDITIONAL INFORMATION.

1 MARINA VILLAGE ONE-LINE DIAGRAM
SCHEMATIC

NO	REVISIONS	DATE	APPR
1			
2			
3			
4			
5			
6			
7			

REGISTERED PROFESSIONAL ENGINEER JULIO C. HERDOCIA No. 9580 9/30/20 ELECTRICAL STATE OF CALIFORNIA

engineers, inc.
3350 scott blvd., bldg. 11
santa clara, ca. 95054
(408) 986-8558
FAX (408) 986-9627

PROJECT NO. 18697-06

CITY OF ALAMEDA
GROUP 4 - SEWERAGE PUMP STATION RENOVATIONS FOR RELIABILITY AND SAFETY IMPROVEMENTS
MARINA VILLAGE PUMP STATION
ONE LINE - REMOVAL WORK

DATE: 11/27/19
SCALE: AS SHOWN
DESIGN: JCH
DRAWN: VDM
CHECKED: JCH

DWG 9425 CASE 35

E10

20 OF **70**

FILE: M:\11697-01 Alemda Pumps \MVL-E11R.dwg 06/01/11 14:25 by vuong SCALE =
XREF: M:\11697-01 Alemda Pumps \APS-BDR.dwg XREF: M:\11697-01 Alemda Pumps \X-BASE-APS.dwg
BORDER =

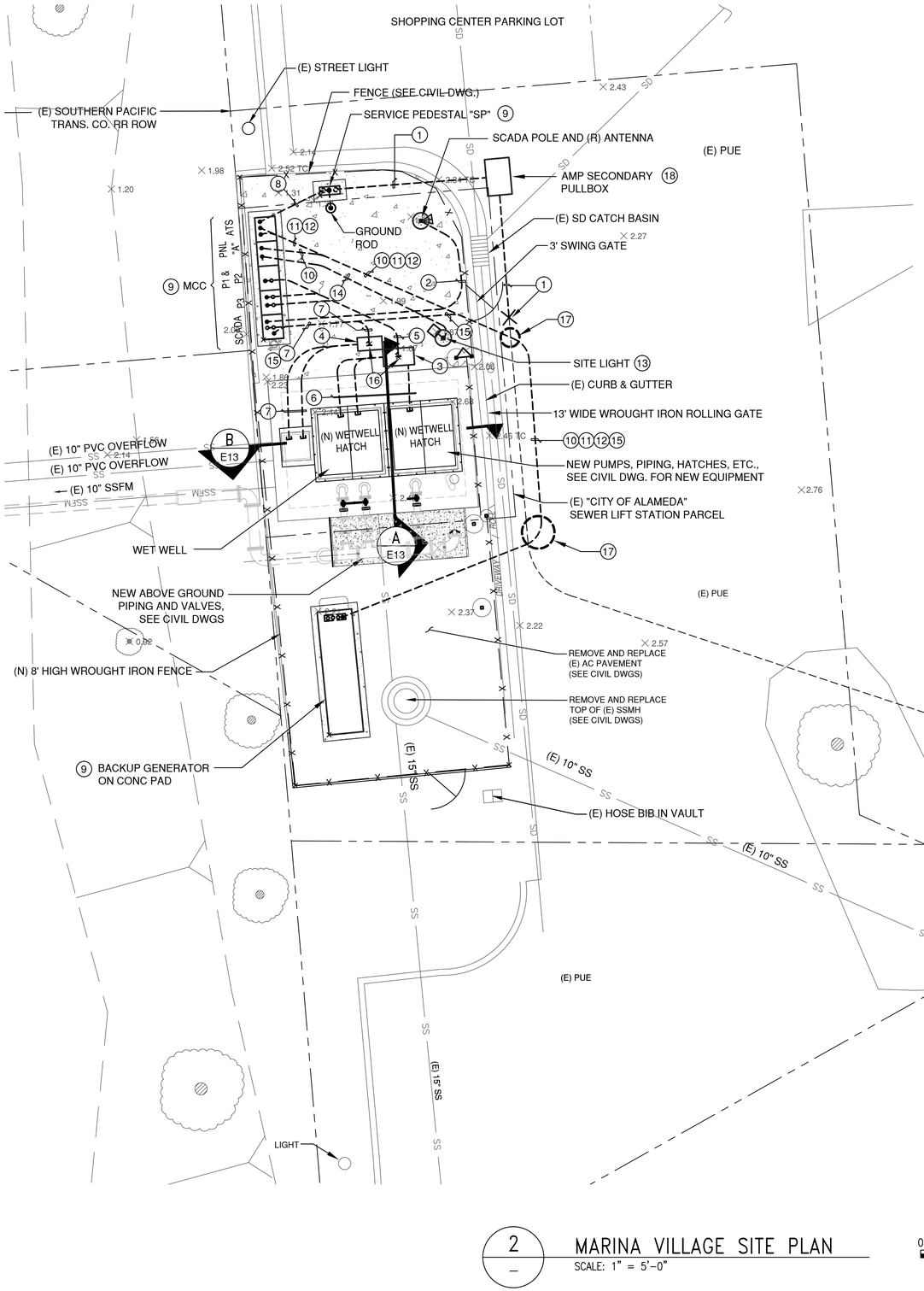

2 — MARINA VILLAGE SITE PLAN
SCALE: 1" = 5'-0"

0 5' 10' 15'
SCALE: 1" = 5'-0"

GENERAL NOTES:

1. ALL WORK SHOWN ON THIS DRAWING IS NEW WORK TO BE PROVIDED UNLESS INDICATED (E) OR EXISTING OR (R) RELOCATED.

SHEET NOTES:

1. COORDINATE WITH ALAMEDA MUNICIPAL POWER FOR EXTENDING THE (E) CONDUIT TO (N) AMP SECONDARY PULLBOX AND SERVICE PEDESTAL "SP". PROVIDE (N) 2" PVC CONDUIT. INSTALL IN ACCORDANCE WITH ALAMEDA MUNICIPAL POWER (AMP) STANDARD DETAIL 1-L-412. INSTALL (N) CONDUCTORS FROM (E) AMP SERVICE TRANSFORMER TO (N) SERVICE PEDESTAL "SP". SEE ONE-LINE DIAGRAM FOR CABLE SIZE.
2. PROVIDE 2"C FOR COAX CABLE CONNECTION FROM (R) ANTENNA MOUNTED ON (N) SCADA POLE TO SCADA SYSTEM. SEE CIVIL PLANS FOR POLE DETAILS.
3. PROVIDE IN GROUND PULL BOX FOR PUMP POWER AND MONITORING CONTROL CIRCUITS, SIZE 6T, CHRISTY B1730 WITH 12" EXTENSION (17" x 30") REINFORCED TRAFFIC RATED CONCRETE BOX WITH BOLT DOWN, STEEL CHECKER PLATED COVER.
4. PROVIDE IN GROUND PULL BOX FOR CONTROLS, SIZE 5T, CHRISTY B1324 WITH 12" EXTENSION (13" x 24") REINFORCED TRAFFIC RATED CONCRETE BOX WITH BOLT DOWN, STEEL CHECKER PLATED COVER.
5. PROVIDE (3) 1" PVC COATED RSC CONDUIT FOR PUMP POWER, (3) 1" PVC COATED RSC FOR MOISTURE AND TEMPERATURE MONITORING CONTROL CIRCUITS FOR WET WELL PUMPS. SEE ONE-LINE DIAGRAM FOR CABLE SIZES.
6. PROVIDE (3) 2 1/2" PVC COATED RSC CONDUIT FOR PUMP CABLING.
7. PROVIDE (2) 1 1/2" PVC COATED RSC FOR PRESSURE LEVEL TRANSMITTER AND HIGH AND LOW FLOAT CABLES.
8. PROVIDE 1 1/2"C FOR FEEDER TO MCC / ATS. SEE ONE-LINE DIAGRAM FOR CABLE SIZE.
9. COORDINATE EXACT CONDUIT STUB-UP LOCATIONS WITH EQUIPMENT MANUFACTURER SHOP DRAWINGS.
10. PROVIDE 1"C WITH
    2 #10, PNL "A", CKT. #2 FOR JACKET WATER HEATER.
    2 #10, PNL "A", CKT. #4 FOR BATTERY CHARGER.
    1 #10 (G)
    SEE DWG. E12 FOR PANEL "A" SCHEDULE.
11. PROVIDE 2 #12 IN 1"C FOR GENERATOR START SIGNAL WIRES.
12. PROVIDE 1 1/2"C FOR FEEDER FROM GENERATOR TO ATS. SEE ONE-LINE DIAGRAM FOR CABLE SIZE.
13. LIGHTING FIXTURE MOUNTED ON POLE AT 10'-0"
    LIGHTING FIXTURE: KIM LIGHTING ARCHETYPE
    CAT. # ISA-SAR2-60L-4K-120-DB
    POLE: CAT. #PRA10-4125-SA-DB
    SEE DWG. E37 FOR SITE LIGHT INSTALLATION DETAILS.
14. PROVIDE 1"C CONDUIT WITH 2 #12 + 1 #12 (G), PNL "A", CKT. #11, VIA LIGHT SWITCH
    IN CONTROL PANEL FOR (N) SITE LIGHTING.
    SEE DWG. E12 FOR PANEL "A" SCHEDULE.
15. PROVIDE 1"C WITH 2 #14 (GENERATOR COMMON ALARM)
    2 #14 (LOW FUEL ALARM)
    2 #14 (SPARES)
    1 #14 (G)
16. PROVIDE CLASS I, DIV. 1 SEALING FITTING FOR ALL CONDUITS LEAVING THIS PULLBOX TOWARDS THE MOTOR CONTROL CENTER (MCC).
17. HAND EXCAVATE AT CONDUIT CROSSING TO AVOID DAMAGE TO EXISTING CONDUIT.
18. PROVIDE ALAMEDA MUNICIPAL POWER (AMP), 24" W x 36" L x 36" D, TRAFFIC RATED PULLBOX. INSTALL IN ACCORDANCE WITH ALAMEDA MUNICIPAL POWER STANDARD DETAIL 1-L-513. PULLBOX SHALL BE MARKED "ALAMEDA MUNICIPAL POWER ELECTRICAL".

NO	REVISIONS	DATE	APPR
1			
2			
3			
4			
5			
6			
7			

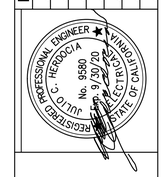

engineers, inc.
3350 scott blvd., bldg. 11
santa clara, ca. 95054
(408) 986-8558
FAX (408) 986-9627
PROJECT NO. 18697-06

CITY OF ALAMEDA
GROUP 4 - SEWERAGE PUMP STATION RENOVATIONS FOR RELIABILITY AND SAFETY IMPROVEMENTS
MARINA VILLAGE PUMP STATION
SITE PLAN - NEW WORK

DATE:	11/27/19	DESIGN:	JCM
SCALE:	AS SHOWN	DRAWN:	VDM
		CHECKED:	JOH

DWG 9425 CASE 35

E11
21 OF 70

FILE: M:\11697-01 Alemda Pumps \MVL-E11.dwg 06/01/11 15:24 by vuong BORDER =
XREF: M:\11697-01 Alemda Pumps \APS-BDR.dwg XREF: M:\11697-01 Alemda Pumps \X-BASE-APS.dwg SCALE =

ENCLOSURE NEMA 1, INTERRUPTING DUTY 240/120 VOLT, 3 PHASE, 3 WIRE

MOUNTING IN MCC, BREAKER 10KAIC, 60A A. MAIN BREAKER, 100 A. BUS

DESCRIPTION	LOADS/VA A	LOADS/VA B	BKR./POLE	CKT. NO.	PHASE A B	CKT. NO.	BKR./POLE	LOADS/VA A	LOADS/VA B	DESCRIPTION
UPS EQUIPMENT	1000		20/1	1		2	20/1	1500		GENERATOR JACKET HEATER
MCC CONV. GFCI		1100	20/1	3		4			1100	BATTERY CHARGER
MCC HEATERS	300			5		6		-		SPARE
MCC LIGHTS		200		7		8			-	
MCC FAN	100		15/1	9		10		-		
SITE LIGHT		70	20/1	11		12			-	
SPARE	-			13		14		-		
		-		15		16			-	
	-			17		18		-		
		-		19		20			-	
	-			21		22		-		
		-		23		24			-	
				25		26		-		
		-		27		28			-	
	-			29		30		-		
		-		31		32			-	
	-			33		34		-		
		-		35		36			-	
	-			37		38		-		
		-		39		40			-	
	-			41		42		-		
	1400	1370						1500	1100	

TOTAL: 5.37 KVA PANEL # "A" FEEDER SIZE SEE ONE-LINE DIAGRAM

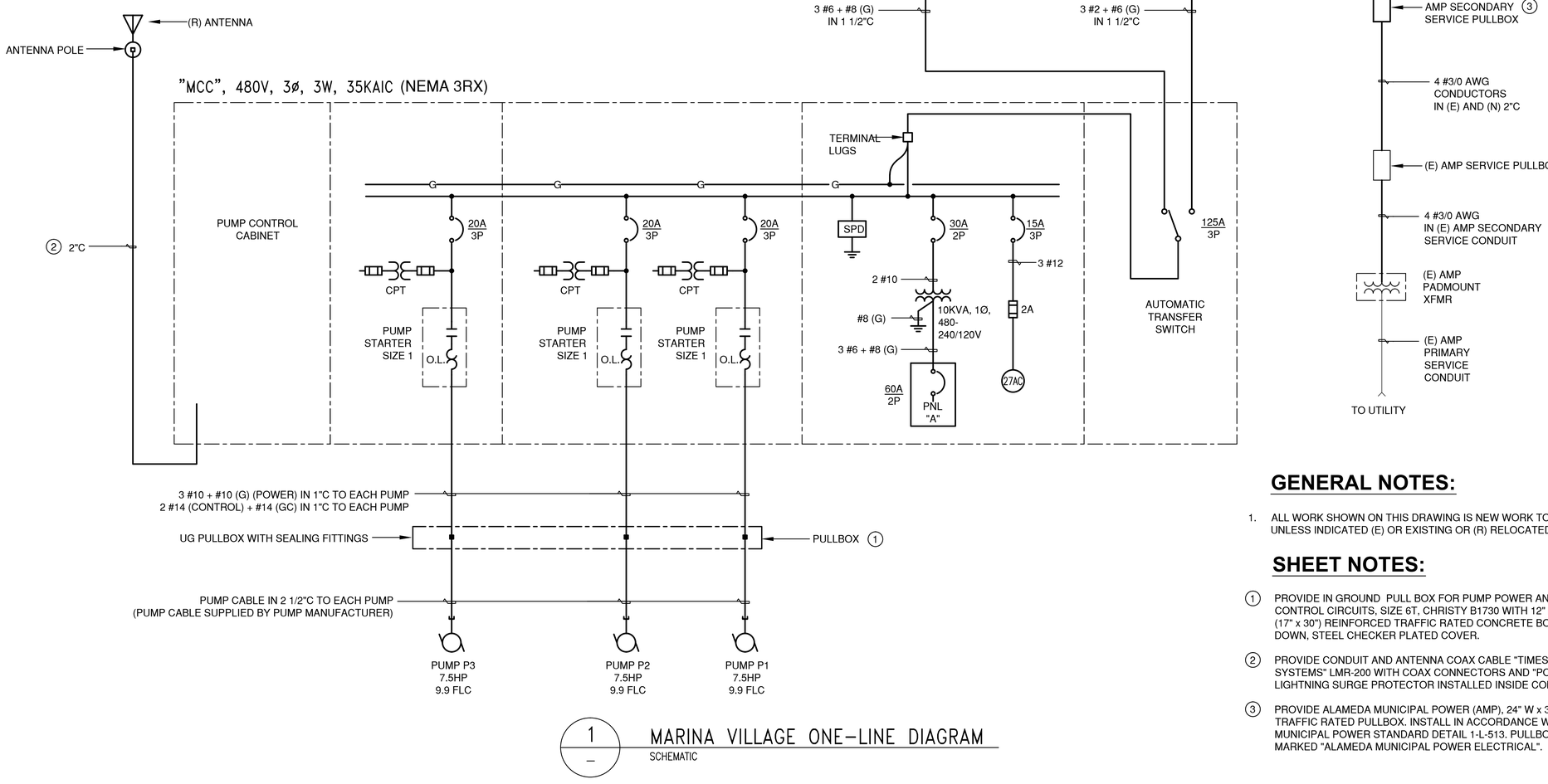

1 — MARINA VILLAGE ONE-LINE DIAGRAM
SCHEMATIC

GENERAL NOTES:

1. ALL WORK SHOWN ON THIS DRAWING IS NEW WORK TO BE PROVIDED UNLESS INDICATED (E) OR EXISTING OR (R) RELOCATED.

SHEET NOTES:

1. PROVIDE IN GROUND PULL BOX FOR PUMP POWER AND MONITORING CONTROL CIRCUITS, SIZE 6T, CHRISTY B1730 WITH 12" EXTENSION (17" x 30") REINFORCED TRAFFIC RATED CONCRETE BOX WITH BOLT DOWN, STEEL CHECKER PLATED COVER.
2. PROVIDE CONDUIT AND ANTENNA COAX CABLE "TIMES MICROWAVE SYSTEMS" LMR-200 WITH COAX CONNECTORS AND "POLYPHASER" LIGHTNING SURGE PROTECTOR INSTALLED INSIDE CONTROL PANEL.
3. PROVIDE ALAMEDA MUNICIPAL POWER (AMP), 24" W x 36" L x 36" D, TRAFFIC RATED PULLBOX. INSTALL IN ACCORDANCE WITH ALAMEDA MUNICIPAL POWER STANDARD DETAIL 1-L-513. PULLBOX SHALL BE MARKED "ALAMEDA MUNICIPAL POWER ELECTRICAL".

NO	REVISIONS	DATE	APPR
1			
2			
3			
4			
5			
6			
7			
8			

REGISTERED PROFESSIONAL ENGINEER — JULIO C. HERDOCIA — No. 9580 — 9/30/20 — ELECTRICAL — STATE OF CALIFORNIA

engineers, inc.
3350 scott blvd., bldg. 11
santa clara, ca. 95054
(408) 986-8558
FAX (408) 986-9627

PROJECT NO. 18697-06

CITY OF ALAMEDA
GROUP 4 - SEWERAGE PUMP STATION RENOVATIONS FOR RELIABILITY AND SAFETY IMPROVEMENTS
MARINA VILLAGE PUMP STATION
ONE LINE - NEW WORK

DATE: 11/27/19
SCALE: AS SHOWN
DESIGN: JCH
DRAWN: VDM
CHECKED: JCH

DWG 9425 CASE 35

E12

22 OF 70

FILE: M:\11697-01 Alemda Pumps \MVL-E11.dwg 06/01/11 15:24 by vuong
XREF: M:\11697-01 Alemda Pumps \APS-BDR.dwg
SCALE =
XREF: M:\11697-01 Alemda Pumps \X-BASE-APS.dwg
BORDER =

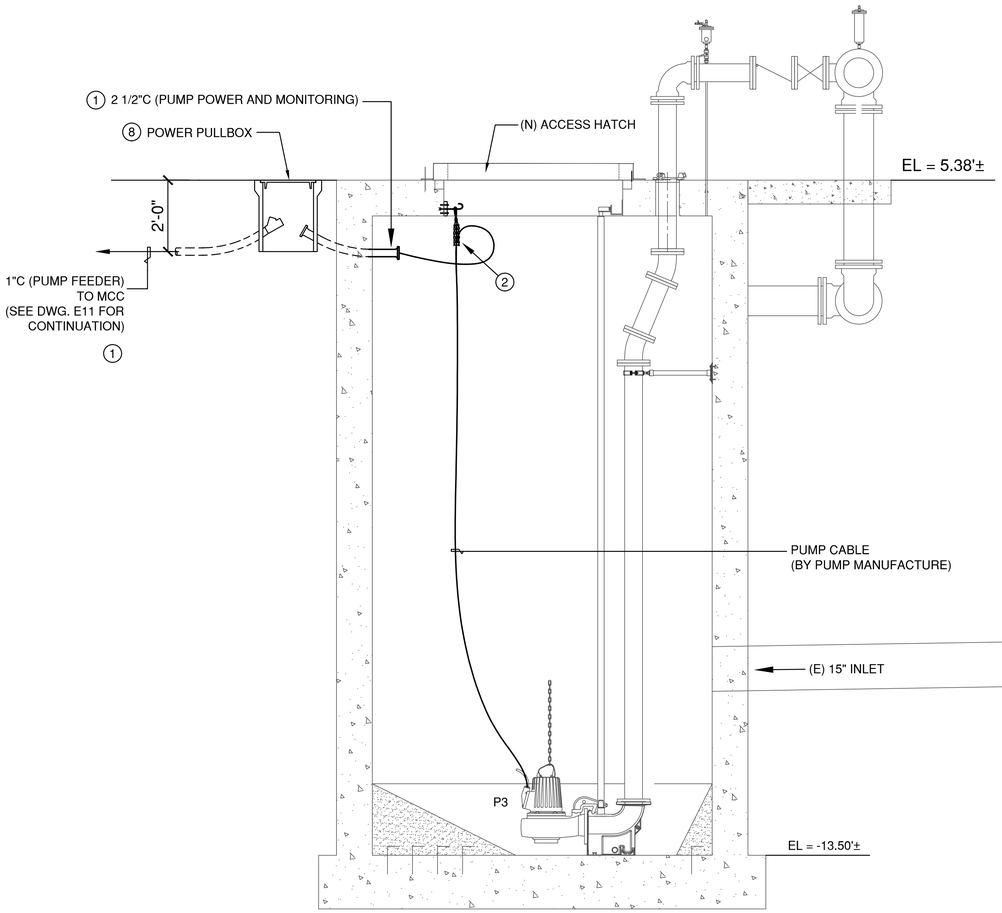

A
–

WET WELL ELEVATION

SCALE: 1/2" = 1'-0"

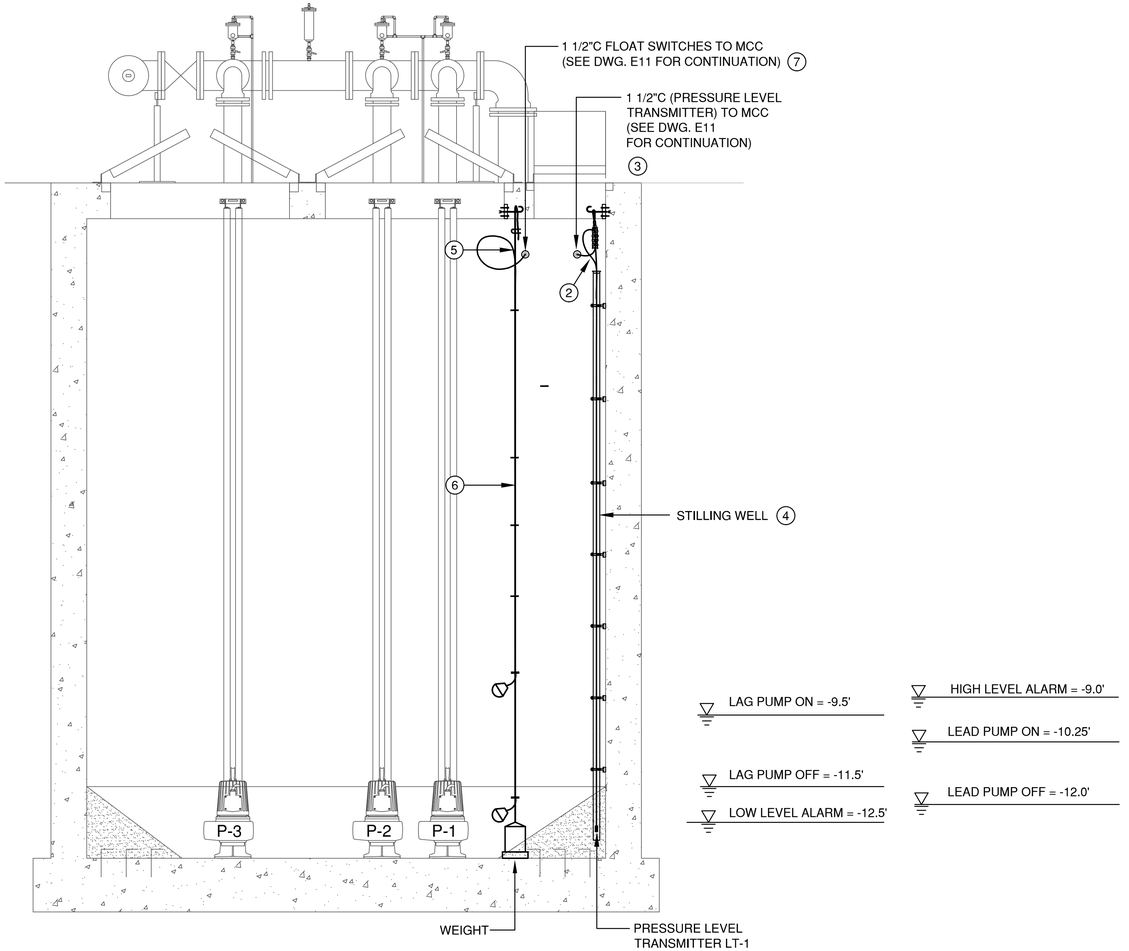

B
–

WET WELL ELEVATION

SCALE: 1/2" = 1'-0"

SHEET NOTES:

1. (1) 2 1/2"C (PUMP FEEDER CABLE).
   INSTALL INSULATED BUSHING AT WET WELL END AND INSULATED GROUNDING BUSHING AT THE POWER PULLBOX. DUCT SEAL BOTH ENDS AFTER CABLE INSTALLATION.
2. STAINLESS STEEL HOOK, STAINLESS STEEL CHANNEL, STAINLESS STEEL ANCHOR BOLTS, AND STAINLESS STEEL CABLE GRIP. (USE CABLE HANGER FOR PRESSURE LEVEL TRANSMITTER)
3. (1) 1 1/2"C (PRESSURE LEVEL TRANSMITTER LT-1).
   INSTALL INSULATED BUSHING AT WET WELL END AND INSULATED GROUNDING BUSHING AT THE CONTROL PULLBOX. DUCT SEAL BOTH END AFTER CABLE INSTALLATION
4. PRESSURE LEVEL TRANSMITTER INSIDE STILLING WELL. SEE CIVIL DWG. D2, DETAIL 8. ADJUST CHAMFER PER CIVIL DRAWINGS.
5. STAINLESS STEEL HOOK, STAINLESS STEEL CHANNEL, STAINLESS STEEL ACHOR BOLT, STAINLESS STEEL THIMBLE, STAINLESS STEEL CABLE CLAMPS, AND PVC COATED 15-POUND WEIGHT.
6. 1/4" DIA. STAINLESS STEEL CABLE WITH FLOAT SWITCH CABLE. TIE WRAP WITH HEAVY PLASTIC TIE AT EVERY 2 FT.
7. (1) 1 1/2"C (FLOAT SWITCHES).
   INSTALL INSULATED BUSHING AT WET WELL END AND INSULATED GROUNDING BUSHING AT THE CONTROL PULLBOX. DUCT SEAL BOTH END AFTER CABLE INSTALLATION.
8. PROVIDE IN GROUND PULL BOX FOR PUMP POWER AND MONITORING CONTROL CIRCUITS, SIZE 6T, CHRISTY B1730 WITH 12" EXTENSION (17" x 30") REINFORCED TRAFFIC RATED CONCRETE BOX WITH BOLT DOWN, STEEL CHECKER PLATED COVER.

NO	REVISIONS	DATE	APPR
1			
2			
3			
4			
5			
6			

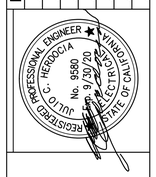

engineers, inc.
3350 scott blvd., bldg. 11
santa clara, ca. 95054
(408) 986-8558
FAX (408) 986-9627
PROJECT NO. 18697-06

CITY OF ALAMEDA
GROUP 4 - SEWERAGE PUMP STATION RENOVATIONS FOR RELIABILITY AND SAFETY IMPROVEMENTS
MARINA VILLAGE PUMP STATION
WET WELL ELEVATIONS

DATE:	11/27/19
SCALE:	AS SHOWN
DESIGN:	JCH
DRAWN:	VDM
CHECKED:	JCH

DWG 9425 CASE 35

E13

23 OF **70**

File: M:\18697-06 Alameda Pumps – Group 4\22_MVL_E13.dwg, 11/27/2019 3:14 PM, Last saved: Vuong, PlotDate: 11/27/2019 3:42 PM By: Vuong Moi, Plot scale: 1:2.5849, Plot Size: ANSI A (8.50 x 11.00 Inches)
Xrefs: SHEET_S&W_Group-4 Cola Ballena and Marina Village_072319

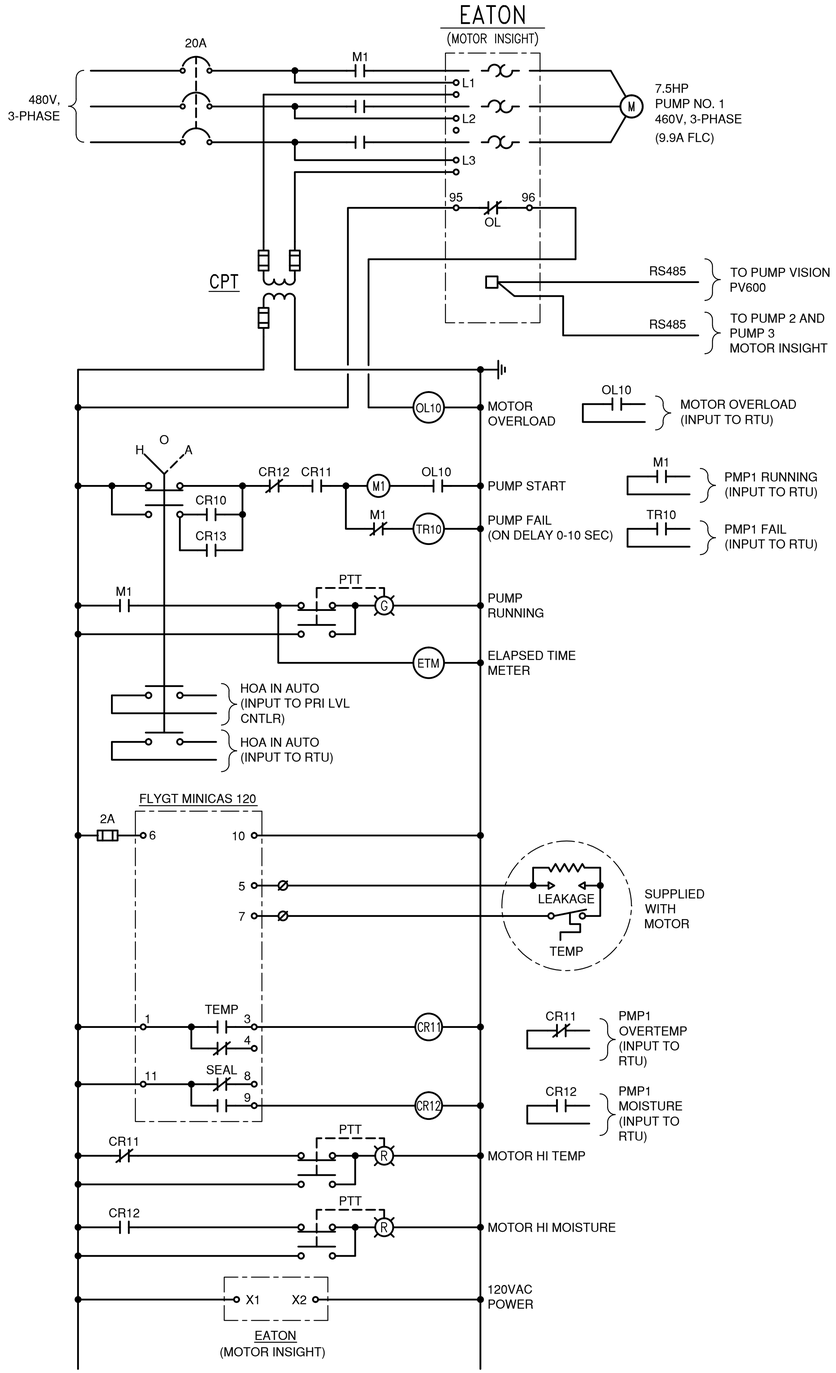

FVNR PUMP No. 1 CONTROL SCHEMATIC DIAGRAM

(SIMILAR FOR PUMP No. 2 AND PUMP No. 3)

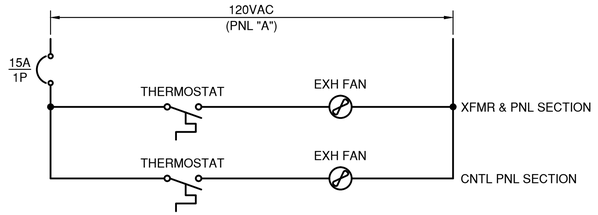

EXHAUST FAN CONTROL SCHEMATIC

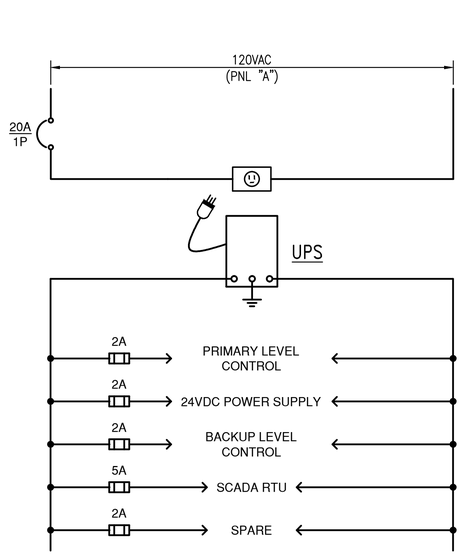

120V UPS SYSTEM SCHEMATIC

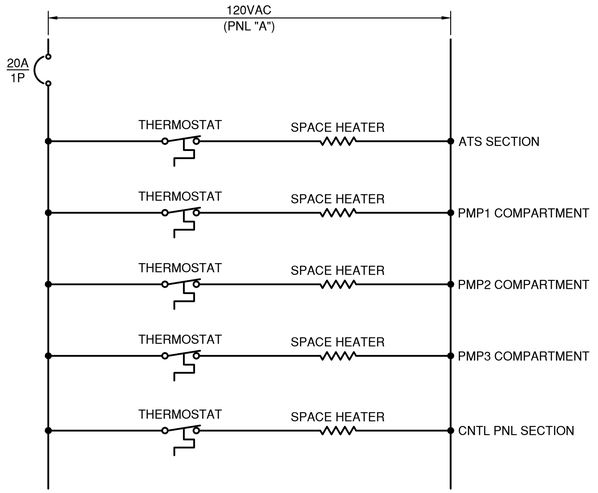

SPACE HEATER CONTROL SCHEMATIC

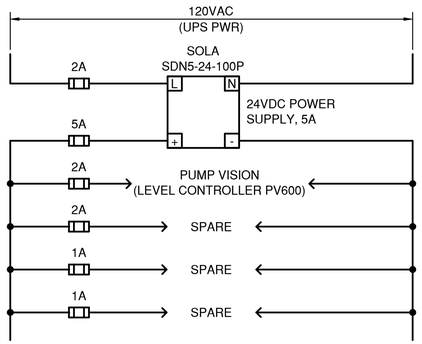

24VDC SYSTEM SCHEMATIC

NO	REVISIONS	DATE	APPR
1			
2			
3			
4			
5			
6			
7			

PROFESSIONAL ENGINEER
REGISTERED
JULIO C. HERDOCIA
No. 9580
9/30/20
ELECTRICAL
STATE OF CALIFORNIA

nbs engineers, inc.
3350 scott blvd., bldg. 11
santa clara, ca. 95054
(408) 986-8558
FAX (408) 986-9627
PROJECT NO. 18697-06

CITY OF ALAMEDA

GROUP 4 - SEWERAGE PUMP STATION RENOVATIONS FOR RELIABILITY AND SAFETY IMPROVEMENTS

MARINA VILLAGE PUMP STATION

CONTROL SCHEMATIC DIAGRAM

DATE:	11/27/19
SCALE:	AS SHOWN
DESIGN:	JCH
DRAWN:	VDM
CHECKED:	JCH

DWG 9425 CASE 35

E14

24 OF **70**

FILE: M:\11697-01 Alemda Pumps \MVL-E12.dwg 05/12/11 11:46 by ccotris
XREF: M:\11697-01 Alemda Pumps \VAPS-BDR.dwg

SCALE = BORDER =

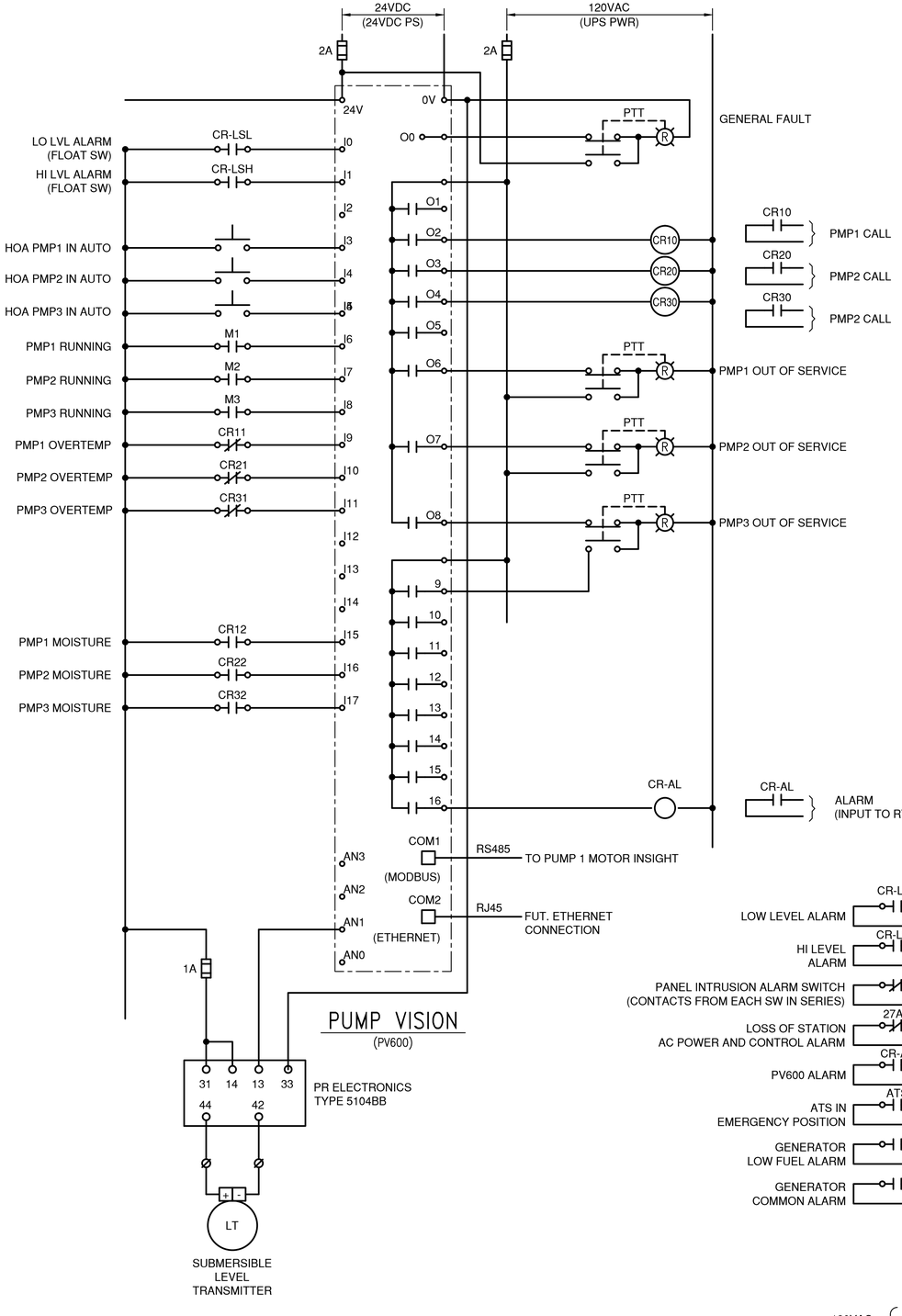

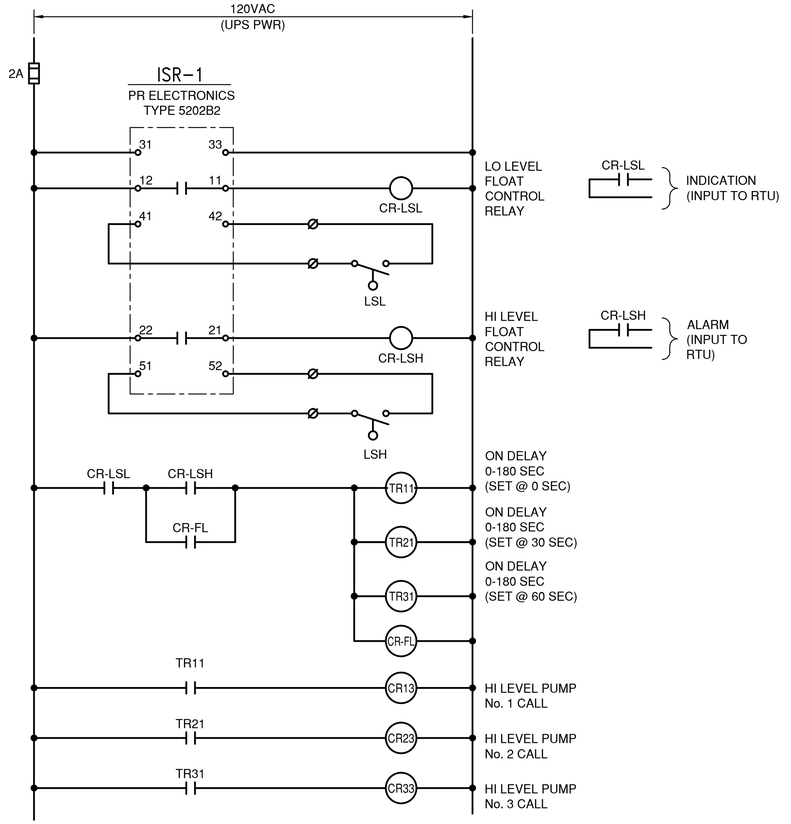

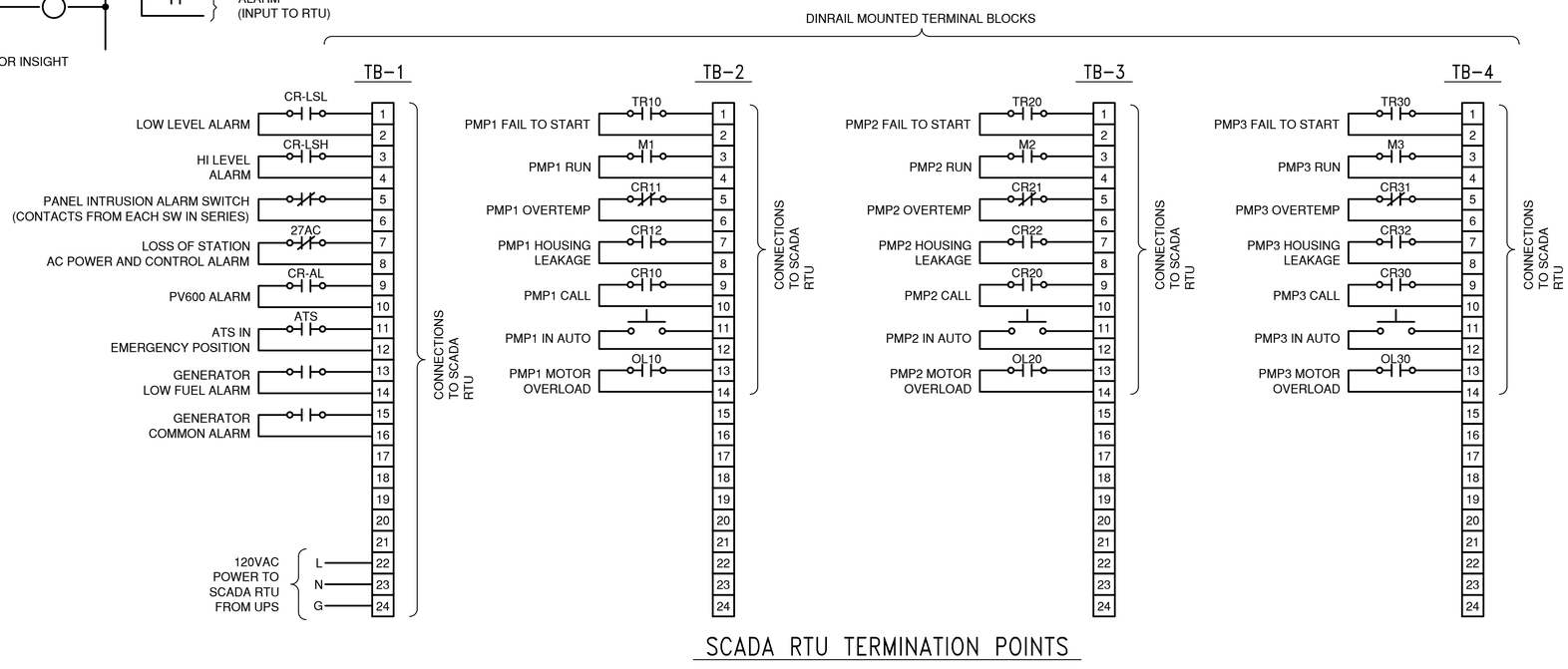

NO	REVISIONS	DATE	APPR
1			
2			
3			
4			
5			
6			

engineers, inc.
3350 scott blvd., bldg. 11
santa clara, ca 95054
(408) 986-8558
FAX (408) 986-9627
PROJECT NO. 18697-06

CITY OF ALAMEDA

GROUP 4 - SEWERAGE PUMP STATION RENOVATIONS FOR RELIABILITY AND SAFETY IMPROVEMENTS

MARINA VILLAGE PUMP STATION

SCHEMATIC DIAGRAM

DATE:	11/27/19
SCALE:	AS SHOWN
DESIGN:	JCH
DRAWN:	VDM
CHECKED:	JCH

DWG 9425 CASE 35

E15

25 OF **70**

FILE: M:\11697-01 Alemda Pumps I\WL-E22.dwg 05/31/11 10:37 by vuong SCALE = BORDER =
XREF: M:\11697-01 Alemda Pumps I\APS-BDR.dwg XREF: M:\11697-01 Alemda Pumps I\3_THREE PHASE-PUMPS - SCHEMATIC.dwg

#24 PARU PUMP STATION

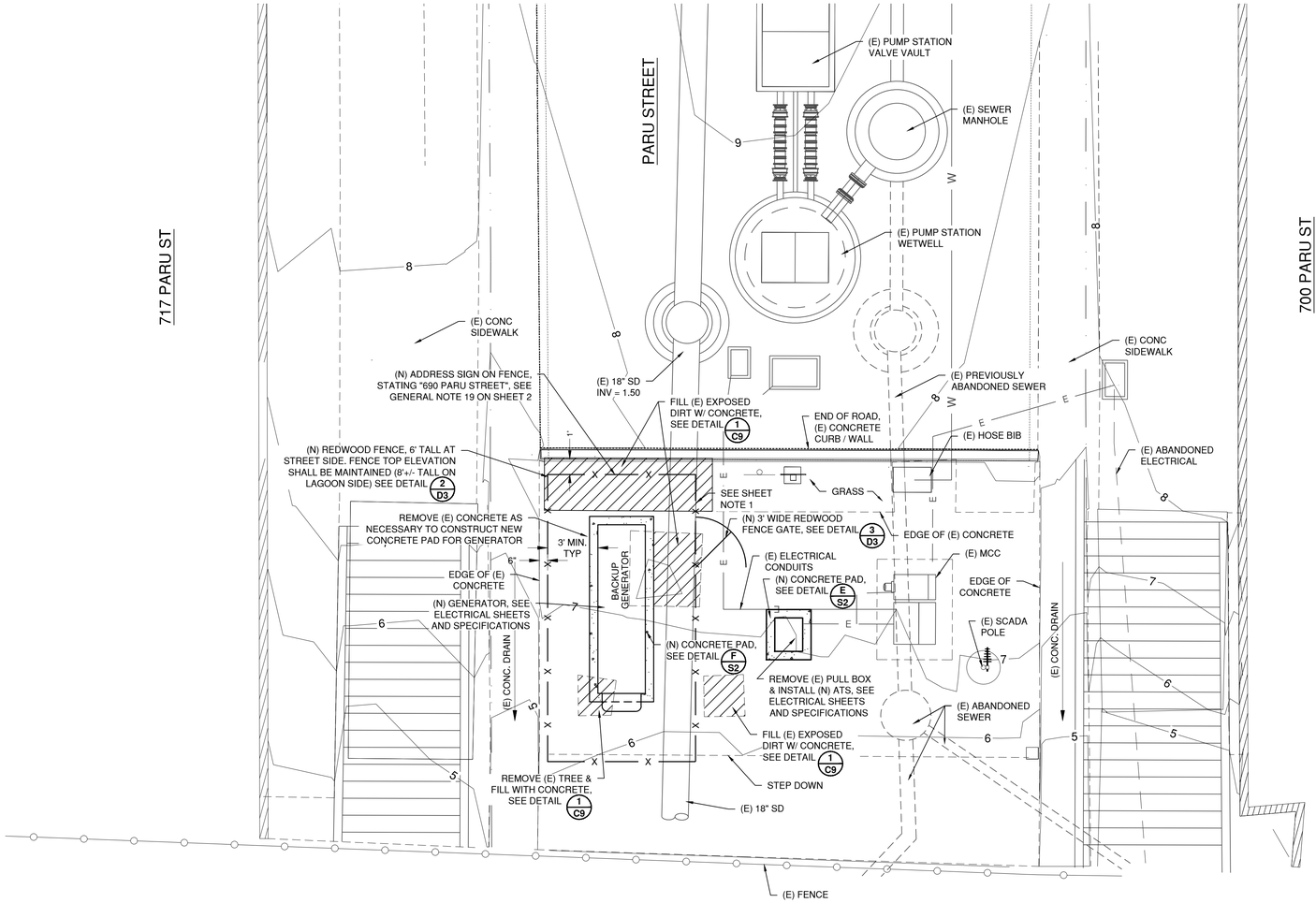

PLAN
SCALE: 1" = 4'

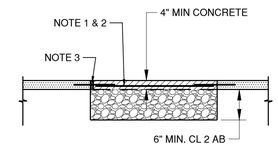

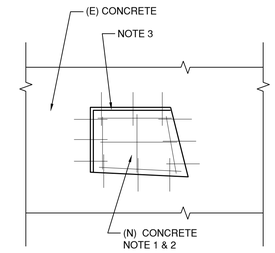

NOTES:
1) INSTALL #4 X 12" MIN. LONG DOWELS AT 18" MAX O.C. EMBED 6" INTO EXISITNG CONCRETE.
2) INSTALL #4 REINFORCEMENT AT 18" MAX O.C. OR EXTEND DOWELS ACROSS (N) CONCRETE AREA W/ 12" MIN. SPLICE LENGTH.
3) 1/2-INCH EXPANSION JOINT FILLER MATERIAL, FULL CONCRETE THICKNESS, TYP AT TWO SIDES AS DIRECTED BY CITY INSPECTOR

CONCRETE IN-FILL 1/C9
SCALE: NTS

PUMP STATION ADDRESS:
690 PARU STREET, ALAMEDA, CA

PARU GENERATOR NOTES:
1. GENERATOR SIZE = 25 KW
2. GENERATOR ENCLOSURE = SOUND LEVEL II
3. GENERATOR NOISE REQUIREMENTS: 67.1 dBA AT 23'
4. APPROXIMATE OUTSIDE DIMENSIONS OF GENERATOR, FUEL TANK, AND ENCLOSURE = 11.2' L X 2.8' W X 4.8' H
5. SEE ELECTRICAL PLANS AND SPECIFICATIONS FOR ADDITIONAL INFORMATION AND REQUIREMENTS

SHEET NOTES:
1. INSTALL KNOX BOX ON FENCE, SEE GENERAL NOTE 20 ON SHEET 2.

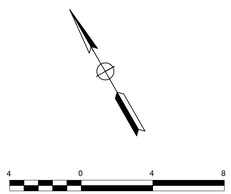

SCALE: 1 INCH = 4 FEET

NO	REVISIONS	DATE	APPR
1			
2			
3			
4			
5			
6			
7			

REGISTERED PROFESSIONAL ENGINEER — CHRISTOPHER L. PLUCK — No. 72844 — CIVIL — STATE OF CALIFORNIA

Schaaf & Wheeler
CONSULTING CIVIL ENGINEERS
1171 HOMESTEAD RD, STE. 255
SANTA CLARA, CA 95050
(408) 246-4848

CITY OF ALAMEDA
GROUP 4 - SEWERAGE PUMP STATION RENOVATIONS FOR RELIABILITY AND SAFETY IMPROVEMENTS
PARU SITE PLAN

DATE:	11/27/19
SCALE:	AS SHOWN
DESIGN:	CLP
DRAWN:	CLP
CHECKED:	BLS

DWG 9425 CASE 35

C9

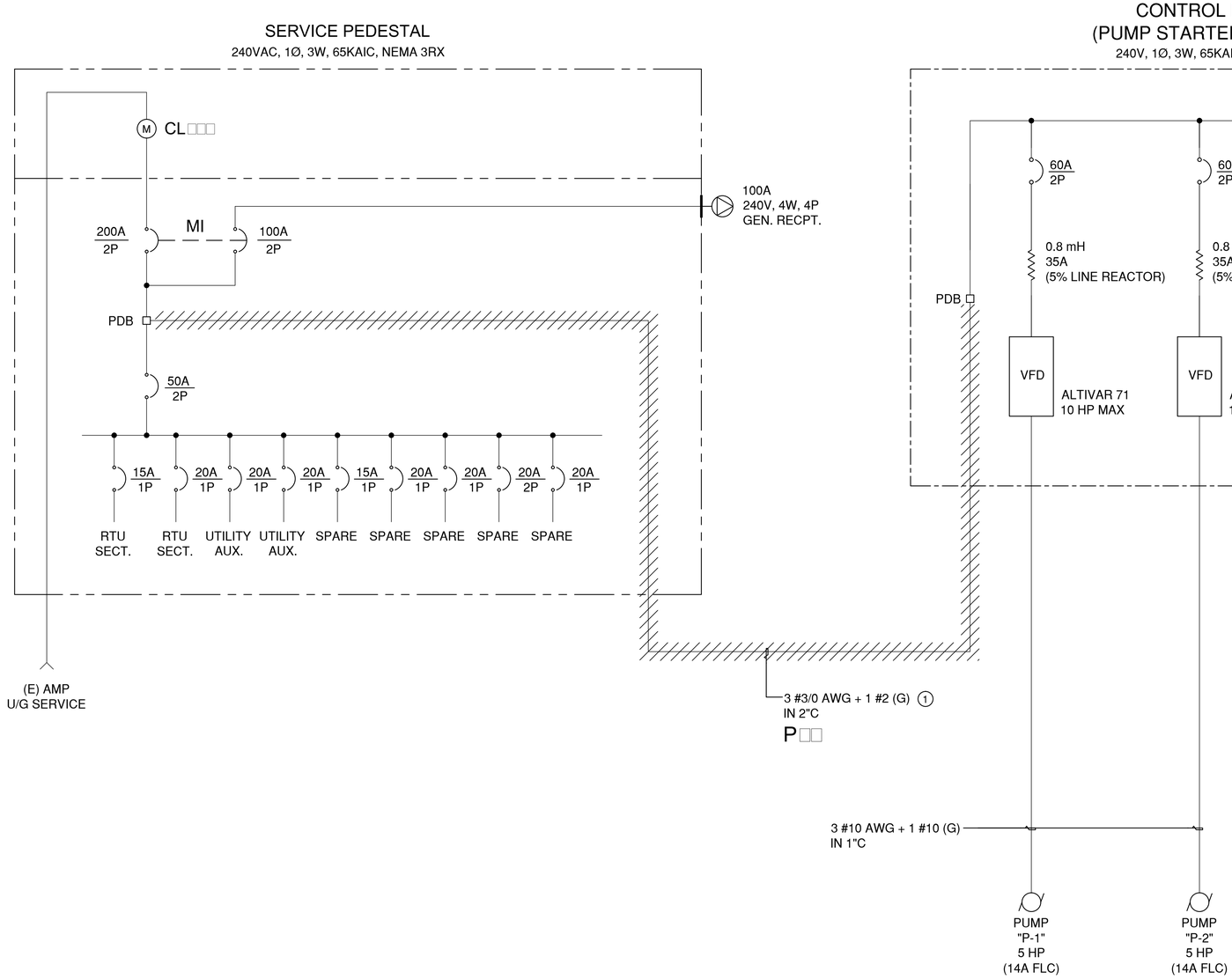

SHEET NOTES:

(1) REMOVE CONDUCTORS, ABANDON CONDUIT IN PLACE.

1 - ONE LINE □REMOVAL WORK

SCHEMATIC

NO	REVISIONS	DATE	APPR
1			
2			
3			
4			
5			
6			
7			

REGISTERED PROFESSIONAL ENGINEER JULIO C. HERDOCIA No. 9580 9/30/20 ELECTRICAL STATE OF CALIFORNIA

mb engineers, inc.
3350 scott blvd., bldg. 11
santa clara, ca. 95054
(408) 986-8558
FAX (408) 986-9627
PROJECT NO. 18697-06

CITY OF ALAMEDA
GROUP 4 - SEWERAGE PUMP STATION RENOVATIONS FOR RELIABILITY AND SAFETY IMPROVEMENTS
PARU PUMP STATION
ONE LINE - REMOVAL WORK

DATE:	11/27/19
SCALE:	AS SHOWN
DESIGN:	JCH
DRAWN:	VDM
CHECKED:	JCH

DWG 9425 CASE 35

E16

27 OF 70

File: M:\18697-06 Alameda Pumps - Group 4\26_PAR_E16.dwg, 11/7/2019 5:28 PM, Last saved: Vuong, PlotDate: 11/27/2019 3:42 PM By: Vuong Mai, Plot scale: 1:1, Plot Size: ARCH expand D (36.00 x 24.00 inches)
Xrefs: SHEET_S&W_Group-4

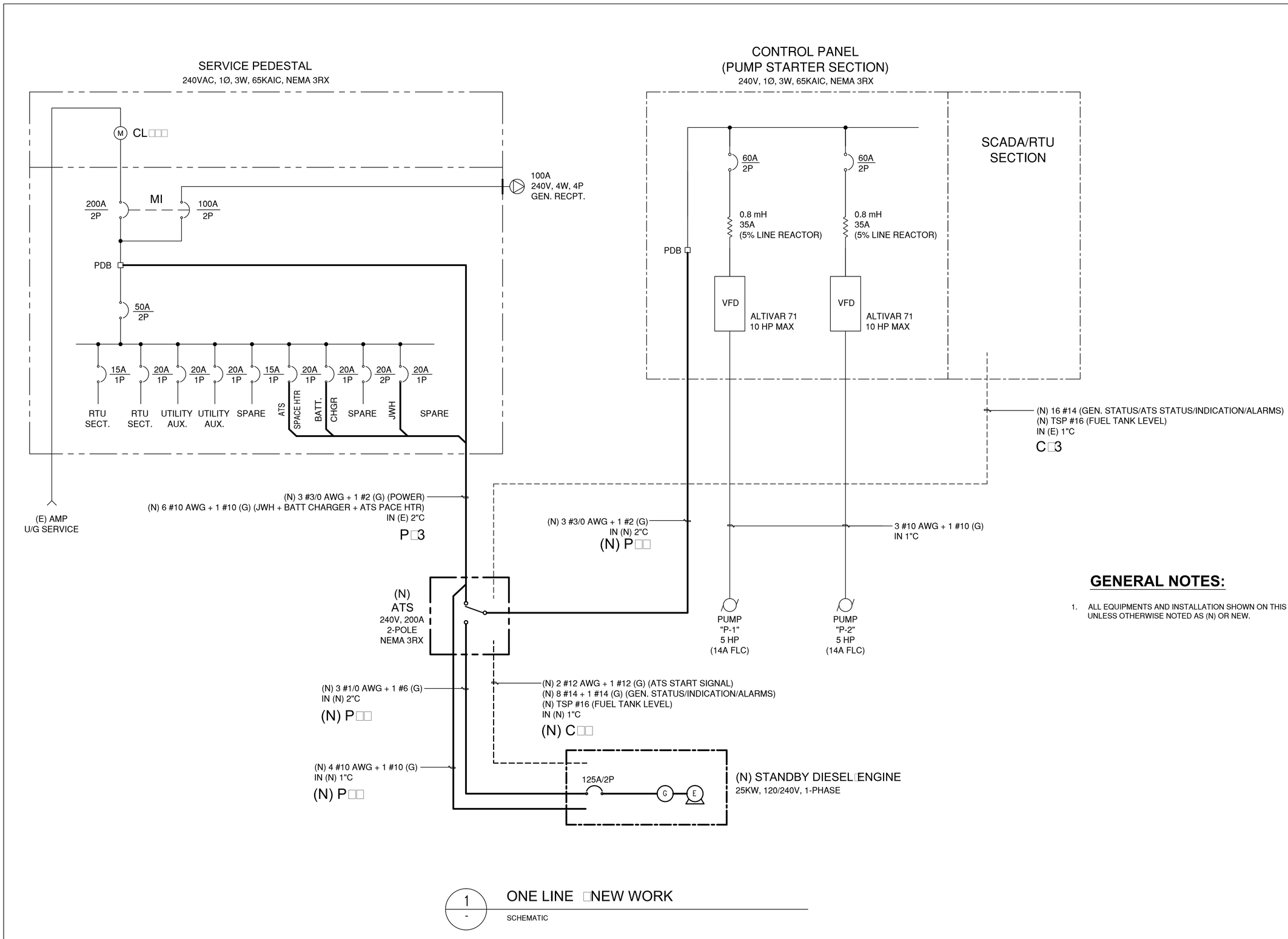

1 - ONE LINE □NEW WORK

SCHEMATIC

GENERAL NOTES:

1. ALL EQUIPMENTS AND INSTALLATION SHOWN ON THIS DRAWING IS EXISTING UNLESS OTHERWISE NOTED AS (N) OR NEW.

NO	REVISIONS	DATE	APPR
1			
2			
3			
4			
5			
6			
7			

REGISTERED PROFESSIONAL ENGINEER
JULIO C. HERBOCIA
No. 9580
ELECTRICAL
STATE OF CALIFORNIA
9/30/20

engineers, inc.
3350 scott blvd., bldg. 11
santa clara, ca 95054
(408) 986-8558
FAX (408) 986-9627
PROJECT NO. 18697-06

CITY OF ALAMEDA
GROUP 4 - SEWERAGE PUMP STATION RENOVATIONS FOR RELIABILITY AND SAFETY IMPROVEMENTS
PARU PUMP STATION
ONE LINE - NEW WORK

DATE:	11/27/19
SCALE:	AS SHOWN
DESIGN:	JCH
DRAWN:	VDM
CHECKED:	JCH

DWG 9425 CASE 35

E17

28 OF **70**

File: M:\18697-06 Alameda Pumps - Group 4\27_PAR_E17.dwg, 11/7/2019 5:28 PM, Last saved: Vuong, PlotDate: 11/27/2019 3:42 PM By: Vuong Mai, Plot scale: 1:1, Plot Size: ARCH expand D (36.00 x 24.00 inches)
Xrefs: SHEET_S&W_Group-4

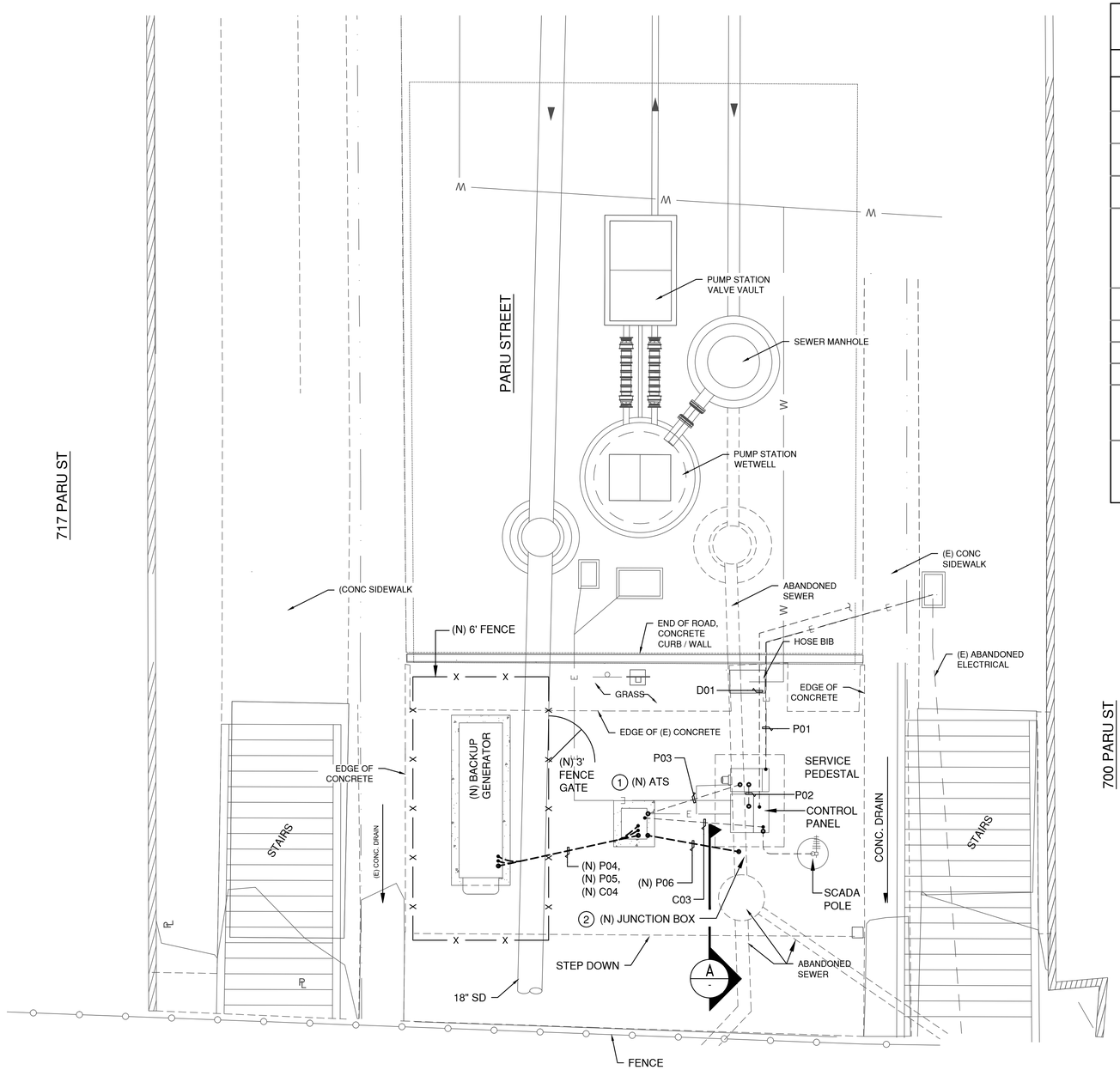

1 / - PUMP STATION □CONDUIT PLAN

SCALE: 1" = 4'-0"

SCALE: 1 INCH = 4 FEET

CONDUIT AND CIRCUIT SCHEDULE

RACEWAY DATA					CABLE DATA					
CKT. NO	FROM	TO	TYPE	SIZE	TYPE	QTY	SIZE	GND	VOLTS	NOTES
D01	CONTROL PANEL	TEL BOX	RSC	1"						FUTURE USE
P01	UTILITY PULLBOX	SERVICE PEDESTAL/ METER	RSC	3"		3	#3/0 AWG	#2	600	ELECTRICAL SERVICE
P02	SERVICE PEDESTAL/METER	CONTROL PANEL	RSC	2"						(3)
P03	SERVICE PEDESTAL/METER	(N) ATS	RSC	2"	XHHW-2	3	(N) #3/0 AWG	(N) #2	600	NORMAL POWER TO ATS
					XHHW-2	6	(N) #10 AWG	(N) #10	600	FEEDER JACKET WATER HEATER, BATTERY CHARGER, AND ATS SPACE HEATER
(N) P04	(N) GENERATOR	(N) ATS	RSC	1"	XHHW-2	4	(N) #10 AWG	(N) #10	600	FEEDER JACKET WATER HEATER AND BATTERY CHARGER
(N) P05	(N) GENERATOR	(N) ATS	RSC	2"	XHHW-2	3	(N) #1/0 AWG	(N) #6	600	EMERGENCY POWER TO ATS
(N) P06	(N) ATS	CONTROL PANEL	RSC	2"	XHHW-2	3	(N) #3/0 AWG	(N) #2	600	FEEDER TO CONTROL PANEL
C03	(N) ATS	CONTROL PANEL	RSC	1"	XHHW-2	16	(N) #14 AWG	(N) #14	600	GEN. STATUS/ATS STATUS/ INDICATION/ALARMS
					TSP	1	(N) #16 AWG	-	600	FUEL TANK LEVEL
(N) C04	(N) ATS	(N) GENERATOR	RSC	1"	XHHW-2	2	(N) #12 AWG	(N) #12	600	ATS START SIGNAL
					XHHW-2	8	(N) #14 AWG	(N) #14	600	GEN. STATUS/INDICATION/ALARMS
					TSP	1	(N) #16 AWG	-	600	FUEL TANK LEVEL

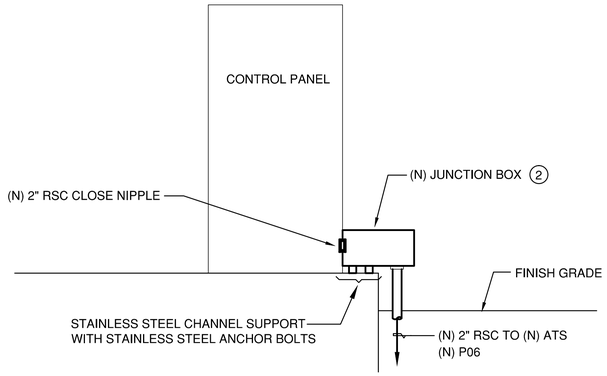

VIEW A □A

NOT TO SCALE

GENERAL NOTES:

1. ALL EQUIPMENTS AND INSTALLATION SHOWN ON THIS DRAWING IS EXISTING UNLESS OTHERWISE NOTED AS (N) OR NEW.

SHEET NOTES:

(1) REMOVE (E) CONCRETE BOX, RETAIN (E) UNDERGROUND CONDUITS. CONSTRUCT (N) ATS CONCRETE PAD AND EXTEND (E) P03 AND C03 CONDUITS TO 1" ABOVE PAD AND TERMINATE WITH INSULATED GROUNDING BUSHING.

(2) PROVIDE JUCNTION BOX, NEMA 4X, STAINLESS STEEL 304, 16" W x 20" L x 8" D, WITH DOOR CLAMPS AND PADLOCK HASP.

(3) FEEDER CONDUCTORS TO BE DISCONNECTED AND REMOVED.

NO	DATE	APPR	REVISIONS
1			
2			
3			
4			
5			
6			
7			

PROFESSIONAL ENGINEER ★ REGISTERED ★ JULIO C. HERDOCIA No. 9580 9/30/20 ELECTRICAL STATE OF CALIFORNIA

engineers, inc.
3350 scott blvd., bldg. 11
santa clara, ca 95054
(408) 986-8558
FAX (408) 986-9627
PROJECT NO. 18697-06

CITY OF ALAMEDA
GROUP 4 - SEWERAGE PUMP STATION RENOVATIONS FOR RELIABILITY AND SAFETY IMPROVEMENTS
PARU PUMP STATION CONDUIT PLAN

DATE:	11/27/19
SCALE:	AS SHOWN
DESIGN:	JCH
DRAWN:	VDM
CHECKED:	JCH

DWG 9425 CASE 35

E18

29 OF **70**

File: M:\18697-06 Alameda Pumps - Group 4\28_PAR_E18.dwg, 11/7/2019 5:28 PM, Last saved: Vuong, PlotDate: 11/27/2019 3:43 PM By: Vuong Mai, Plot scale: 1:1, Plot Size: ARCH expand D (36.00 x 24.00 inches)
Xrefs: SHEET_34W_Group-4 PARU PS_2_011118

#22 GRAND OTIS PUMP STATION

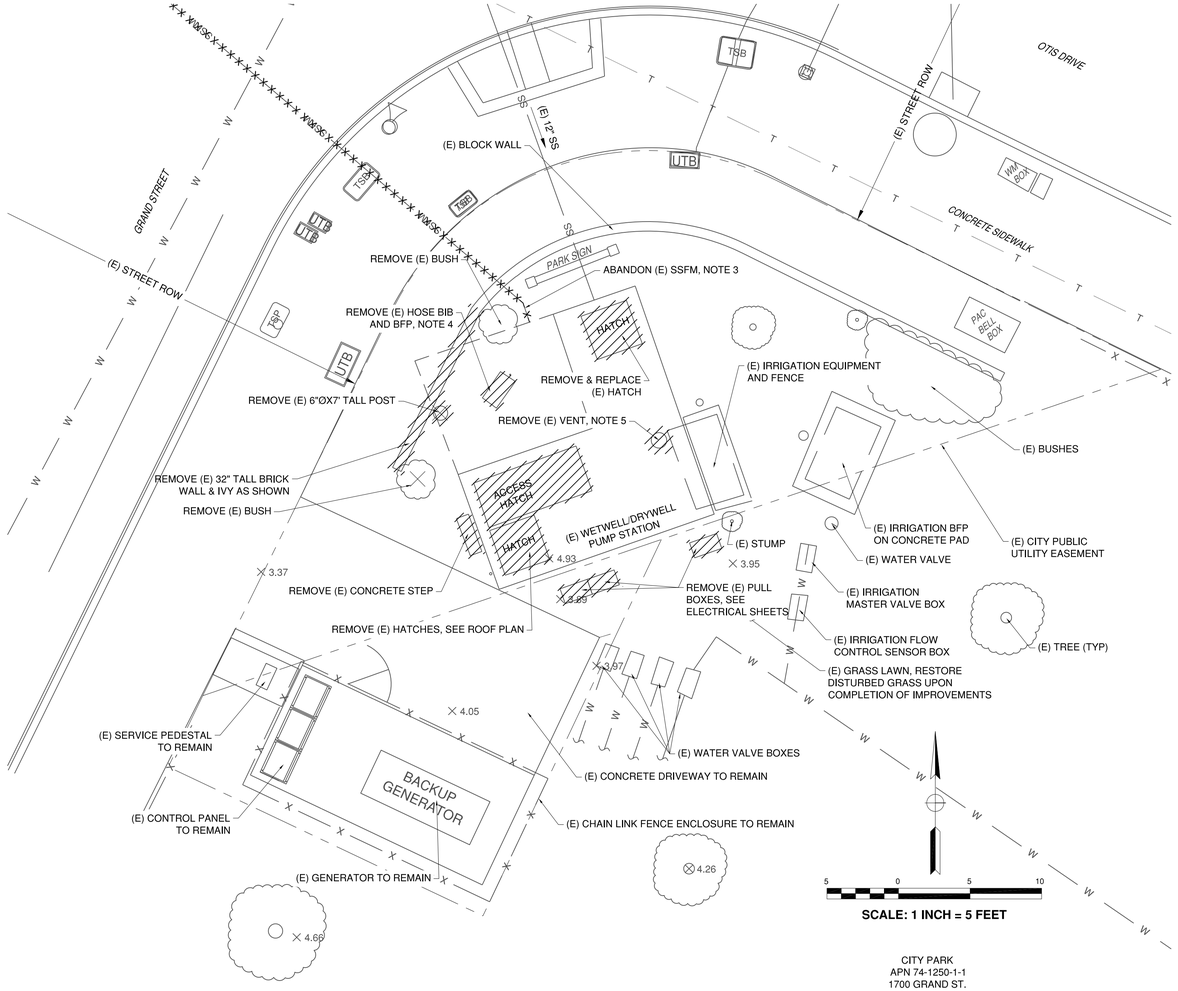

CITY PARK
APN 74-1250-1-1
1700 GRAND ST.

GRAND-OTIS BASIS OF BEARINGS

HELD BEARING AND COORDINATES OF FOUND MONUMENTS ON OTIS DRIVE AS SHOWN ON TRACT 1866 SHEET 7 OF 9.
BEARING = 333° 48' 58"
MON #2 AT INTERSECTION OF GRAND ST. AND OTIS DR. = N464672.28 E1490970.51

GRAND-OTIS BENCHMARKS

HELD SSMH 711 RIM AS SHOWN ON SHEET C12, SEWER SYSTEM SCHEMATIC ELEV. = 4.40

GRAND-OTIS SITE DEMOLTION PLAN

SCALE: 1" = 5'

SHEET NOTES:

1. CONTRACTOR TO REMOVE ALL ELECTRICAL EQUIPMENT FROM DRYWELL INCLUDING, BUT NOT LIMITED TO, ELECTRICAL PANELS, CONDUITS, LIGHTS, AND SWITCHES. FOR DETAILED ELECTRICAL DEMOLITION REQUIREMENTS, REFER TO ELECTRICAL SHEETS.
2. CONTRACTOR SHALL REMOVE EXISTING PUMPS, PADS, SUCTION PIPING AND DISCHARGE PIPING AS SHOWN ON THE DRAWINGS AND AS NECESSARY TO FACILITATE THE IMPROVEMENTS DETAILED HEREIN.
3. ABANDON (E) 8" ACP SSFM BY PLUGGING ENDS W/ 2 FT MIN. OF CONCRETE & FILLING PIPE W/ CDF OR SAND, SEE SPECIFICATION SECTION 02532.
4. REMOVE EXISTING WATER SERVICE WITHIN LIMITS OF EXCAVATION AND CAP ENDS. COORDINATE WITH EAST BAY MUNICIPAL DISTRICT (EBMUD) & THE CITY TO ABANDON THE WATER SERVICE, SEE SPECIFICATION SECTION 02532-3.02.C FOR ADDITIONAL REQUIREMENTS.
5. EXISTING VENT IS 14"Ø AND EXTENDS APPROXIMATELY 11'-6" ABOVE TOP OF WETWELL.
6. CONTRACTOR SHALL PROVIDE CONTINUOUS PUMPING CAPACITY FROM THE TIME WHEN THE EXISTING STATION IS TAKEN OFFLINE UNTIL THE IMPROVEMENTS HAVE BEEN ACCEPTED BY THE CITY.
7. CONTRACTOR SHALL PROVIDE A MINIMUM FIRM STATION CAPACITY OF 740 GPM.
8. NEAREST SSMH FOR BYPASS PUMPING DISCHARGE IS LOCATED APPROXIMATELY 500' NORTH-WEST OF THE PUMP STATION IN OTIS DR. SEE SEWER SYSTEM SCHEMATIC ON SHEET C11. WORK HOURS FOR BYPASS PUMPING WITH ABOVE GROUND PIPING ARE LIMITED TO HOURS WHERE CONTRACTOR PERSONNEL ARE ON SITE TO MONITOR ABOVE GRADE PIPING. CONTRACTOR SHALL COORDINATE REQUIREMENTS WITH CITY.
9. RESTORE ALL LANDSCAPING IN KIND UPON COMPLETION OF IMPROVEMENTS.
10. SEE ELECTRICAL SHEETS FOR ADDITIONAL PUMP STATION IMPROVEMENTS.

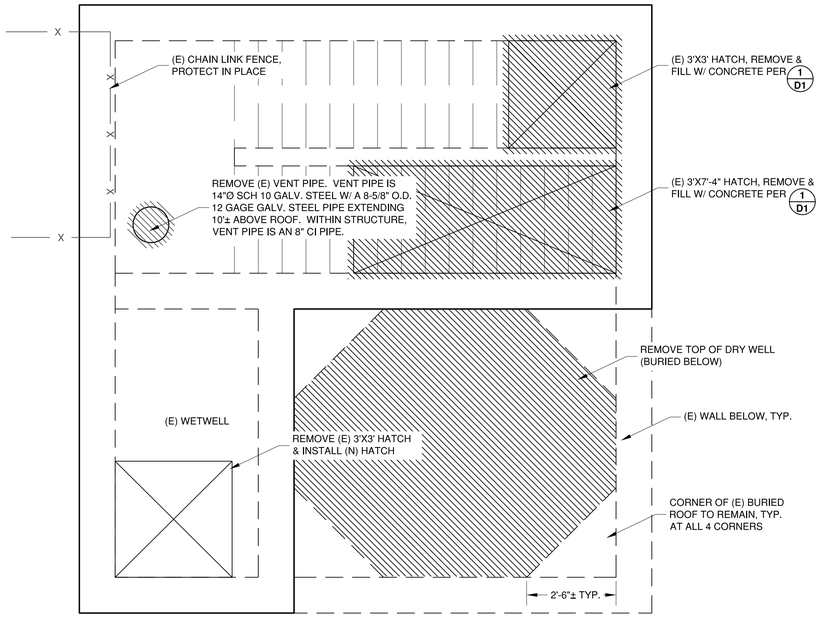

ROOF DEMOLITION PLAN VIEW

SCALE: 1/2" = 1'

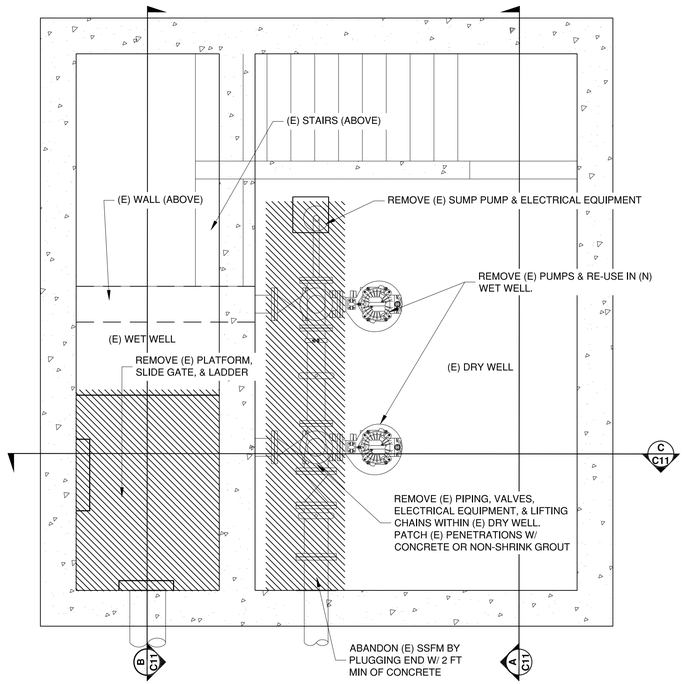

DEMOLITION PLAN VIEW AT EL -5.0

SCALE: 1/2" = 1'

NO	REVISIONS	DATE	APPR
1			
2			
3			
4			
5			
6			
7			

REGISTERED PROFESSIONAL ENGINEER · SHICK · No. 58482 · CIVIL · STATE OF CALIFORNIA

Schaaf & Wheeler
CONSULTING CIVIL ENGINEERS
1171 HOMESTEAD RD, STE. 255
SANTA CLARA, CA 95050
(408) 246-4848

CITY OF ALAMEDA
GROUP 4 - SEWERAGE PUMP STATION RENOVATIONS FOR RELIABILITY AND SAFETY IMPROVEMENTS
GRAND-OTIS SITE PLAN & DEMOLITION PLANS

DATE:	11/27/19
SCALE:	AS SHOWN
DESIGN:	CLP
DRAWN:	CLP
CHECKED:	BLS

DWG 9425 CASE 35

C10

30 OF 70

#22 GRAND OTIS PUMP STATION

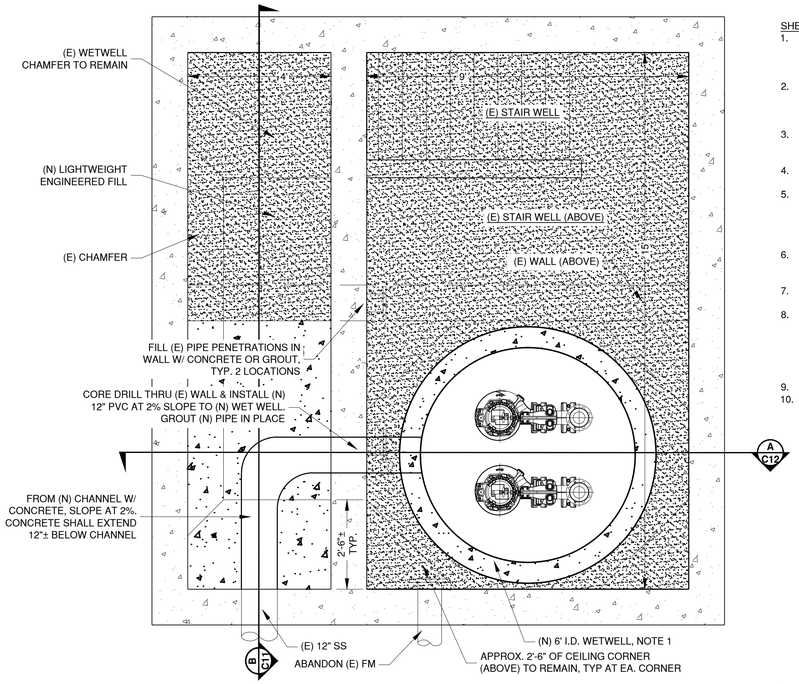

PUMP STATION IMPROVEMENT PLAN AT EL -10

SCALE: 1/2" = 1'

SHEET NOTES:

1. WALL THICKNESS OF NEW WET WELL SHALL BE 8-INCHES OR LESS IN ORDER TO ADEQUATELY FIT WITHIN THE EXISTING STRUCTURE. CONTRACTOR SHALL CONFIRM EXACT THICKNESS REQUIREMENTS PRIOR TO ORDERING PRECAST STRUCTURE, SEE SECTION 01140-1.15.
2. CONTRACTOR TO REMOVE ALL ELECTRICAL EQUIPMENT FROM DRYWELL INCLUDING, BUT NOT LIMITED TO, ELECTRICAL PANELS, CONDUITS, LIGHTS, AND SWITCHES. FOR DETAILED ELECTRICAL DEMOLITION REQUIREMENTS, REFER TO ELECTRICAL SHEETS.
3. CONTRACTOR SHALL REMOVE EXISTING PUMPS, PADS, SUCTION PIPING AND DISCHARGE PIPING AS SHOWN ON THE DRAWINGS AND AS NECESSARY TO FACILITATE THE IMPROVEMENTS DETAILED HEREIN.
4. ABANDON (E) 8" ACP SSFM BY PLUGGING ENDS W/ 2 FT MIN. OF CONCRETE & FILLING PIPE W/ CDF OR SAND.
5. CONTRACTOR SHALL REMOVE ALL VENTILATION EQUIPMENT INCLUDING FANS, DUCTING AND RELATED CONDUIT, ETC. WHERE DUCTING PENETRATES PUMP STATION WALLS, CONTRACTOR SHALL TRIM DUCTING FLUSH WITH THE WALL AND FILL WITH NON-SHRINK GROUT. DO NOT REMOVE VENTILATION ELBOW LOCATED IN THE STAIRWELL.
6. CONTRACTOR SHALL PROVIDE CONTINUOUS PUMPING CAPACITY FROM THE TIME WHEN THE EXISTING STATION IS TAKEN OFFLINE UNTIL THE IMPROVEMENTS HAVE BEEN ACCEPTED BY THE CITY.
7. CONTRACTOR SHALL PROVIDE A MINIMUM FIRM STATION CAPACITY OF 740 GPM.
8. NEAREST SSMH FOR BYPASS PUMPING DISCHARGE IS LOCATED APPROXIMATELY 500' NORTH-WEST OF THE PUMP STATION IN OTIS DR. SEE SEWER SYSTEM SCHEMATIC ON SHEET C11. WORK HOURS FOR BYPASS PUMPING WITH ABOVE GROUND PIPING ARE LIMITED TO HOURS WHERE CONTRACTOR PERSONNEL ARE ON SITE TO MONITOR ABOVE GRADE PIPING. CONTRACTOR SHALL COORDINATE REQUIREMENTS WITH CITY.
9. RESTORE ALL LANDSCAPING IN KIND UPON COMPLETION OF IMPROVEMENTS.
10. SEE ELECTRICAL SHEETS FOR ADDITIONAL PUMP STATION IMPROVEMENTS.

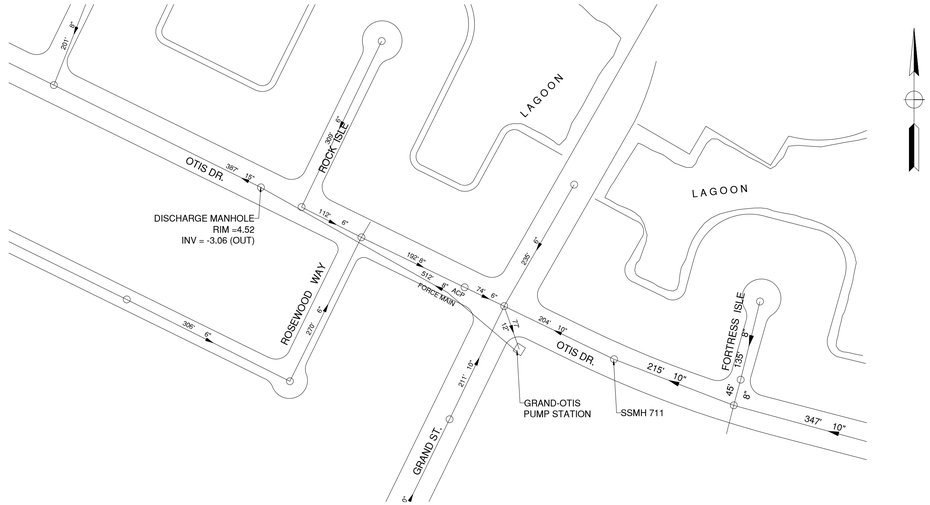

SEWER SYSTEM SCHEMATIC MAP

NO SCALE

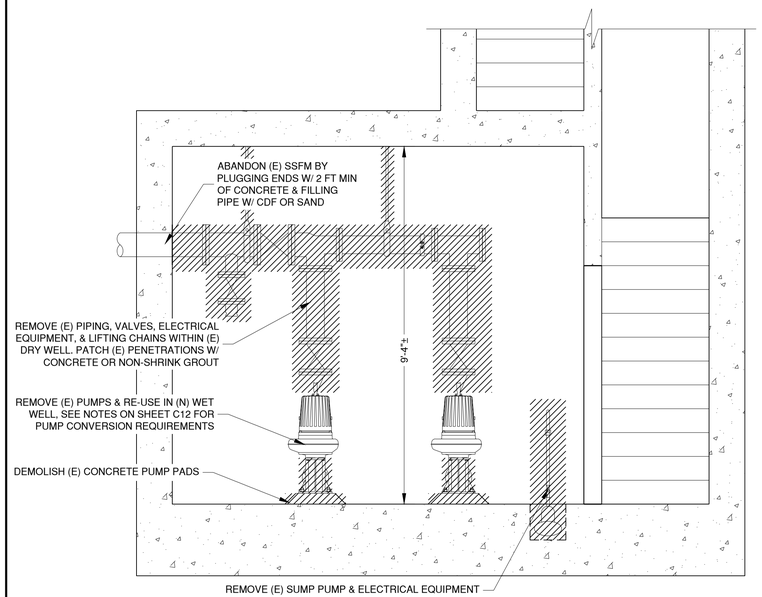

SECTION - DEMOLITION OF (E) DRY WELL A C11

SCALE: 1/2" = 1'

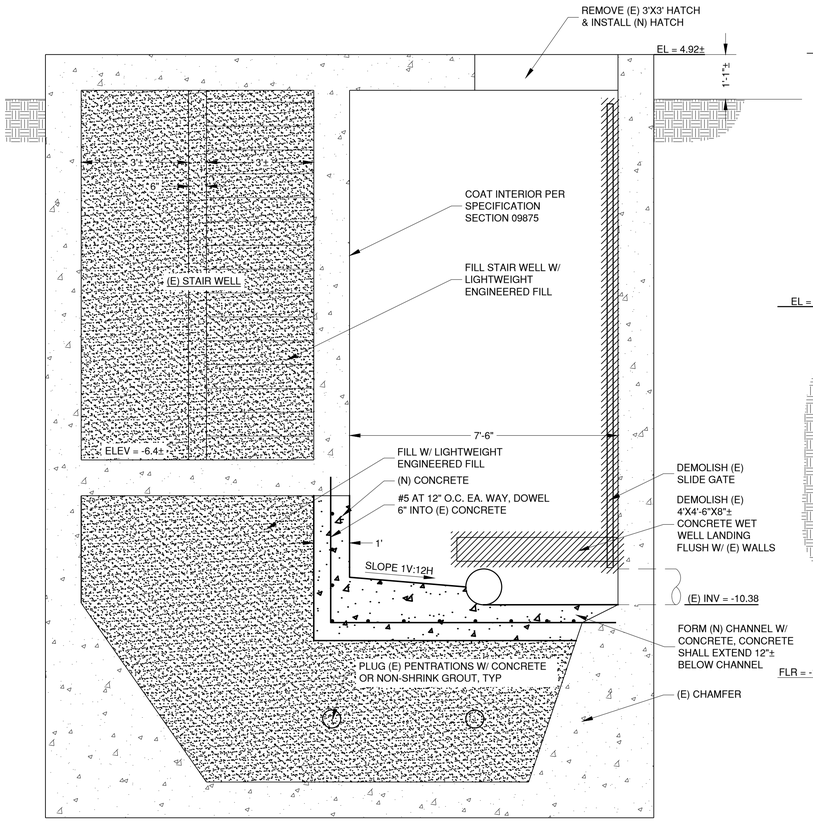

SECTION B C11

SCALE: 1/2" = 1'

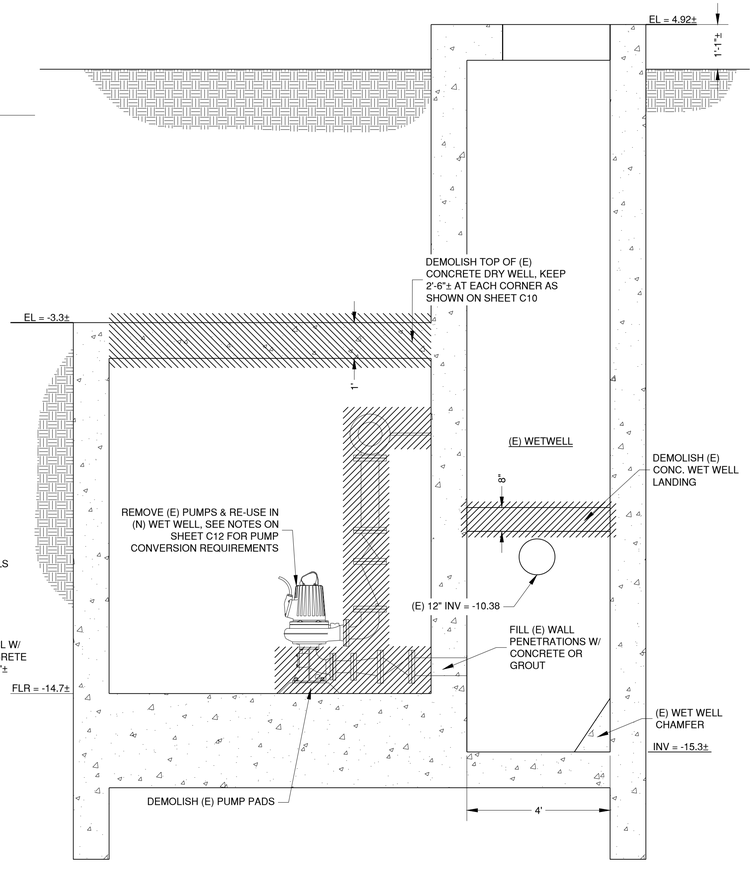

DEMOLITION SECTION C C11

SCALE: 1/2" = 1'

NO	REVISIONS	DATE	APPR
1			
2			
3			
4			
5			
6			

PROFESSIONAL ENGINEER — CHRISTOPHER L. PUSICK — No. 85844 — CIVIL — STATE OF CALIFORNIA

Schaaf & Wheeler
CONSULTING CIVIL ENGINEERS
1171 HOMESTEAD RD, STE. 255
SANTA CLARA, CA 95050
(408) 246-4848

CITY OF ALAMEDA

GROUP 4 - SEWERAGE PUMP STATION RENOVATIONS FOR RELIABILITY AND SAFETY IMPROVEMENTS

GRAND-OTIS PLAN & SECTIONS

DATE:	11/27/19
SCALE:	AS SHOWN
DESIGN:	CLP
DRAWN:	CLP
CHECKED:	BLS

DWG 9425 CASE 35

C11

31 OF **70**

#22 GRAND OTIS PUMP STATION

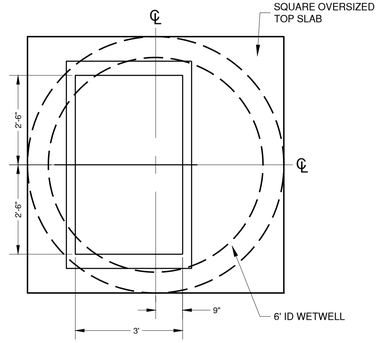

WETWELL HATCH NOTES:
1. ACCESS HATCH DIMENSIONS SHOWN ARE CLEAR OPENINGS.
2. ACCESS HATCH SHALL BE EQUIPPED WITH INTEGRAL FALL PROTECTION. CONTRACTOR SHALL COORDINATE INSTALLATION WITH WETWELL COATING AND ENSURE PROPER INSTALLATION.
3. TOP OF HATCH SHALL BE 1/4" DIAMOND PLATE.
4. WETWELL ACCESS HATCH AND CONCRETE TOP SHALL BE RATED FOR PEDESTRIAN LOADING.
5. HATCH SHALL BE EJ PRODUCT NUMBER H366011191, OR APPROVED EQUAL.
6. HATCH SHALL BE EQUIPPED WITH HYDRAULIC LIFT SPRINGS TO ASSIST WITH OPENING.
7. HATCH SHALL HAVE A SLAM LOCK.
8. ALL HARDWARE AND HINGES SHALL BE SS.

WETWELL HATCH DETAIL 1/C12
SCALE: 1/2" = 1'

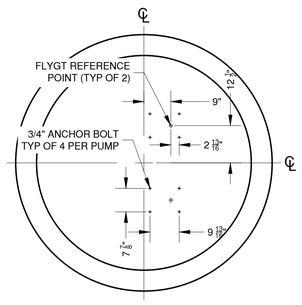

PUMP MOUNTING DETAIL 2/C12
SCALE: 1/2" = 1'

GRAND OTIS PUMP NOTES:
THE TWO EXISTING FLYGT NP 3127 HT DRYWELL PUMPS SHALL BE REMOVED AND REUSED IN THE NEW WETWELL. SEE SPECIFICATION SECTION 11312 FOR PUMP CONVERSION REQUIREMENTS.

VALVE VAULT HATCH NOTES:
1. VALVE VAULT SHALL HAVE 4'X6' INTERIOR DIMENSIONS.
2. HATCH SHALL BE EJ PRODUCT NUMBER H48781996 W/ A 4'X6' CLEAR OPENING, OR APPROVED EQUAL.
3. VALVE VAULT TOP SLAB SHALL BE OVERSIZED AS NECESSARY FOR HATCH.
4. VALVE VAULT ACCESS HATCH AND CONCRETE TOP SHALL BE H20 RATED.
5. ACCESS HATCH SHALL BE EQUIPPED WITH INTEGRAL FALL PROTECTION.
6. TOP OF HATCH SHALL BE 1/4" DIAMOND PLATE.
7. HATCH SHALL BE EQUIPPED WITH HYDRAULIC LIFT SPRINGS TO ASSIST WITH OPENING.
8. HATCH SHALL HAVE A RECESSED PADLOCK CLIP FOR LOCKING.
9. ALL HARDWARE AND HINGES SHALL BE SS.

EXISTING WET WELL, HATCH NOTES:
1. REMOVE (E) HATCH AND INSTALL (N) HATCH. (N) HATCH SHALL BE EJ MODEL H3636SS01 OR APPROVED EQUAL. FASTEN FLANGE TO (E) CONCRETE W/ 8-3/8"X3" KWIK BOLT TZ SS 316 OR APPROVED EQUAL.

SHEET NOTES:
1. WALL THICKNESS OF NEW WET WELL SHALL BE 8-INCHES OR LESS IN ORDER TO ADEQUATELY FIT WITHIN THE EXISTING STRUCTURE. CONTRACTOR SHALL CONFIRM EXACT THICKNESS REQUIREMENTS PRIOR TO ORDERING PRECAST STRUCTURE, SEE SECTION 01140-1.15.
2. INSTALL GROUT UNDER BASE ELBOW. ANCHOR GROUT TO VAULT W/ 4 #5 BARS, DRILLED AND EPOXIED 3" INTO CONCRETE FLOOR. PROVIDE 2" MIN. CLEARANCE BETWEEN REBAR AND EDGE OF GROUT.

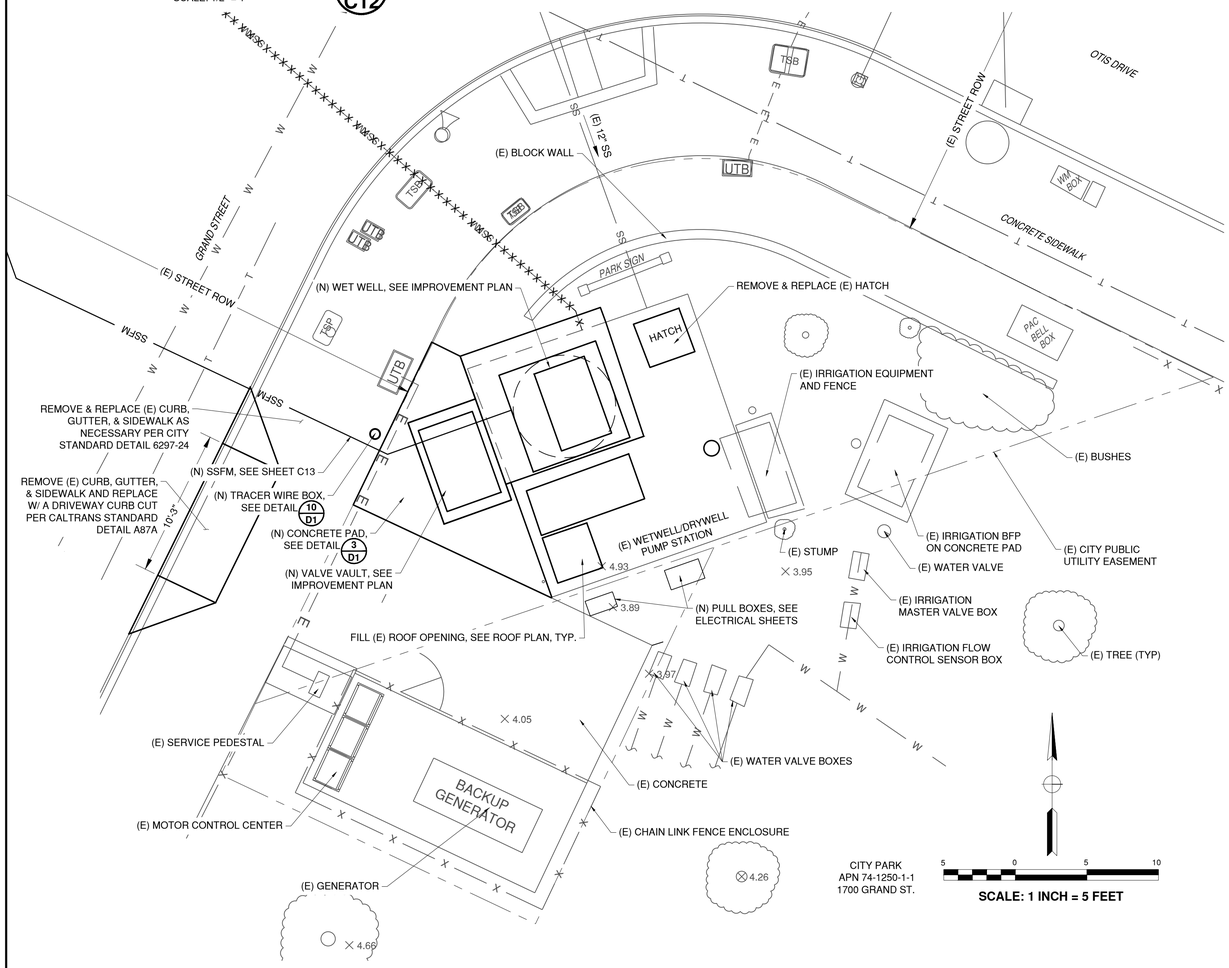

GRAND-OTIS SITE IMPROVEMENT PLAN
SCALE: 1" = 5'

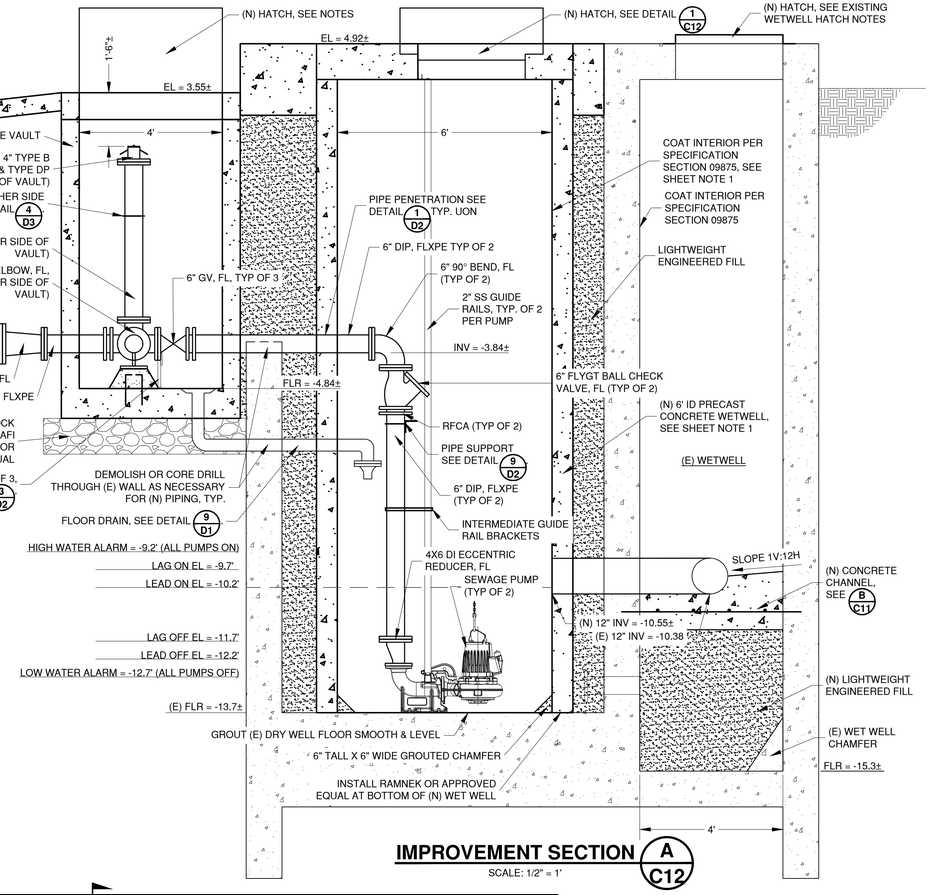

IMPROVEMENT SECTION A/C12
SCALE: 1/2" = 1'

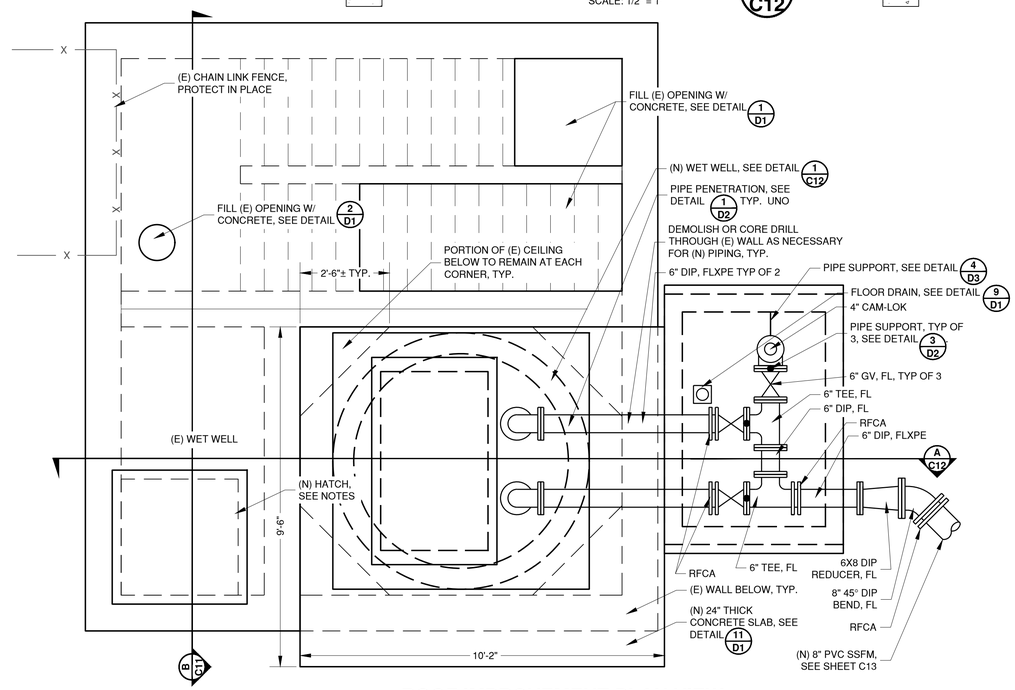

ROOF IMPROVEMENT PLAN VIEW
SCALE: 1/2" = 1'

NO	REVISIONS	DATE	APPR
1			
2			
3			
4			
5			
6			

Schaaf & Wheeler
CONSULTING CIVIL ENGINEERS
1171 HOMESTEAD RD, STE. 255
SANTA CLARA, CA 95050
(408) 246-4848

CITY OF ALAMEDA
GROUP 4 - SEWERAGE PUMP STATION RENOVATIONS FOR RELIABILITY AND SAFETY IMPROVEMENTS
GRAND-OTIS IMPROVEMENT PLAN & SECTION

DATE:	11/27/19	DESIGN:	CLP
SCALE:	AS SHOWN	DRAWN:	CLP
		CHECKED:	BLS

DWG 9425 CASE 35

C12

32 OF 70

#22 GRAND OTIS PUMP STATION

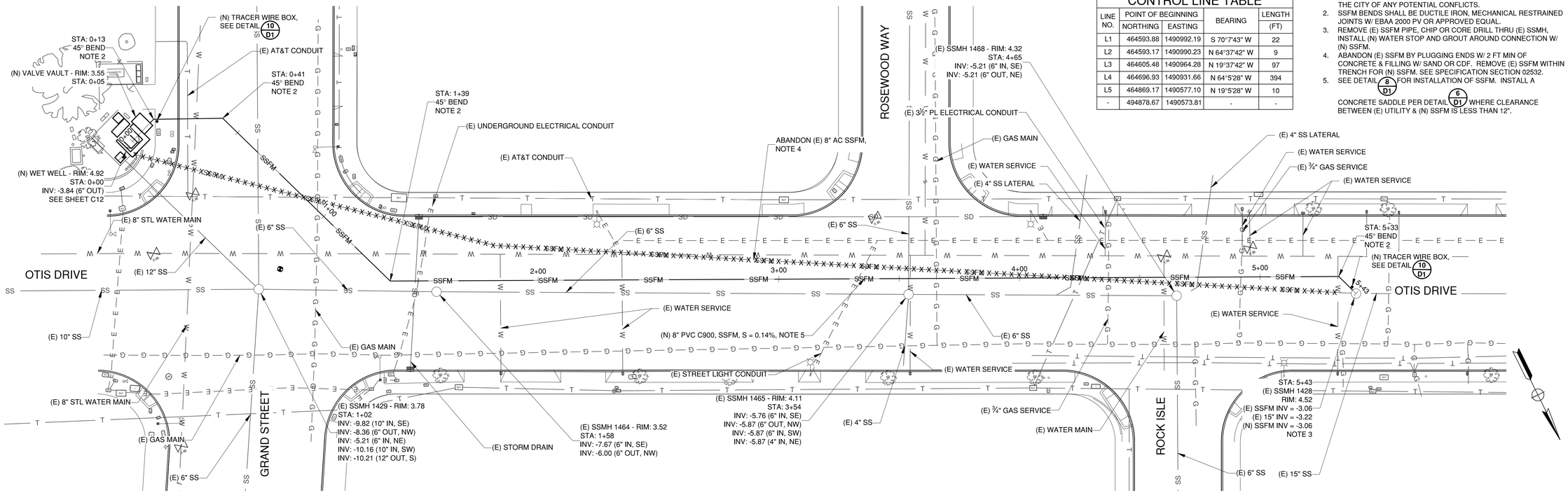

GRAND-OTIS FORCE MAIN PLAN

SCALE: 1" = 20'

SCALE: 1 INCH = 20 FEET

FORCE MAIN STATION LINE CONTROL LINE TABLE

LINE NO.	POINT OF BEGINNING		BEARING	LENGTH
	NORTHING	EASTING		(FT)
L1	464593.88	1490992.19	S 70°7'43" W	22
L2	464593.17	1490990.23	N 64°37'42" W	9
L3	464605.48	1490964.28	N 19°37'42" W	97
L4	464696.93	1490931.66	N 64°5'28" W	394
L5	464869.17	1490577.10	N 19°5'28" W	10
-	494878.67	1490573.81	-	-

NOTES:

1. ELEVATION OF (E) UTILITY IS UNKNOWN, CONTRACTOR SHALL SUBMIT ALL POTHOLE INFORMATION TO THE CITY AND NOTIFY THE CITY OF ANY POTENTIAL CONFLICTS.
2. SSFM BENDS SHALL BE DUCTILE IRON, MECHANICAL RESTRAINED JOINTS W/ EBAA 2000 PV OR APPROVED EQUAL.
3. REMOVE (E) SSFM PIPE, CHIP OR CORE DRILL THRU (E) SSMH, INSTALL (N) WATER STOP AND GROUT AROUND CONNECTION W/ (N) SSFM.
4. ABANDON (E) SSFM BY PLUGGING ENDS W/ 2 FT MIN OF CONCRETE & FILLING W/ SAND OR CDF. REMOVE (E) SSFM WITHIN TRENCH FOR (N) SSFM. SEE SPECIFICATION SECTION 02532.
5. SEE DETAIL 8/D1 FOR INSTALLATION OF SSFM. INSTALL A CONCRETE SADDLE PER DETAIL 6/D1 WHERE CLEARANCE BETWEEN (E) UTILITY & (N) SSFM IS LESS THAN 12".

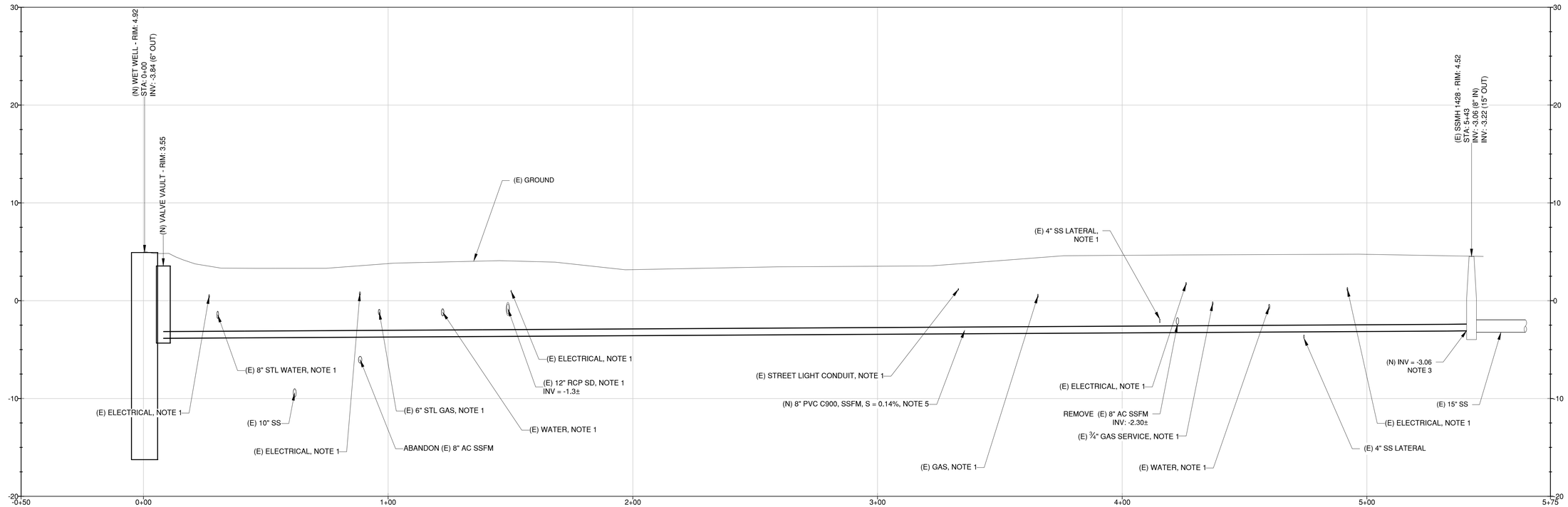

FORCE MAIN PROFILE

HORIZONTAL SCALE: 1" = 20'
VERTICAL SCALE: 1" = 5'

NO	REVISIONS	DATE	APPR
1			
2			
3			
4			
5			
6			

PROFESSIONAL ENGINEER — CHRISTOPHER L. PHILLIPS — No. 56307 — CIVIL — STATE OF CALIFORNIA

Schaaf & Wheeler
CONSULTING CIVIL ENGINEERS
1171 HOMESTEAD RD, STE. 255
SANTA CLARA, CA 95050
(408) 246-4848

CITY OF ALAMEDA
GROUP 4 - SEWERAGE PUMP STATION RENOVATIONS FOR RELIABILITY AND SAFETY IMPROVEMENTS
GRAND-OTIS FORCE MAIN

DATE:	11/27/19
SCALE:	AS SHOWN
DESIGN:	CLP
DRAWN:	CLP
CHECKED:	BLS

DWG 9425 CASE 35

C13

33 OF 70

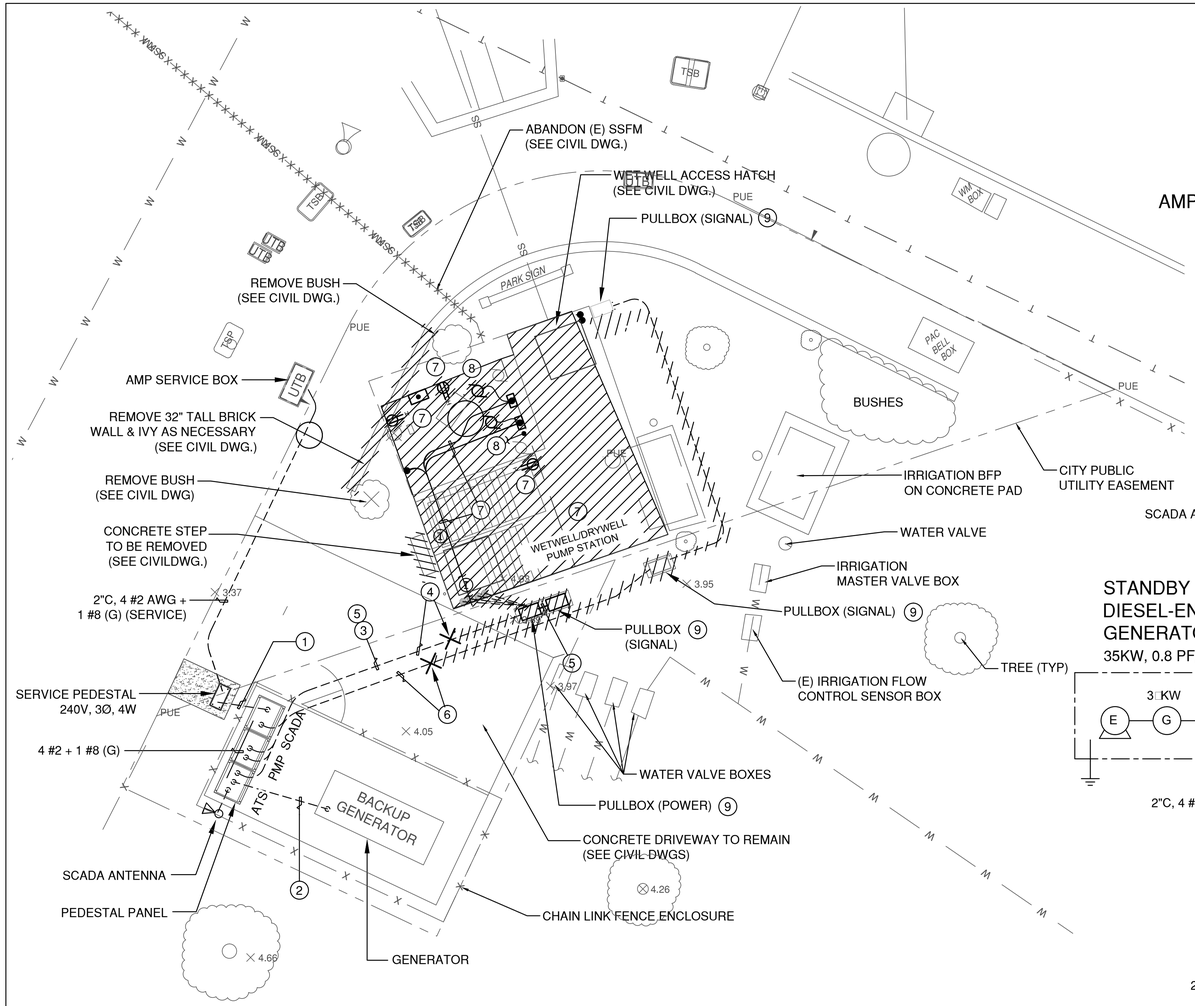

DETAIL 2 NOTES:

1. 2"C, 4 #2 AWG + 1 #8 (G) (SERVICE, 240V)
   3/4"C, 2 #14 AWG (SERVICE PEDESTAL INTRUSION ALARM)
2. 2"C, 4 #2 AWG + 1 #8 (G) (EMERGENCY POWER)
   3/4"C, 2 #12 AWG (BATT. CHARGER)
   2 #12 AWG (GEN. JWH)
   3/4"C, 2 #14 (GEN. START SIGNAL)
   2 #14 (GEN. ALARM)
3. 1"C, (LIGHTS, RECEPTS, SUMP PUMP) TO BE REMOVED.
4. (2) 1"C, (PUMP P1 AND P2 POWER AND MONITORING) TO REMAIN FOR RE-USE IN THE NEW CONSTRUCTION. REMOVE ALL CONDUCTORS. SEE DWG. E20 FOR NEW WORK REQUIREMENTS.
5. 1"C, 6 #14 (DRYWELL SIGNAL) TO BE REMOVED.
6. 1"C, (PRESSURE TRANSMITTER)
   1"C, (FLOAT SWITCHES)
   TO REMAIN. REMOVE ALL PRESSURE TRANSMITTER AND FLOAT SWITCH CABLES ALL THE WAY UP TO THE SOURCE. SEE DWG. E20 FOR NEW WORK REQUIREMENTS.
7. REMOVE ALL CONDUIT, JUNCTION BOXES. WIRING AND DEVICES INCLUDING INTRUSION DETECTORS, LIGHTS, RECEPTACLES, CONTROLS, LEVEL PRESSURE TRANSMITTER ,AND FLOAT SWITCHES THAT MAY EXIST IN DRY AND WET WELL. SEAL OFF ALL OPENINGS BETWEEN DRY WELL AND WET WELL AND OPENINGS TO EXTERIOR OF WET WELL.
8. DISCONNECT AND REMOVE PUMP. RETAIN FOR RE-USE IN THE NEW CONSTRUCTION. SEE DWG. E20 FOR NEW WORK INSTALLATION.
9. REMOVE ELECTRICAL EQUIPMENT.

2 — GRAND OTIS SITE PLAN
SCALE: 1" = 5'-0"

0 5' 10' 15'
SCALE: 1" = 5'-0"

GENERAL NOTES:

1. NOT ALL DEVICES OR CONDUIT OR OPENING TO THE EXTERIOR ARE NECCESSARY SHOWN. IT IS THE INTENTION OF THIS PROJECT TO LEAVE THE EXISTING WELLS COMPLETELY CLEAR AND FREE OF ANY AND ALL EXISTING ELECTRICAL APPARATUS THAT IS NOT IN USE OR THAT IS BEING REPLACED BY THIS PROJECT. THIS INCLUDES DEVICES, CONDUIT, BOXES, IN GROUND BOXES SERVING THE WELL BUT LOCATED OUTSIDE THE WELL, AND ANY OTHER SYSTEMS THAT EXIST BUT WILL NOT BE USED OR REPLACED AT THE COMPLETION OF THIS PROJECT WHETHER SHOWN SPECIFICALLY ON THESE PLANS FOR REMOVAL OR NOT.
2. CITY RESERVES THE RIGHT OF REFUSAL ON ANY OF THE EXISTING EQUIPMENT AND DEVICES BEING REMOVED IN THIS PROJECT. ANY EQUIPMENT OR DEVICES NOT WANTED BY THE CITY SHALL BECOME THE PROPERTY OF THE CONTRACTOR AND SHALL BE REMOVED FROM THE PROJECT SITE.

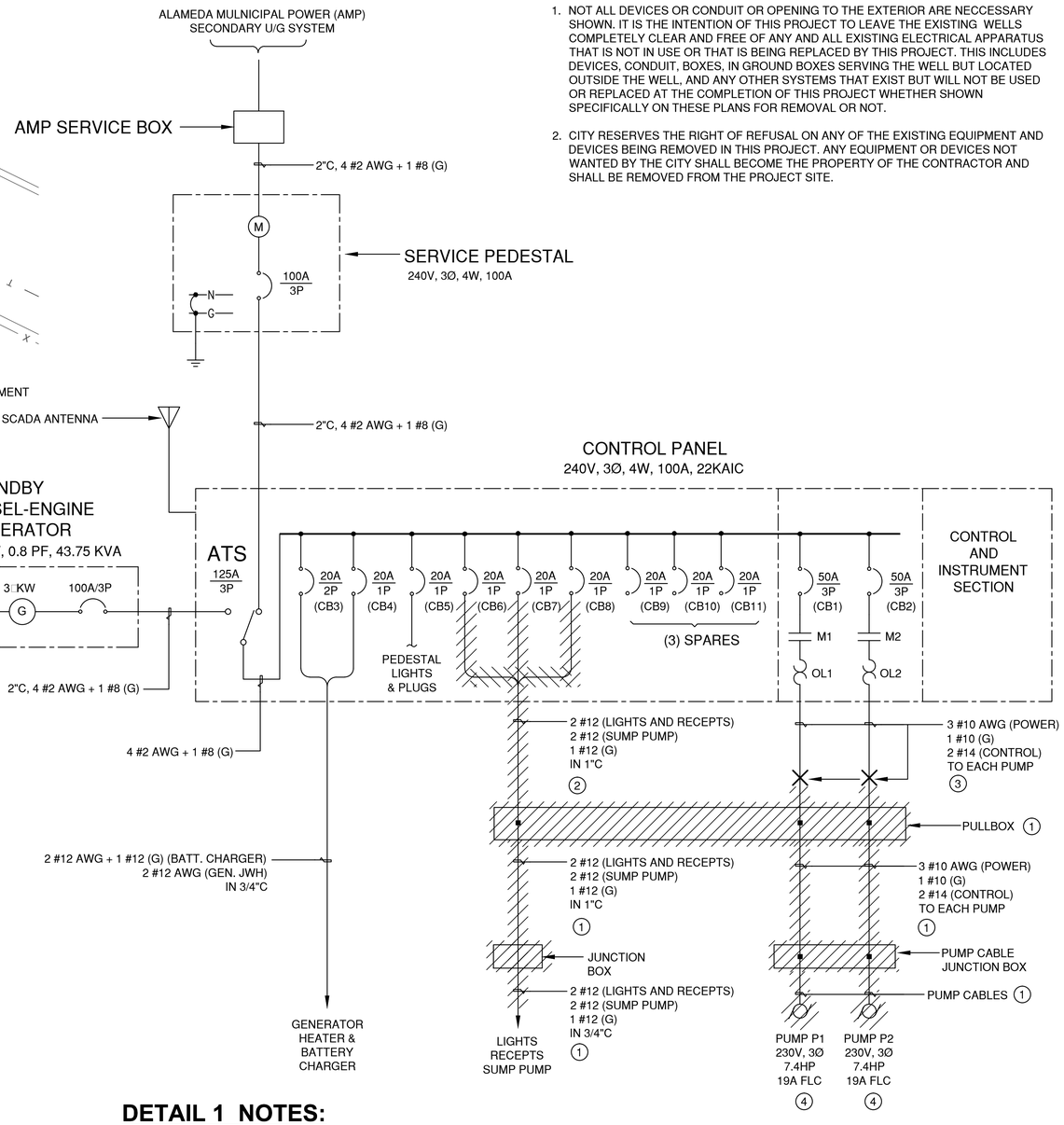

DETAIL 1 NOTES:

1. REMOVE ALL CONDUIT, PUMP CABLES, JUNCTION BOXES. WIRING AND DEVICES INCLUDING INTRUSION DETECTORS, LIGHTS, RECEPTACLES, CONTROLS, LEVEL PRESSURE TRANSMITTER , AND FLOAT SWITCHES THAT MAY EXIST IN DRYWELL AND WET WELL.
2. 1"C, (LIGHTS, RECEPTS, SUMP PUMP) TO BE REMOVED.
3. (2) 1"C, (PUMPS P1 AND P2 POWER AND MONITORING) TO REMAIN FOR RE-USE IN THE NEW CONSTRUCTION. REMOVE ALL CABLES AND WIRES. SEE DWG. E20 FOR NEW WORK REQUIREMENTS.
4. DISCONNECT AND REMOVE PUMP. RETAIN FOR RE-USE IN THE NEW CONSTRUCTION. SEE DWG. E20 FOR NEW WORK.

1 — GRAND OTIS ONE-LINE DIAGRAM
SCHEMATIC

NO	REVISIONS	DATE	APPR
1			
2			
3			
4			
5			
6			
7			

REGISTERED PROFESSIONAL ENGINEER
C. HERBOCIA
No. 9580
9/30/20
ELECTRICAL
STATE OF CALIFORNIA

engineers, inc.
3350 scott blvd., bldg. 11
santa clara, ca. 95054
(408) 986-8558
FAX (408) 986-9627
PROJECT NO. 18697-06

CITY OF ALAMEDA
GROUP 4 - SEWERAGE PUMP STATION RENOVATIONS
FOR RELIABILITY AND SAFETY IMPROVEMENTS
GRAND OTIS PUMP STATION
ONE-LINE & SITE PLAN - REMOVAL WORK

DATE:	SCALE:	DESIGN:	DRAWN:	CHECKED:
11/27/19	AS SHOWN	JCM	VDM	JOH

DWG 9425 CASE 35

E19

34 OF 70

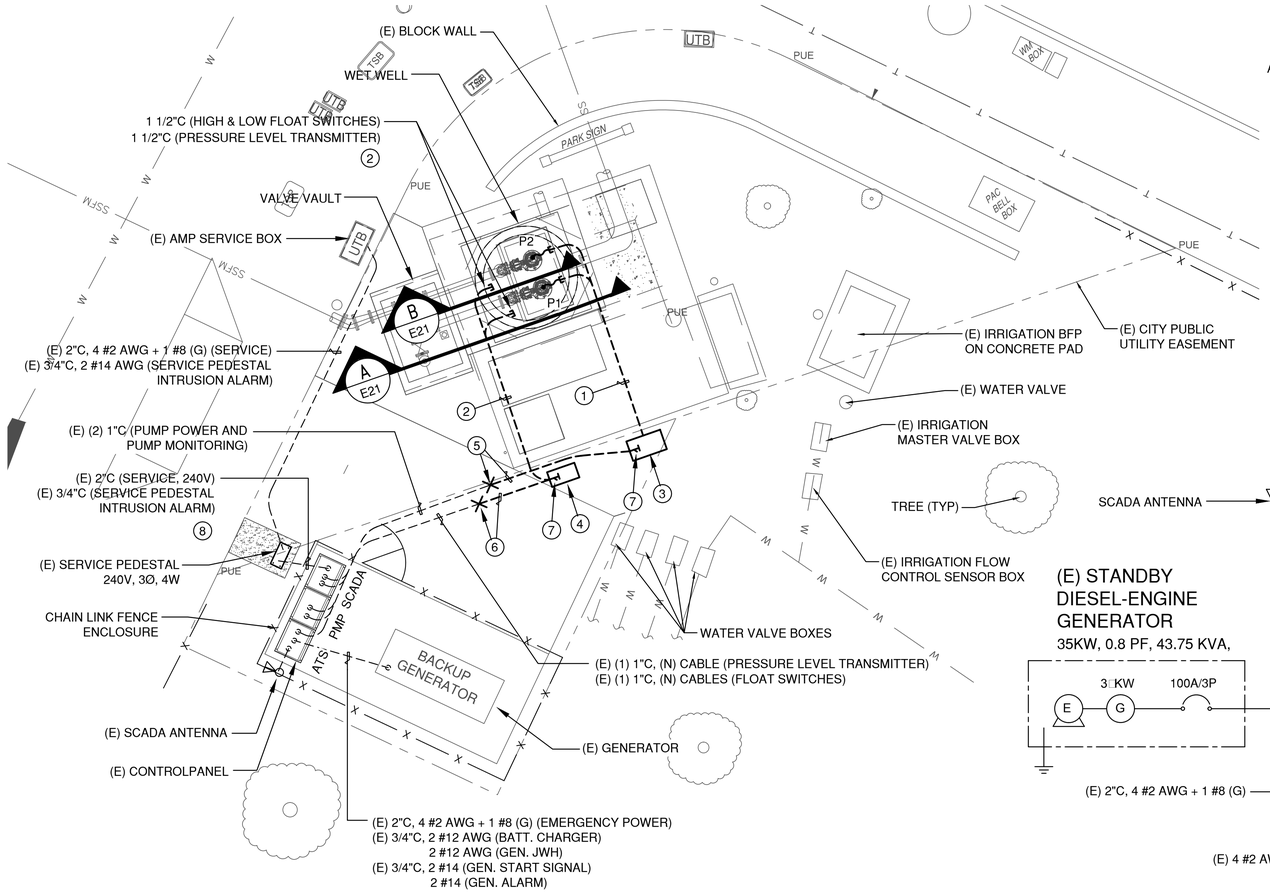

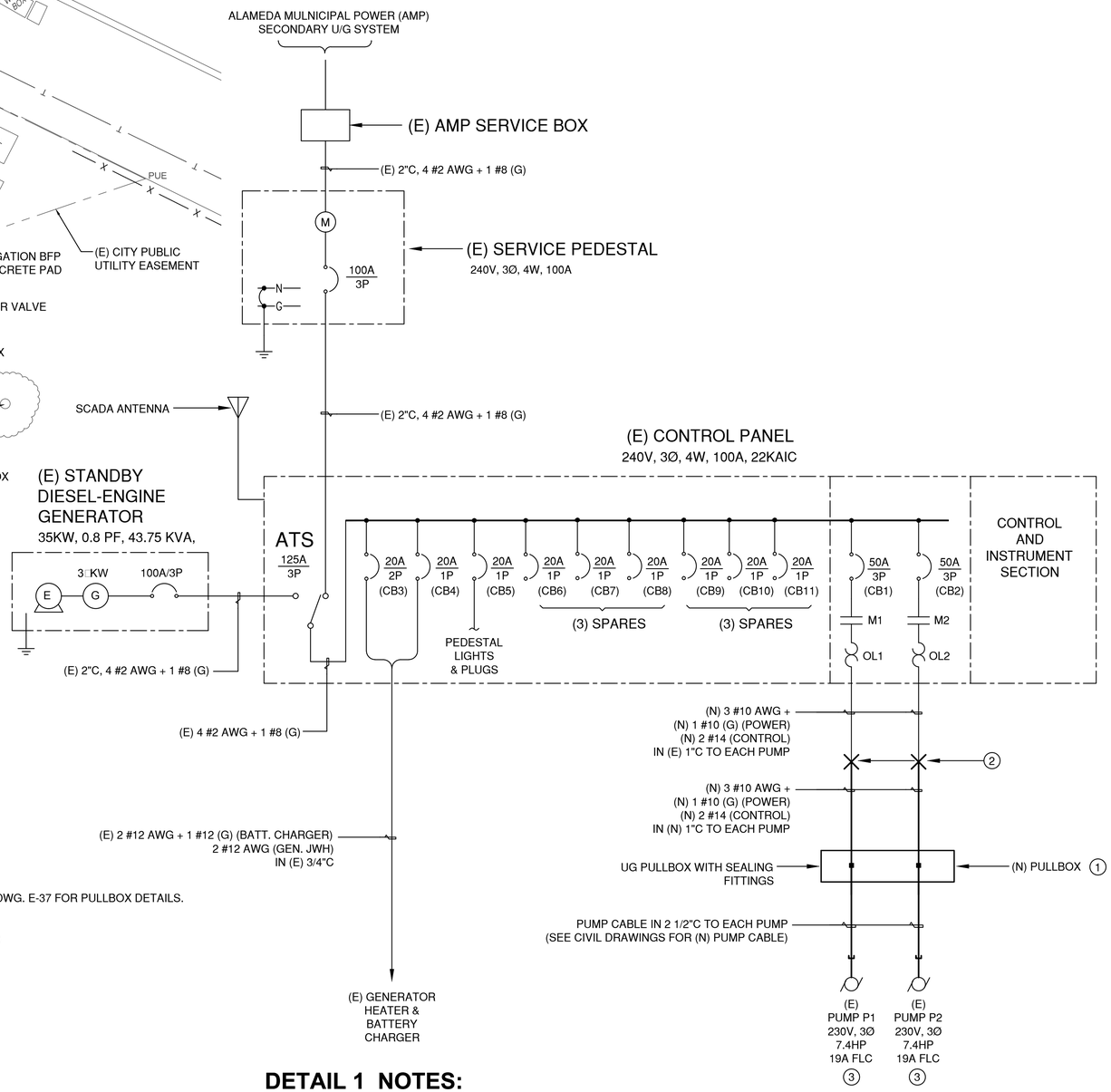

DETAIL 2 NOTES:

1. PROVIDE (2) 2 1/2" PVC COATED RSC CONDUIT FOR PUMP POWER CABLING.
2. PROVIDE (1) 1 1/2" PVC COATED RSC CONDUIT FOR LEVEL TRANSMITTER CABLE.
   PROVIDE (1) 1 1/2" PVC COATED RSC CONDUIT FOR HIGH AND LOW LEVEL FLOAT CABLES.
3. PROVIDE IN GROUND PULL BOX FOR PUMP POWER AND MONITORING CONTROL CIRCUITS, SIZE 6T, CHRISTY B1730 WITH 12" EXTENSION (17" x 30") REINFORCED TRAFFIC RATED CONCRETE BOX WITH BOLT DOWN, STEEL CHECKER PLATED COVER.
4. PROVIDE IN GROUND PULL BOX FOR CONTROLS, SIZE 5T, CHRISTY B1324 WITH 12" EXTENSION (13" x 24") REINFORCED TRAFFIC RATED CONCRETE BOX WITH BOLT DOWN, STEEL CHECKER PLATED COVER.
5. INTERCEPT AND EXTEND
   (2) (E) 1"C FOR PUMP POWER, MOISTURE AND TEMPERATURE MONITORING CONTROL CIRCUITS TO PUMP POWER PULLBOX FOR WET WELL PUMPS. CONTRACTOR TO MATCH EXISTING CONDUIT MATERIAL.SEE ONE-LINE DIAGRAM FOR CABLE SIZES.
6. EXTEND
   (1) (E) 1"C FOR PRESSURE LEVEL TRANSMITTER CABLE.
   (1) (E) 1"C FOR HIGH AND LOW FLOAT CABLES TO THE PUMP CONTROL.
   PULLBOX. CONTRACTOR TO MATCH EXISTING CONDUIT MATERIAL.
   SEE ONE-LINE DIAGRAM FOR CABLE SIZES.
   PROVIDE CLASS I, DIV. 1 SEALING FITTING FOR ALL CONDUITS LEAVING THIS PULLBOX
7. TOWARDS THE MOTOR CONTROL CENTER (MCC). SEE DWG. E-37 FOR PULLBOX DETAILS.
8. (E) 2"C, 4 #2 AWG + 1 #8 (G) (SERVICE, 240V)
   (E) 3/4"C, 2 #14 (SERVICE PEDESTAL INTRUSION ALARM)

DETAIL 1 NOTES:

1. PROVIDE IN GROUND PULL BOX FOR PUMP POWER AND MONITORING CONTROL CIRCUITS, SIZE 6T, CHRISTY B1730 WITH 12" EXTENSION (17" x 30") REINFORCED TRAFFIC RATED CONCRETE BOX WITH BOLT DOWN, STEEL CHECKER PLATED COVER.
2. INTERCEPT AND EXTEND TO POWER PULLBOX
   (2) 1"C FOR PUMP POWER, MOISTURE AND TEMPERATURE MONITORING CONTROL CIRCUITS TO PUMP POWER PULLBOX FOR WET WELL PUMPS. CONTRACTOR TO MATCH EXISTING CONDUIT MATERIAL. SEE ONE-LINE DIAGRAM FOR CABLE SIZES.
3. EXISTING PUMP TO BE INSTALLED IN (N) WET WELL

2 — GRAND OTIS SITE PLAN
SCALE: 1" = 5'-0"

0 5' 10' 15'
SCALE: 1" = 5'-0"

1 — GRAND OTIS ONE-LINE DIAGRAM
SCHEMATIC

NO	REVISIONS	DATE	APPR
1			
2			
3			
4			
5			
6			
7			
8			

REGISTERED PROFESSIONAL ENGINEER — JULIO C. HERBOCIA — No. 9580 — Exp. 9/30/20 — ELECTRICAL — STATE OF CALIFORNIA

engineers, inc.
3350 scott blvd., bldg. 11
santa clara, ca. 95054
(408) 986-8558
FAX (408) 986-9627
PROJECT NO. 18697-06

CITY OF ALAMEDA
GROUP 4 - SEWERAGE PUMP STATION RENOVATIONS FOR RELIABILITY AND SAFETY IMPROVEMENTS
GRAND OTIS PUMP STATION
ONE-LINE & SITE PLAN - NEW WORK

DATE:	SCALE:	DESIGN:	DRAWN:	CHECKED:
11/27/19	AS SHOWN	JCM	VDM	JOH

DWG 9425 CASE 35

E20

35 OF 70

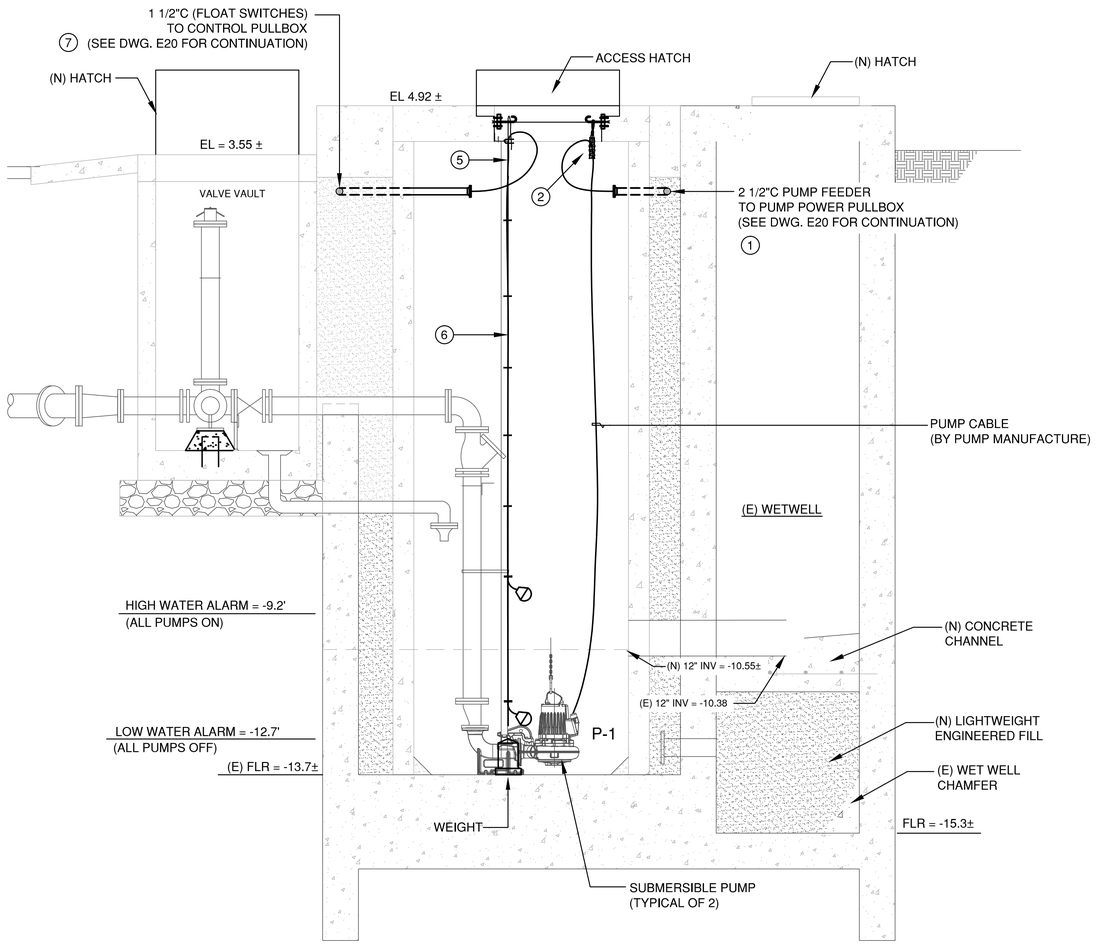

A — WET WELL ELEVATION

SCALE: 1/2" = 1'-0"

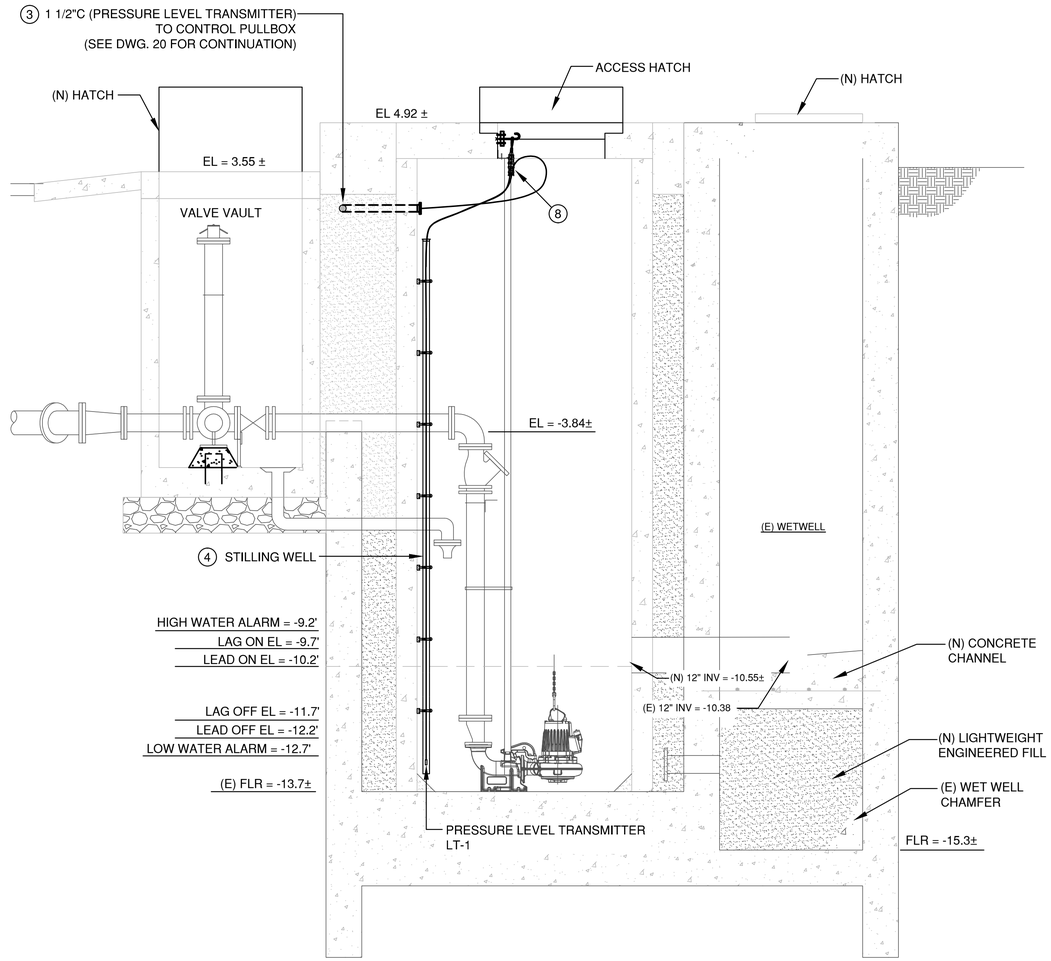

B — WET WELL ELEVATION

SCALE: 1/2" = 1'-0"

SHEET NOTES:

1. (1) 2 1/2"C (PUMP FEEDER CABLE).
INSTALL INSULATED BUSHING AT WET WELL END AND INSULATED GROUNDING BUSHING AT THE POWER PULLBOX. DUCT SEAL BOTH ENDS AFTER CABLE INSTALLATION.
2. STAINLESS STEEL HOOK, STAINLESS STEEL CHANNEL, STAINLESS STEEL ANCHOR BOLTS, AND STAINLESS STEEL CABLE GRIP.
3. (1) 1 1/2"C (PRESSURE LEVEL TRANSMITTER LT-1).
INSTALL INSULATED BUSHING AT WET WELL END AND INSULATED GROUNDING BUSHING AT THE CONTROL PULLBOX. DUCT SEAL BOTH END AFTER CABLE INSTALLATION
4. PRESSURE LEVEL TRANSMITTER INSIDE STILLING WELL.
SEE CIVIL DWG. D2, DETAIL 8. ADJUST CHAMFER PER CIVIL DRAWINGS.
5. STAINLESS STEEL HOOK, STAINLESS STEEL CHANNEL, STAINLESS STEEL ACHOR BOLT, STAINLESS STEEL THIMBLE, STAINLESS STEEL CABLE CLAMPS, AND PVC COATED 15-POUND WEIGHT.
6. 1/4" DIA. STAINLESS STEEL CABLE WITH FLOAT SWITCH CABLE. TIE WRAP WITH HEAVY PLASTIC TIE AT EVERY 2 FT.
7. (1) 1 1/2"C (FLOAT SWITCHES).
INSTALL INSULATED BUSHING AT WET WELL END AND INSULATED GROUNDING BUSHING AT THE CONTROL PULLBOX. DUCT SEAL BOTH END AFTER CABLE INSTALLATION.
8. STAINLESS STEEL HOOK, STAINLESS STEEL CHANNEL, STAINLESS STEEL ANCHOR BOLTS, AND CABLE HANGER.

NO	DATE	APPR	REVISIONS
1			
2			
3			
4			
5			
6			
7			

engineers, inc.
3350 scott blvd., bldg. 11
santa clara, ca. 95054
(408) 986-8558
FAX (408) 986-9627
PROJECT NO. 18697-06

CITY OF ALAMEDA
GROUP 4 - SEWERAGE PUMP STATION RENOVATIONS
FOR RELIABILITY AND SAFETY IMPROVEMENTS
GRAND OTIS PUMP STATION
WET WELL ELEVATIONS

DATE:	11/27/19
SCALE:	AS SHOWN
DESIGN:	JCH
DRAWN:	VDM
CHECKED:	JCH

DWG 9425 CASE 35

E21

36 OF 70

File: M:\18697-06 Alameda Pumps - Group 4\35_GRO_E21.dwg, 11/27/2019 3:14 PM, Last saved: Vuong, PlotDate: 11/27/2019 3:43 PM By: Vuong Mai, Plot scale: 1:2.5849, Plot Size: ANSI A (8.50 x 11.00 Inches)
Xrefs: Group3_Wet Details SHEET_SAW_Group-4 SHEET_07_08 GRAND-OTIS_072419

#16 PARK OTIS PUMP STATION

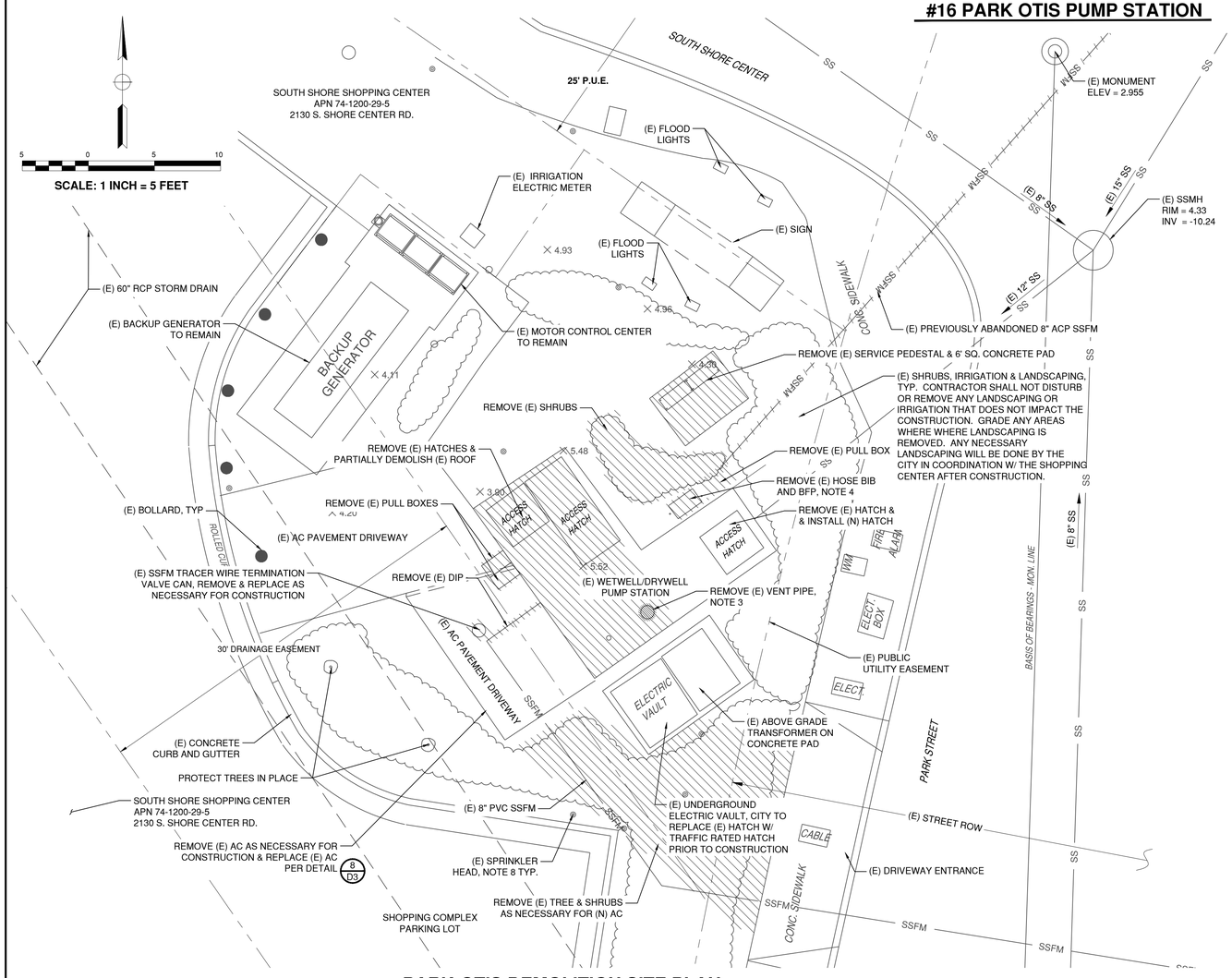

PARK-OTIS DEMOLITION SITE PLAN

SCALE: 1" = 5'

PARK-OTIS BASIS OF BEARINGS

HELD MONUMENT LINE BEARING N 01° 52' 42" E AS SHOWN ON TRACT 1866 SHEET 9 OF 9. HELD COORDINATE VALUE FOR MONUMENT (500/4500) AS N462338.30 E1494676.61

PARK-OTIS BENCHMARKS

HELD SSMH 717 RIM AS SHOWN ON SYSTEM MAP ELEV. = 4.34

NOTES:

1. CONTRACTOR TO REMOVE ALL ELECTRICAL EQUIPMENT FROM DRYWELL INCLUDING, BUT NOT LIMITED TO, ELECTRICAL PANELS, CONDUITS, LIGHTS, AND SWITCHES. FOR DETAILED ELECTRICAL DEMOLITION REQUIREMENTS, REFER TO ELECTRICAL SHEETS.
2. CONTRACTOR SHALL REMOVE EXISTING PUMPS, PADS, SUCTION PIPING AND DISCHARGE PIPING AS SHOWN ON THE DRAWINGS AND AS NECESSARY TO FACILITATE THE IMPROVEMENTS DETAILED HEREIN.
3. EXISTING VENT IS 14"Ø AND EXTENDS APPROXIMATELY 11'-6" ABOVE TOP OF WETWELL.
4. REMOVE EXISTING WATER SERVICE WITHIN LIMITS OF EXCAVATION AND CAP ENDS. COORDINATE WITH EAST BAY MUNICIPAL DISTRICT (EBMUD) & THE CITY TO ABANDON THE WATER SERVICE, SEE SPECIFICATION SECTION 02532-3.02.C FOR ADDITIONAL REQUIREMENTS.
5. CONTRACTOR SHALL PROVIDE CONTINUOUS PUMPING CAPACITY FROM THE TIME WHEN THE EXISTING STATION IS TAKEN OFFLINE UNTIL THE IMPROVEMENTS HAVE BEEN ACCEPTED BY THE CITY.
6. PWWF INTO THE PUMP STATION ARE ESTIMATED TO BE 889 GPM.
7. BYPASS PUMPING SHALL BE ACHIEVED BY CREATING A TEMPORARY CONNECTION TO THE (E) SSFM. ALL FORCE MAIN CONNECTIONS SHALL BE RESTRAINED AGAINST THRUST.
8. CONTRACTOR SHALL ENSURE EXISTING IRRIGATION IS MAINTAINED FOR ALL LANDSCAPING TO REMAIN. MODIFY (E) IRRIGATION AND SPRINKLER HEADS AS NECESSARY TO PROVIDE WATER FOR LANDSCAPING AND TO KEEP WATER OFF OF HARDSCAPED AREAS DURING CONSTRUCTION. CITY WILL COORDINATE W/ THE SHOPPING CENTER TO MAKE FINAL MODIFICATIONS TO THE IRRIGATION SYSTEM AND LANDSCAPING AS NECESSARY.
9. CONTRACTOR SHALL PROVIDE TRAFFIC CONTROL, IN CONFORMANCE WITH THE REQUIREMENTS OF THE CONTRACT DOCUMENTS, WHENEVER PERFORMING WORK WITHIN THE STREET.
10. SEE ELECTRICAL PLANS FOR ADDITIONAL IMPROVEMENTS.
11. THE ADJACENT SHOPPING CENTER PARKING LOT SHALL NOT BE USED BY THE CONTRACTOR AT ANY TIME DURING CONSTRUCTION.
12. (E) STAIRWELL ROOF, WALL, AND STAIRS SHALL NOT BE DEMOLISHED UNTIL THE (E) STRUCTURE HAS BEEN BACKFILLED TO ELEV. -3.0±.

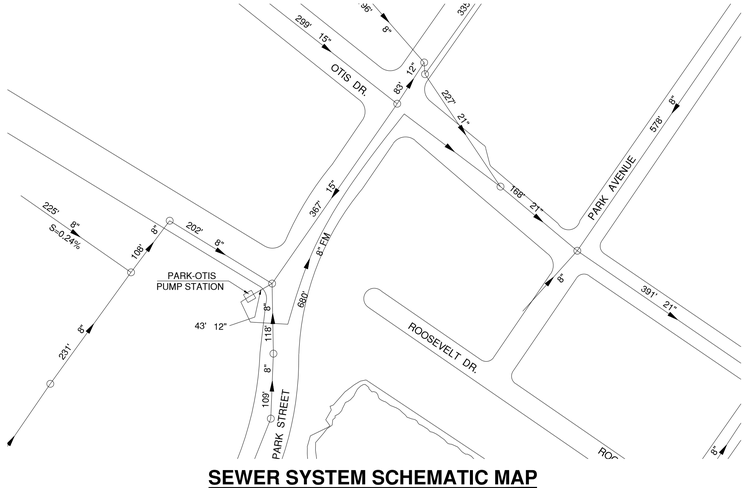

SEWER SYSTEM SCHEMATIC MAP

NO SCALE

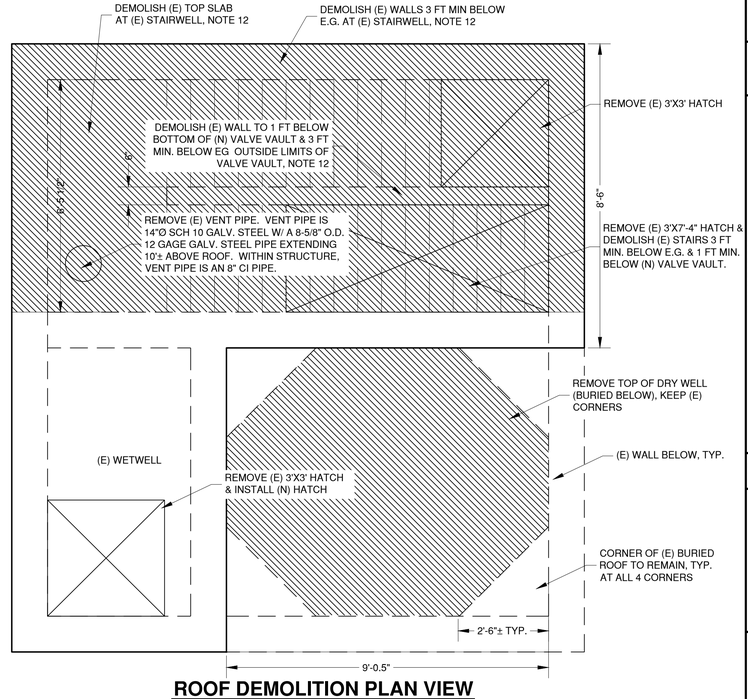

ROOF DEMOLITION PLAN VIEW

SCALE: 1/2" = 1'

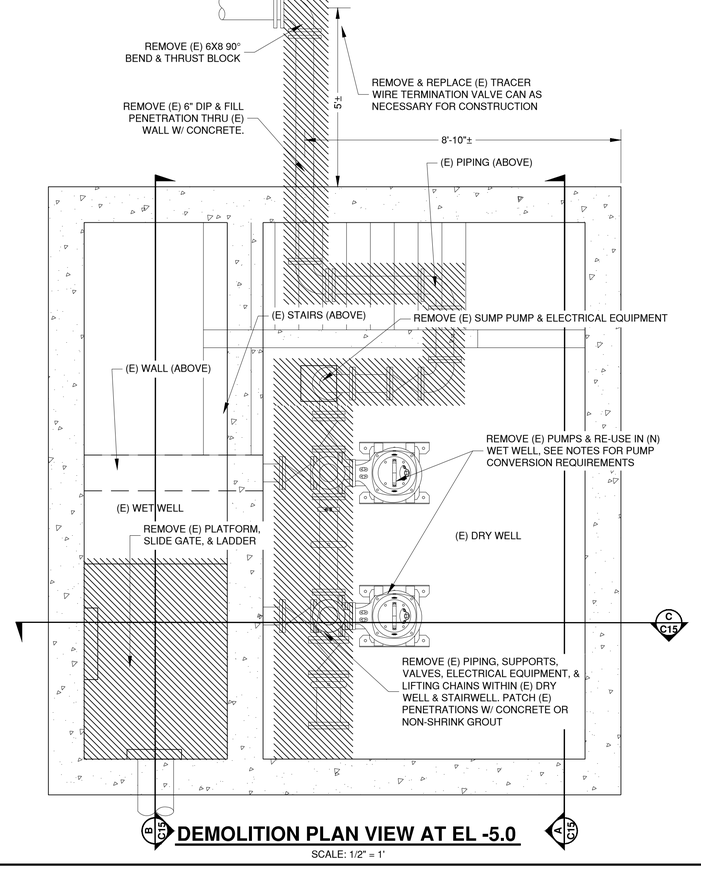

DEMOLITION PLAN VIEW AT EL -5.0

SCALE: 1/2" = 1'

NO	REVISIONS	DATE	APPR
1			
2			
3			
4			
5			
6			

PROFESSIONAL ENGINEER — REGISTERED — CIVIL — STATE OF CALIFORNIA

Schaaf & Wheeler
CONSULTING CIVIL ENGINEERS
1171 HOMESTEAD RD, STE. 255
SANTA CLARA, CA 95050
(408) 246-4848

CITY OF ALAMEDA

GROUP 4 - SEWERAGE PUMP STATION RENOVATIONS FOR RELIABILITY AND SAFETY IMPROVEMENTS

PARK-OTIS DEMOLITION PLAN

DATE:	11/27/19
SCALE:	AS SHOWN
DESIGN:	CLP
DRAWN:	CLP
CHECKED:	BLS

DWG 9425 CASE 35

C14

37 OF 70

#16 PARK OTIS PUMP STATION

SHEET NOTES:

1. CONTRACTOR TO REMOVE ALL ELECTRICAL EQUIPMENT FROM DRYWELL INCLUDING, BUT NOT LIMITED TO, ELECTRICAL PANELS, CONDUITS, LIGHTS, AND SWITCHES. FOR DETAILED ELECTRICAL DEMOLITION REQUIREMENTS, REFER TO ELECTRICAL SHEETS.
2. CONTRACTOR SHALL REMOVE EXISTING PUMPS, PADS, SUCTION PIPING AND DISCHARGE PIPING AS SHOWN ON THE DRAWINGS AND AS NECESSARY TO FACILITATE THE IMPROVEMENTS DETAILED HEREIN.
3. CONTRACTOR SHALL REMOVE ALL VENTILATION EQUIPMENT INCLUDING FANS, DUCTING AND RELATED CONDUIT, ETC. WHERE DUCTING PENETRATES PUMP STATION ROOF, CONTRACTOR SHALL TRIM DUCTING FLUSH WITH THE WALL AND FILL WITH NON-SHRINK GROUT. DO NOT REMOVE VENTILATION ELBOW LOCATED IN THE STAIRWELL.
4. CONTRACTOR SHALL PROVIDE CONTINUOUS PUMPING CAPACITY FROM THE TIME WHEN THE EXISTING STATION IS TAKEN OFFLINE UNTIL THE IMPROVEMENTS HAVE BEEN ACCEPTED BY THE CITY.
5. PWWF INTO THE PUMP STATION ARE ESTIMATED TO BE 889 GPM.
6. BYPASS PUMPING SHALL BE ACHIEVED BY CREATING A TEMPORARY CONNECTION TO THE (E) SSFM. ENSURE THE CONNECTION IS RESTRAINED AGAINST THRUST.
7. CONTRACTOR SHALL MODIFY (E) IRRIGATION AND SPRINKLER HEADS AS NECESSARY TO PROVIDE WATER FOR LANDSCAPING AND TO KEEP WATER OFF OF HARDSCAPED AREAS.
8. CONTRACTOR SHALL PROVIDE TRAFFIC CONTROL, IN CONFORMANCE WITH THE REQUIREMENTS OF THE CONTRACT DOCUMENTS, WHENEVER PERFORMING WORK WITHIN THE STREET.
9. THE ADJACENT SHOPPING CENTER PARKING LOT SHALL NOT BE USED BY THE CONTRACTOR AT ANY TIME DURING CONSTRUCTION.
10. (E) STAIRWELL ROOF, WALL, AND STAIRS SHALL NOT BE DEMOLISHED UNTIL THE (E) STRUCTURE HAS BEEN BACKFILLED TO ELEV. -3.0±.

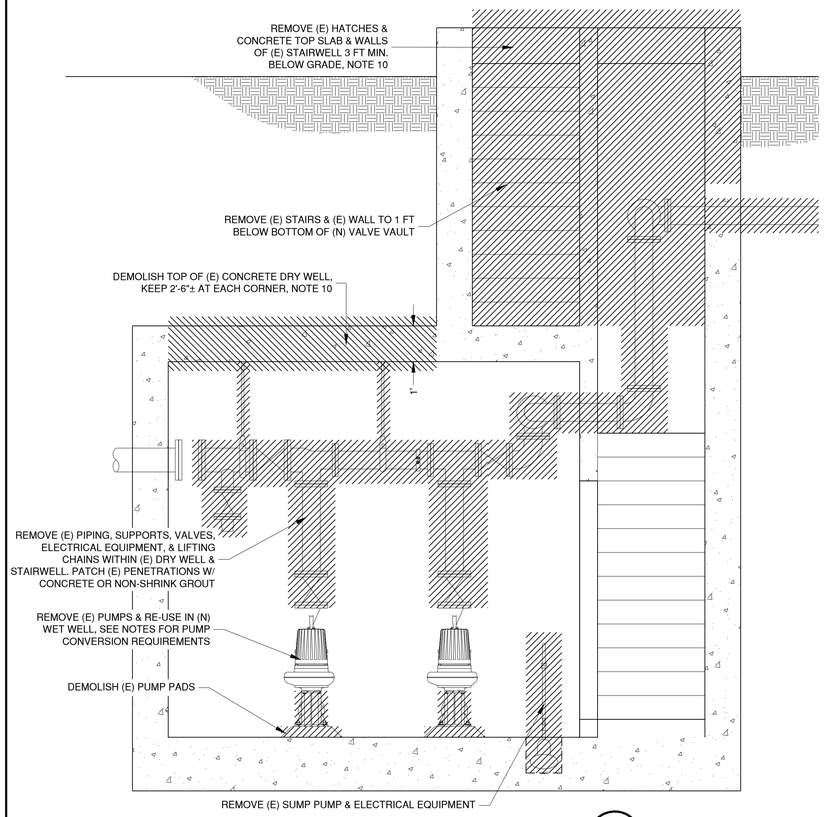

SECTION - DEMOLITION OF (E) DRY WELL A C15

SCALE: 1/2" = 1'

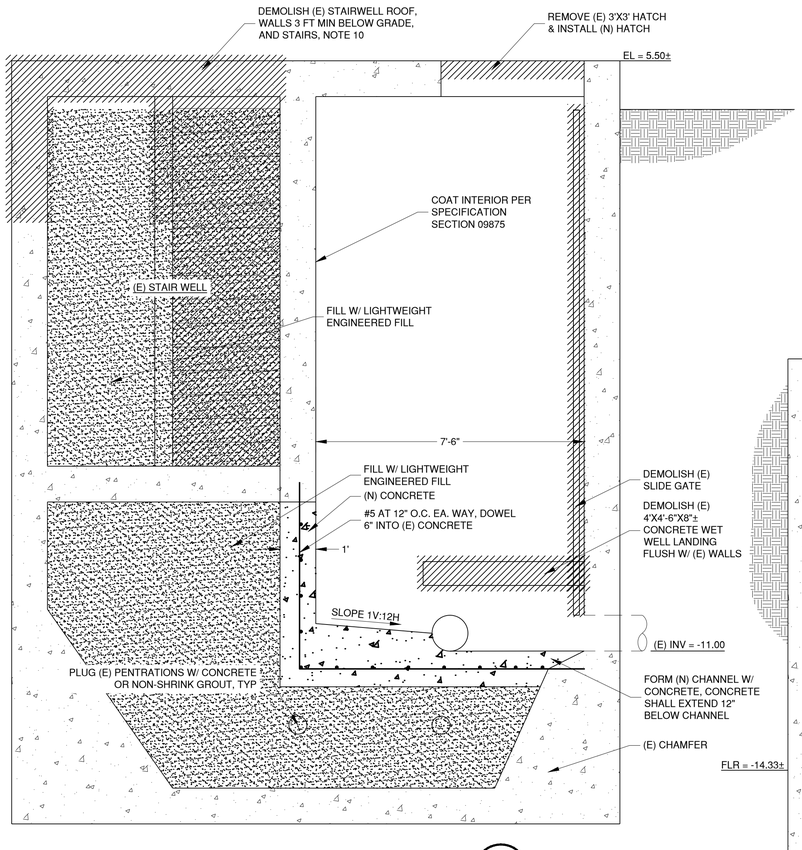

DEMOLITION/IMPROVEMENT SECTION B C15

SCALE: 1/2" = 1'

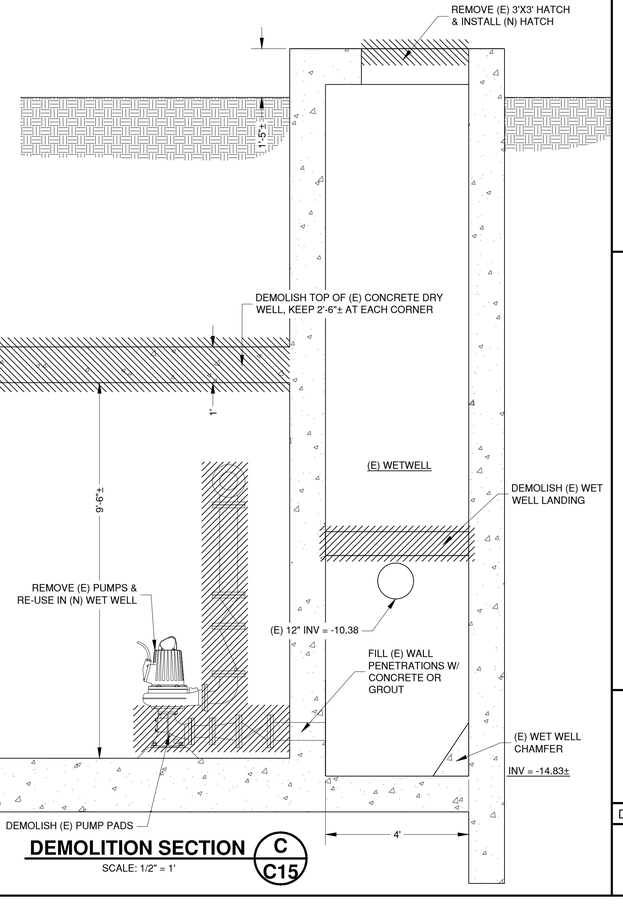

DEMOLITION SECTION C C15

SCALE: 1/2" = 1'

NO	REVISIONS	DATE	APPR
1			
2			
3			
4			
5			
6			
7			

PROFESSIONAL ENGINEER — CHRISTOPHER L. PIONEER — No. 75844 — CIVIL — STATE OF CALIFORNIA

Schaaf & Wheeler
CONSULTING CIVIL ENGINEERS
1171 HOMESTEAD RD. STE. 255
SANTA CLARA, CA 95050
(408) 246-4848

CITY OF ALAMEDA

GROUP 4 - SEWERAGE PUMP STATION RENOVATIONS FOR RELIABILITY AND SAFETY IMPROVEMENTS

PARK-OTIS DEMOLITION SECTIONS

DATE:	11/27/19
SCALE:	AS SHOWN
DESIGN:	CLP
DRAWN:	CLP
CHECKED:	BLS

DWG 9425 CASE 35

C15

38 OF 70

#16 PARK OTIS PUMP STATION

PARK OTIS PUMP NOTES:
THE TWO EXISTING FLYGT NP 3153 HT DRYWELL PUMPS SHALL BE REMOVED AND REUSED IN THE NEW WETWELL. SEE SPECIFICATION SECTION 11312 FOR PUMP CONVERSION REQUIREMENTS.

VALVE VAULT HATCH NOTES:
1. VALVE VAULT SHALL HAVE 4'X5' INTERIOR DIMENSIONS.
2. HATCH SHALL BE EJ PRODUCT NUMBER H42601991, OR APPROVED EQUAL.
3. VALVE VAULT TOP SLAB SHALL BE OVERSIZED AS NECESSARY FOR HATCH.
4. VALVE VAULT ACCESS HATCH AND CONCRETE TOP SHALL BE RATED FOR UNINTENDED H-20 LOADING.
5. ACCESS HATCH SHALL BE EQUIPPED WITH INTEGRAL FALL PROTECTION.
6. TOP OF HATCH SHALL BE 1/4" DIAMOND PLATE.
7. HATCH SHALL BE EQUIPPED WITH HYDRAULIC LIFT SPRINGS TO ASSIST WITH OPENING.
8. HATCH SHALL HAVE A RECESSED PADLOCK CLIP FOR LOCKING.
9. ALL HARDWARE AND HINGES SHALL BE SS.

EXISTING WETWELL, HATCH NOTES:
1. REMOVE (E) HATCH AND INSTALL (N) HATCH. (N) HATCH SHALL BE EJ MODEL H36362501 OR APPROVED EQUAL. FASTEN FLANGE TO (E) CONCRETE W/ 8-3/8"X3" KWIK BOLT TZ SS 316 OR APPROVED EQUAL.

SHEET NOTES:
1. WALL THICKNESS OF NEW WET WELL SHALL BE 8-INCHES OR LESS IN ORDER TO ADEQUATELY FIT WITHIN THE EXISTING STRUCTURE. CONTRACTOR SHALL CONFIRM EXACT THICKNESS REQUIREMENTS PRIOR TO ORDERING PRECAST STRUCTURE, SEE SECTION 01140-1.15.
2. CONTRACTOR SHALL CONFIRM ELEVATION OF (E) SSFM AT CONNECTION LOCATION AND SLOPE (N) PIPING AT A 0.5% MIN. DOWN TO THE (N) WET WELL.
3. INSTALL GROUT UNDER BASE ELBOW. ANCHOR GROUT TO VAULT W/ 4 #5 BARS, DRILLED AND EPOXIED 3" INTO CONCRETE FLOOR. PROVIDE 2" MIN. CLEARANCE BETWEEN REBAR AND EDGE OF GROUT.
4. CONTRACTOR SHALL ENSURE EXISTING IRRIGATION IS MAINTAINED FOR ALL LANDSCAPING TO REMAIN. MODIFY (E) IRRIGATION AND SPRINKLER HEADS AS NECESSARY TO PROVIDE WATER FOR LANDSCAPING AND TO KEEP WATER OFF OF HARDSCAPED AREAS DURING CONSTRUCTION. FINAL MODIFICATIONS TO THE IRRIGATION SYSTEM AND LANDSCAPING RESTORATION WILL BE PERFORMED BY OTHERS AFTER CONSTRUCTION IS COMPLETE.
5. THE ADJACENT SHOPPING CENTER PARKING LOT SHALL NOT BE USED BY THE CONTRACTOR AT ANY TIME DURING CONSTRUCTION.
6. SEE ELECTRICAL PLANS FOR ADDITIONAL IMPROVEMENTS.

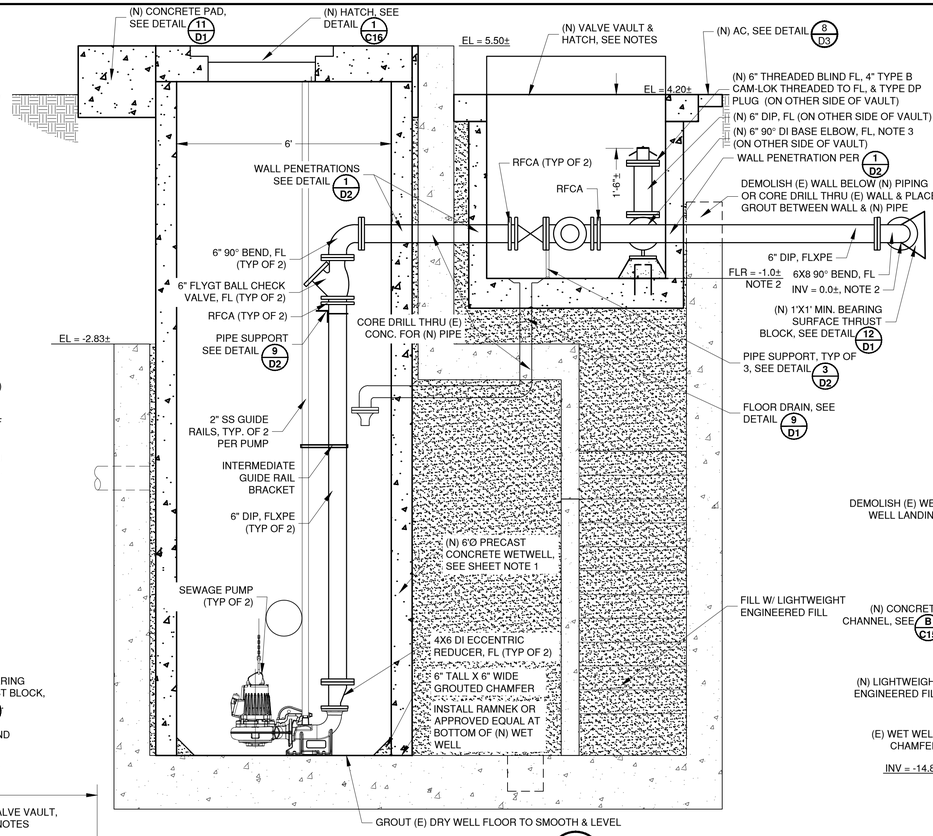

IMPROVEMENT SECTION A C16

SCALE: 1/2" = 1'

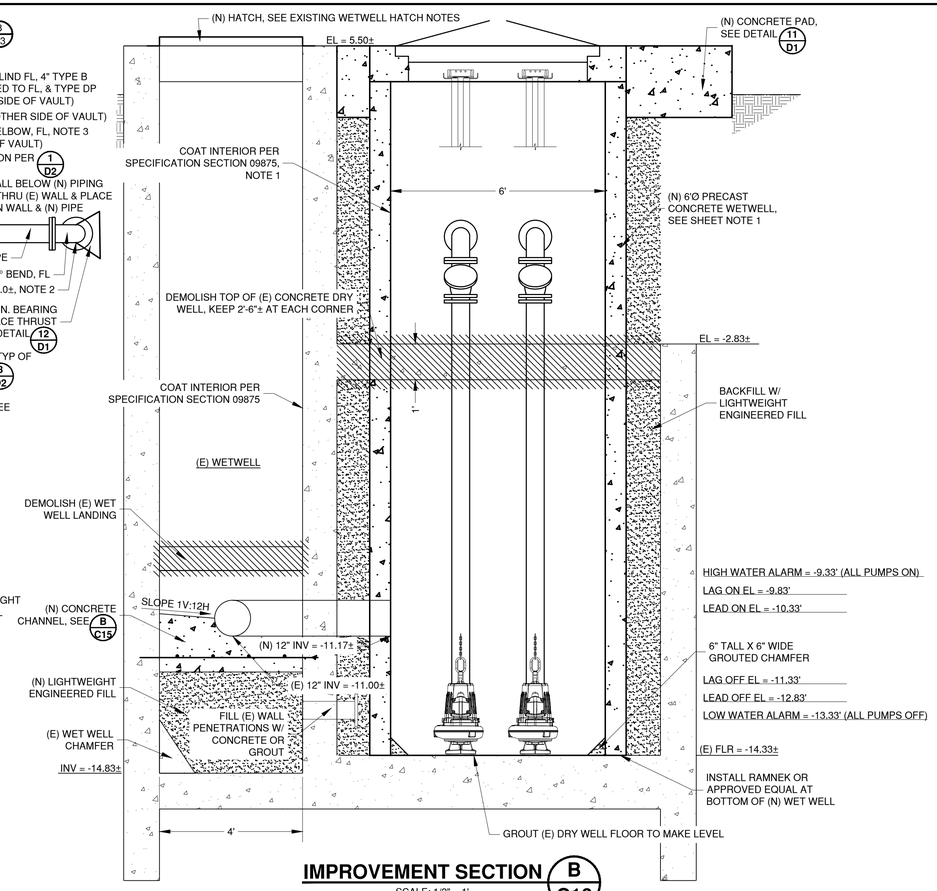

IMPROVEMENT SECTION B C16

SCALE: 1/2" = 1'

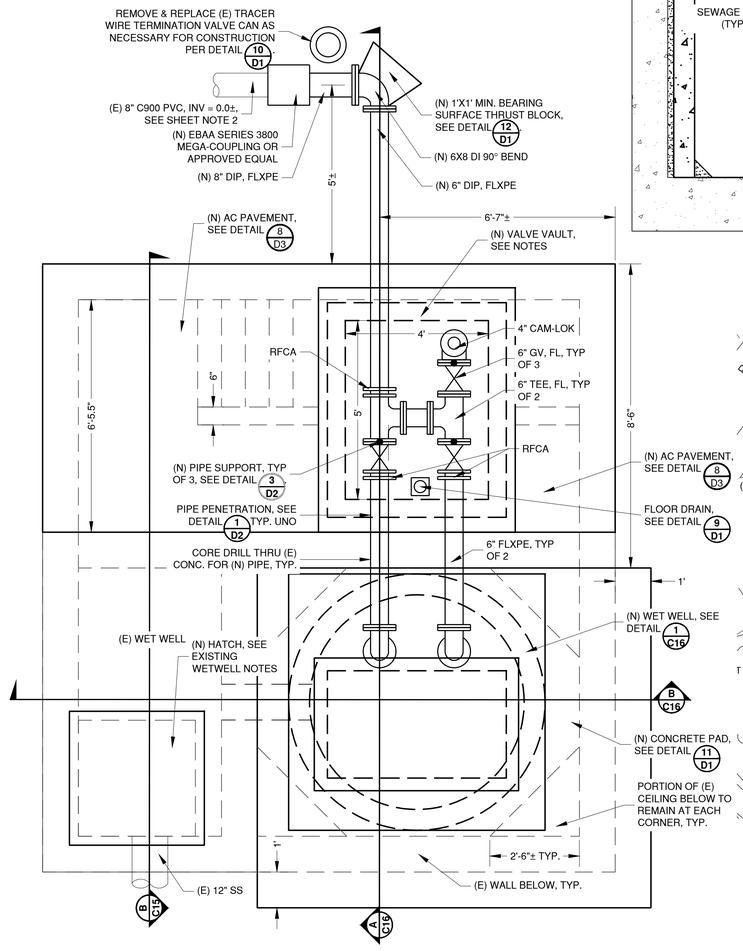

ROOF IMPROVEMENT PLAN VIEW

SCALE: 1/2" = 1'

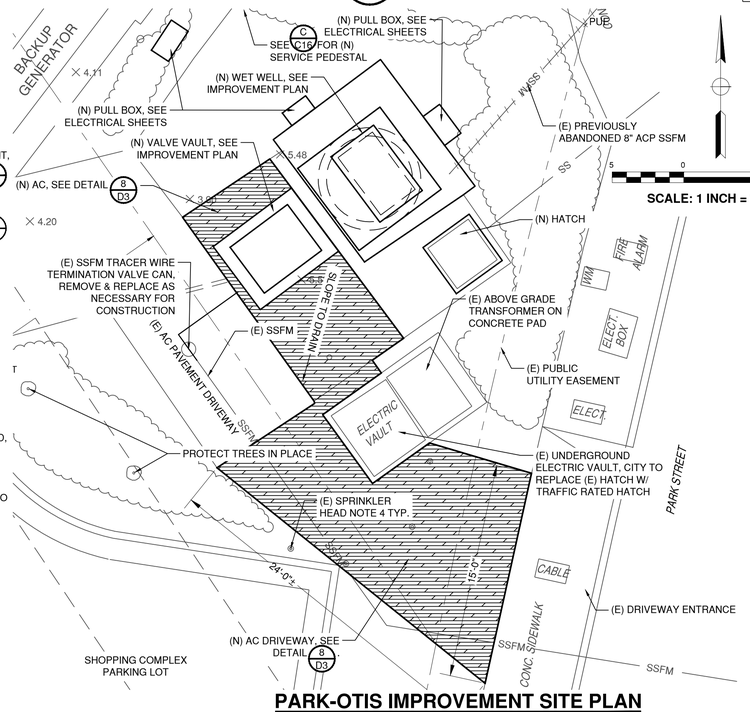

PARK-OTIS IMPROVEMENT SITE PLAN

SCALE: 1" = 5'

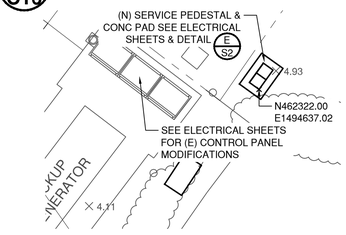

SERVICE PEDESTAL PLAN VIEW C C16

SCALE: 1" = 5'

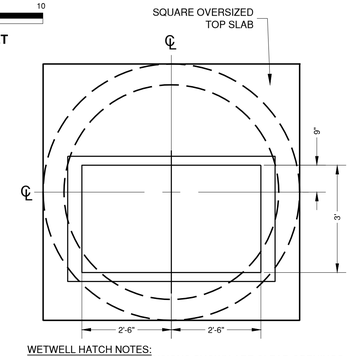

WETWELL HATCH NOTES:
1. ACCESS HATCH DIMENSIONS SHOWN ARE CLEAR OPENINGS.
2. ACCESS HATCH SHALL BE EQUIPPED WITH INTEGRAL FALL PROTECTION. CONTRACTOR SHALL COORDINATE INSTALLATION WITH WETWELL COATING AND ENSURE PROPER INSTALLATION.
3. TOP OF HATCH SHALL BE 1/4" DIAMOND PLATE.
4. WETWELL ACCESS HATCH AND CONCRETE TOP SHALL BE RATED FOR PEDESTRIAN LOADING.
5. HATCH SHALL BE EJ PRODUCT NUMBER H36601191, OR APPROVED EQUAL.
6. HATCH SHALL BE EQUIPPED WITH HYDRAULIC LIFT SPRINGS TO ASSIST WITH OPENING.
7. HATCH SHALL HAVE A SLAM LOCK.
8. ALL HARDWARE AND HINGES SHALL BE SS.

WETWELL HATCH DETAIL 1 C16

SCALE: 1/2" = 1'

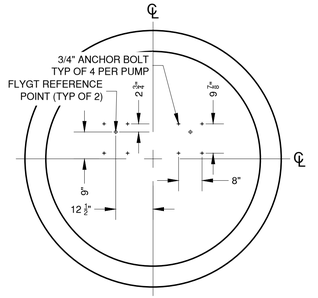

PUMP MOUNTING DETAIL 2 C16

SCALE: 1/2" = 1'

NO	REVISIONS	DATE	APPR
1			
2			
3			
4			
5			
6			

Schaaf & Wheeler
CONSULTING CIVIL ENGINEERS
1171 HOMESTEAD RD, STE. 255
SANTA CLARA, CA 95050
(408) 246-4848

CITY OF ALAMEDA
GROUP 4 - SEWERAGE PUMP STATION RENOVATIONS FOR RELIABILITY AND SAFETY IMPROVEMENTS
PARK-OTIS IMPROVEMENT PLAN & SECTIONS

DATE:	11/27/19	DESIGN:	CLP
SCALE:	AS SHOWN	DRAWN:	CLP
		CHECKED:	BLS

DWG 9425 CASE 35

C16

39 OF 70

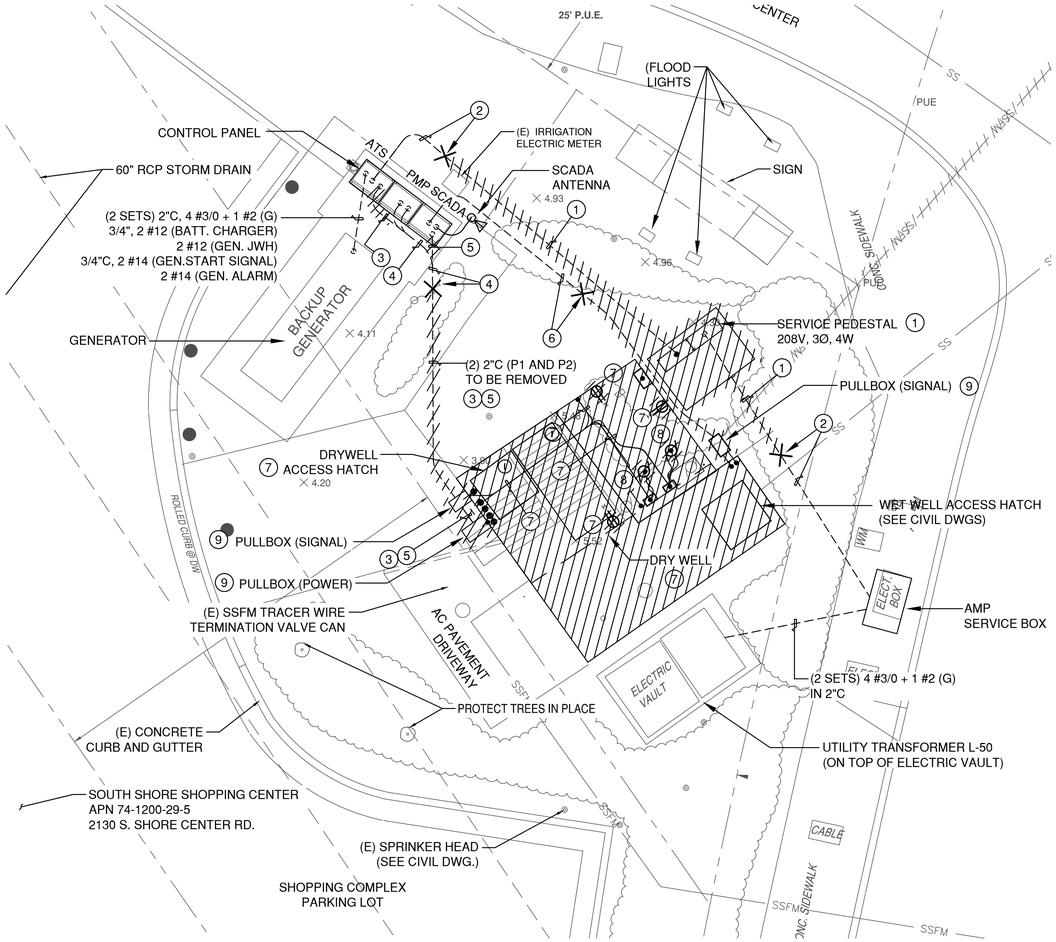

DETAIL 2 NOTES:

1. COORDINATE WITH ALAMEDA MUNICIPAL POWER (AMP) FOR REMOVAL OF SERVICE PEDESTAL, METER. REMOVE PART OF (2) 2"C SERVICE CONDUIT AND REMOVE ALL CONDUCTORS UP TO (E) AMP SERVICE TRANSFORMER, AND UP TO PUMP CONTROL PANEL.
2. (2) 2"C SERVICE CONDUIT TO REMAIN REMOVE ALL CONDUCTORS ALL THE WAY BACK TO THE SOURCE. SEE DWG. E23 FOR (N) WORK REQUIREMENTS.
3. 1"C, (LIGHTS, RECEPTS, SUMP PUMP) TO BE REMOVED ALL THE WAY BACK TO THE SOURCE.
4. (2) 2"C, (PUMP P1 AND P2 POWER AND MONITORING) TO REMAIN FOR RE-USE IN THE NEW CONSTRUCTION. REMOVE ALL CONDUCTORS. SEE DWG. E23 FOR NEW WORK REQUIREMENTS.
5. 1"C, 6 #14 (DRYWELL SIGNAL) TO BE REMOVED ALL THE WAY BACK TO THE SOURCE.
6. 1"C, (PRESSURE LEVEL TRANSMITTER)
   1"C, (FLOAT SWITCHES)
   TO REMAIN. REMOVE ALL PRESSURE LEVEL TRANSMITTER AND FLOAT SWITCH CABLES ALL THE WAY BACK TO THE SOURCE. SEE DWG. E23 FOR NEW WORK REQUIREMENTS.
7. REMOVE ALL CONDUIT, JUNCTION BOXES. WIRING AND DEVICES INCLUDING INTRUSION DETECTORS, LIGHTS, RECEPTACLES, CONTROLS, LEVEL PRESSURE TRANSMITTER ,AND FLOAT SWITCHES THAT MAY EXIST FROM DRY WELL AND WET WELL. SEAL OFF ALL OPENINGS BETWEEN DRY WELL AND WET WELL, AND OPENINGS TO EXTERIOR OF WET WELL.
8. DISCONNECT AND REMOVE PUMP. RETAIN FOR RE-USE IN THE NEW CONSTRUCTION. SEE DWG. E23 FOR NEW WORK INSTALLATION.
9. REMOVE ELECTRICAL EQUIPMENT.

2 PARK OTIS SITE PLAN
SCALE: 1" = 5'-0"

0 5' 10' 15'
SCALE: 1" = 5'-0"

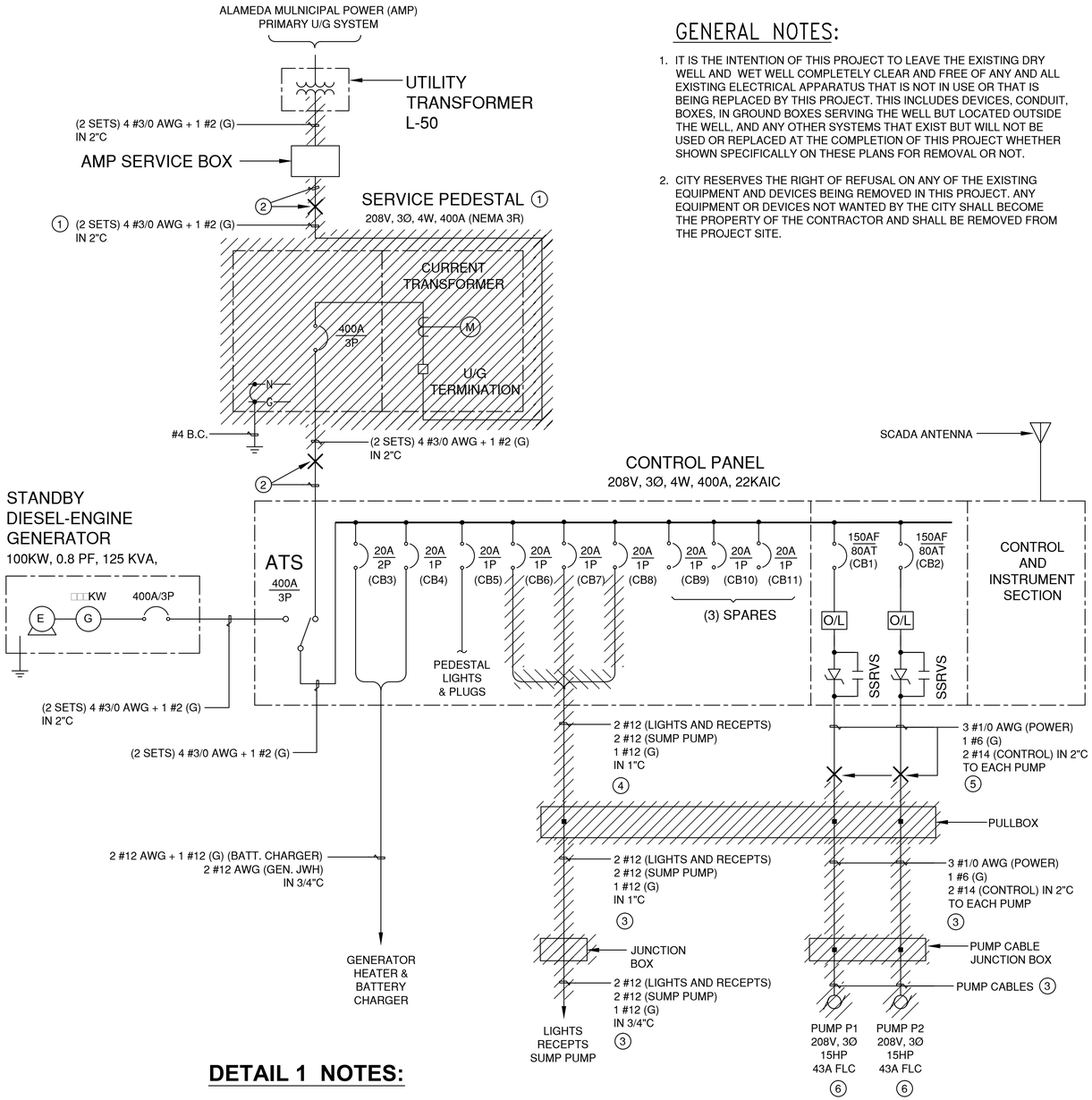

DETAIL 1 NOTES:

1. COORDINATE WITH ALAMEDA MUNICIPAL POWER (AMP) FOR REMOVAL OF SERVICE PEDESTAL, CT AND METER. REMOVE PART OF (2) 2"C SERVICE CONDUIT AND REMOVE ALL CONDUCTORS UP TO (E) AMP SERVICE BOX, AND UP TO PUMP CONTROL PANEL.
2. (2) 2"C SERVICE CONDUIT TO REMAIN. SEE DWG. E23 FOR NEW WORK REQUIREMENTS.
3. REMOVE ALL CONDUIT, PUMP CABLES, JUNCTION BOXES. WIRING AND DEVICES INCLUDING INTRUSION DETECTORS, LIGHTS, RECEPTACLES, CONTROLS, LEVEL PRESSURE TRANSMITTER , AND FLOAT SWITCHES THAT MAY EXIST FROM DRYWELL AND WET WELL. SEAL OFF ALL OPENINGS BETWEEN DRY WELL AND WET WELL AND OPENINGS TO EXTERIOR OF WET WELL.
4. 1"C, (LIGHTS, RECEPTS, SUMP PUMP) TO BE REMOVED ALL THE WAY BACK TO THE SOURCE.
5. (2) 2"C, (PUMP P1 AND P2 POWER AND MONITORING) TO REMAIN FOR RE-USE IN THE NEW CONSTRUCTION. REMOVE ALL CONDUCTORS. SEE DWG. E23 FOR NEW WORK REQUIREMENTS.
6. DISCONNECT AND REMOVE PUMP. RETAIN FOR RE-USE IN THE NEW CONSTRUCTION. SEE DWG. E23 FOR NEW WORK INSTALLATION.

1 PARK OTIS ONE-LINE DIAGRAM
SCHEMATIC

GENERAL NOTES:

1. IT IS THE INTENTION OF THIS PROJECT TO LEAVE THE EXISTING DRY WELL AND WET WELL COMPLETELY CLEAR AND FREE OF ANY AND ALL EXISTING ELECTRICAL APPARATUS THAT IS NOT IN USE OR THAT IS BEING REPLACED BY THIS PROJECT. THIS INCLUDES DEVICES, CONDUIT, BOXES, IN GROUND BOXES SERVING THE WELL BUT LOCATED OUTSIDE THE WELL, AND ANY OTHER SYSTEMS THAT EXIST BUT WILL NOT BE USED OR REPLACED AT THE COMPLETION OF THIS PROJECT WHETHER SHOWN SPECIFICALLY ON THESE PLANS FOR REMOVAL OR NOT.
2. CITY RESERVES THE RIGHT OF REFUSAL ON ANY OF THE EXISTING EQUIPMENT AND DEVICES BEING REMOVED IN THIS PROJECT. ANY EQUIPMENT OR DEVICES NOT WANTED BY THE CITY SHALL BECOME THE PROPERTY OF THE CONTRACTOR AND SHALL BE REMOVED FROM THE PROJECT SITE.

NO	REVISIONS	DATE	APPR
1			
2			
3			
4			
5			
6			
7			

REGISTERED PROFESSIONAL ENGINEER
JULIO C. HERBOCIA
No. 9580
9/30/20
ELECTRICAL
STATE OF CALIFORNIA

engineers, inc.
3350 scott blvd., bldg. 11
santa clara, ca. 95054
(408) 986-8556
FAX (408) 986-9627
PROJECT NO. 18697-06

CITY OF ALAMEDA
GROUP 4 - SEWERAGE PUMP STATION RENOVATIONS FOR RELIABILITY AND SAFETY IMPROVEMENTS
PARK OTIS PUMP STATION
ONE-LINE & SITE PLAN - REMOVAL WORK

DATE:	11/27/19
SCALE:	AS SHOWN
DESIGN:	JCM
DRAWN:	VDM
CHECKED:	JCH

DWG 9425 CASE 35

E22

40 OF **70**

FILE: M:\18697-06 Alameda Pumps - Group 4\00_CAL-E11R.dwg 06/04/18 16:00 by yuong
XREF: M:\18697-01 Alameda Pumps \$_Alameda_Phase-1_Group-3\00_CAL-E11R.dwg
XREF: M:\18697-06 Alameda Pumps - Group 4\SHEET E2.0.dwg
SCALE =
BORDER = M:\18697-01 Alameda Pumps \$_Alameda_Phase-1_Group-3\00_CAL-E11R.dwg
XREF: M:\18697-01 Alameda Pumps \$_Alameda_Phase-1_Group-3\00_CAL-E11R.dwg
XREF: M:\18697-06 Alameda Pumps - Group 4\SHEET E2.0.dwg
XREF: D:\JOBS\APWD\07-Phase 1 Pump Stations\Drawings\PARK OTIS\E11R.dwg
XREF: M:\18697-06 Alameda Pumps - Group 4\SHEET E2.0.dwg

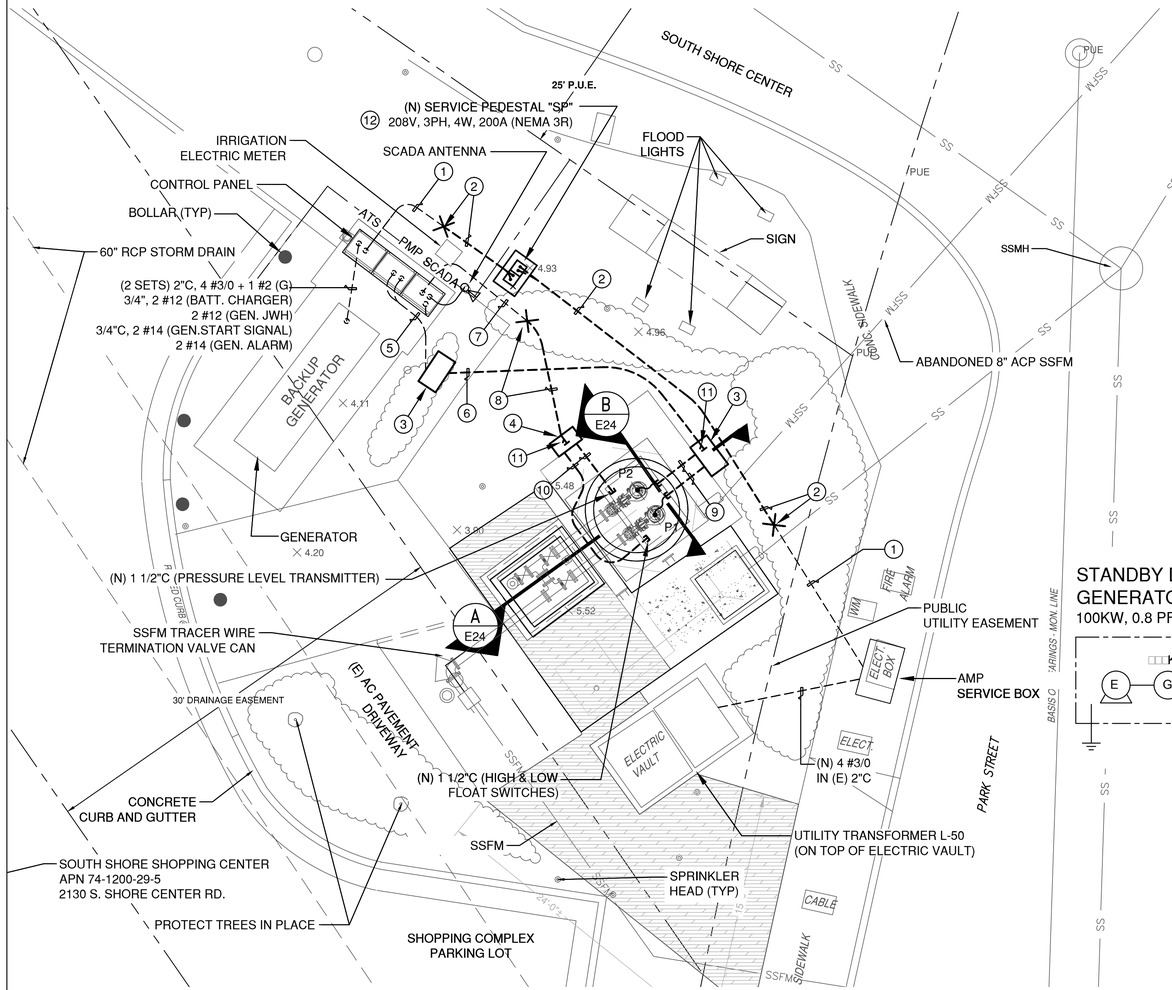

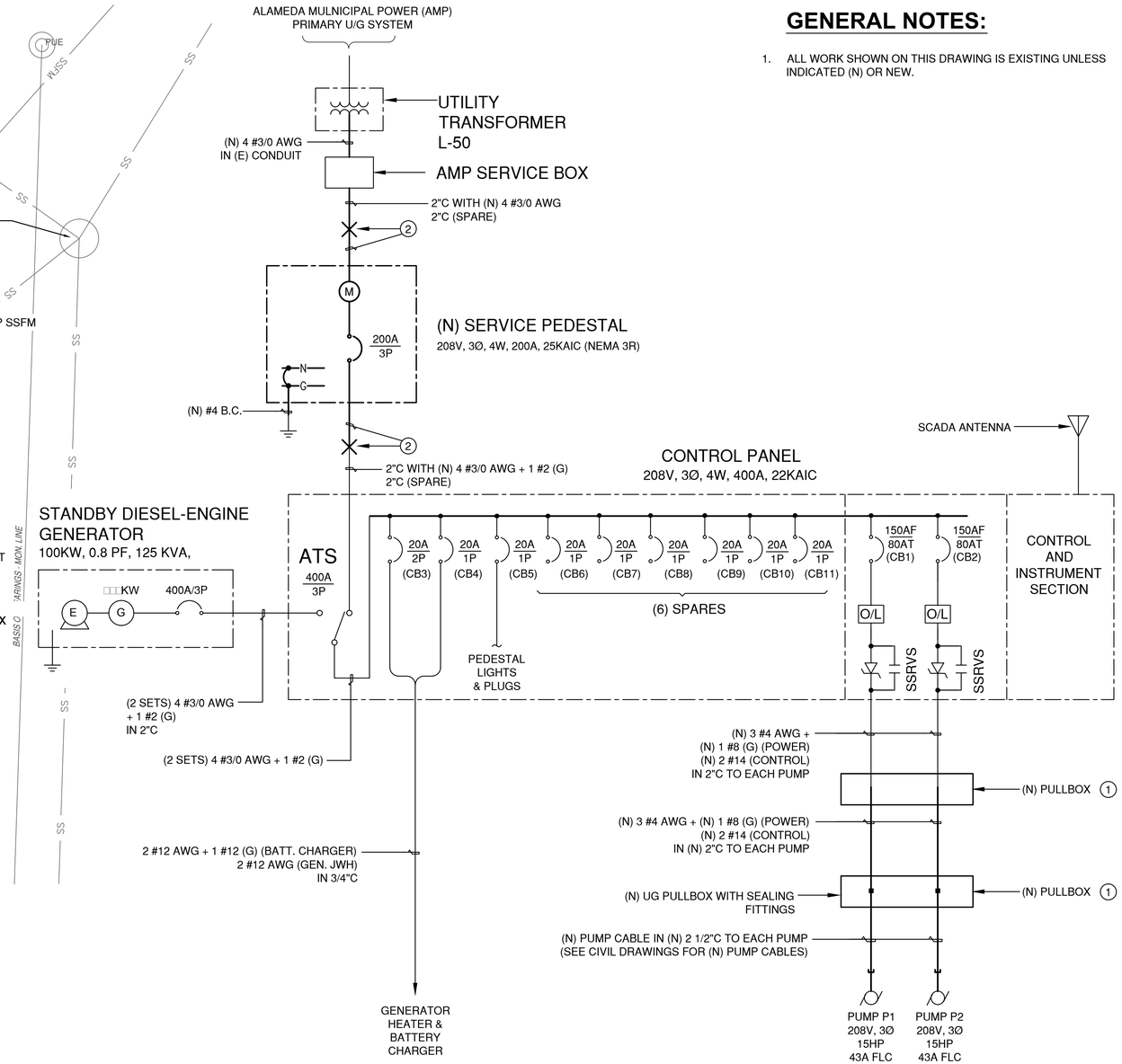

GENERAL NOTES:

1. ALL WORK SHOWN ON THIS DRAWING IS EXISTING UNLESS INDICATED (N) OR NEW.

DETAIL 2 NOTES:

1. (E) 2"C, (SERVICE, 208V) WITH (N) 4 #3/0 AWG (E) 2"C, (SPARE)
2. COORDINATE WITH ALAMEDA MUNICIPAL POWER (AMP) FOR EXTENDING THE (2) (E) CONDUITS TO (N) SERVICE PEDESTAL "SP". PROVIDE (2) (N) 2" PVC CONDUITS. INSTALL IN ACCORDANCE WITH ALAMEDA MUNICIPAL POWER (AMP) STANDARD DETAIL 1-L-412. INSTALL (N) CONDUCTORS FROM (E) AMP SERVICE TRANSFORMER TO (N) SERVICE PEDESTAL "SP" AND FROM (N) SERVICE PEDESTAL TO (E) CONTROL PANEL. SEE ONE-LINE DIAGRAM FOR CABLE SIZE.
3. PROVIDE (N) IN GROUND PULL BOX FOR PUMP POWER AND MONITORING CONTROL CIRCUITS, SIZE 6T, CHRISTY B1730 WITH 12" EXTENSION (17" x 30") REINFORCED TRAFFIC RATED CONCRETE BOX WITH BOLT DOWN, STEEL CHECKER PLATED COVER.
4. PROVIDE (N) IN GROUND PULL BOX FOR CONTROLS, SIZE 5T, CHRISTY B1324 WITH 12" EXTENSION (13" x 24") REINFORCED TRAFFIC RATED CONCRETE BOX WITH BOLT DOWN, STEEL CHECKER PLATED COVER.
5. (E) 2"C PVC WITH
   (N) 3 #4 AWG + 1 #8 (G) (PUMP P1 POWER)
   (N) 2 #14 (PUMP P1 CONTROL)
   (E) 2"C PVC WITH
   (N) 3 #4 AWG + 1 #8 (G) (PUMP P2 POWER)
   (N) 2 #14 (PUMP P2 CONTROL)
6. TERMINATE (E) (2) 2"C INSIDE 6T PULLBOX. RUN (N) (2) 2"C BETWEEN PULLBOXES FOR PUMP POWER, MOISTURE AND TEMPERATURE MONITORING CONTROL CIRCUITS. SEE ONE-LINE DIAGRAM FOR CABLE SIZES.
7. (E) 1"C, ((N) PRESSURE LEVEL TRANSMITTER)
   (E) 1"C, ((N) FLOAT SWITCHES)
8. EXTEND (E) (2) 1"C FOR (N) PRESSURE LEVEL TRANSMITTER AND (N) HIGH AND LOW FLOAT CABLES CONTRACTOR TO MATCH EXISTING CONDUIT MATERIAL. SEE ONE-LINE DIAGRAM FOR CABLE SIZES.
9. PROVIDE (N) (2) 2 1/2" PVC COATED RSC CONDUIT FOR PUMP POWER CABLING.
10. PROVIDE (N) (2) 1 1/2" PVC COATED RSC FOR PRESSURE LEVEL TRANSMITTER AND HIGH AND LOW FLOAT CABLES.
11. PROVIDE (N) CLASS I, DIV. 1 SEALING FITTING FOR ALL CONDUITS LEAVING THIS PULLBOX TOWARDS THE MOTOR CONTROL CENTER (MCC). SEE DWG. E36 FOR PULLBOX DETAILS.

DETAIL 1 NOTES:

1. PROVIDE IN GROUND PULL BOX FOR PUMP POWER AND MONITORING CONTROL CIRCUITS, SIZE 6T, CHRISTY B1730 WITH 12" EXTENSION (17" x 30") REINFORCED TRAFFIC RATED CONCRETE BOX WITH BOLT DOWN, STEEL CHECKER PLATED COVER.
2. (E) 2"C, (SERVICE, 208V) WITH (N) 4 #3/0 AWG + 1 #2 (G) (E) 2"C, (SPARE)

2 PARK OTIS SITE PLAN
SCALE: 1" = 5'-0"

0 5' 10' 15'
SCALE: 1" = 5'-0"

1 PARK OTIS ONE-LINE DIAGRAM
SCHEMATIC

NO	REVISIONS	DATE	APPR
1			
2			
3			
4			
5			
6			
7			

engineers, inc.
3350 scott blvd., bldg. 11
santa clara, ca. 95054
(408) 986-8558
FAX (408) 986-9627
PROJECT NO. 18697-06

CITY OF ALAMEDA
GROUP 4 - SEWERAGE PUMP STATION RENOVATIONS FOR RELIABILITY AND SAFETY IMPROVEMENTS
PARK OTIS PUMP STATION
ONE-LINE & SITE PLAN - NEW WORK

DATE: 11/27/19
SCALE: AS SHOWN
DESIGN: JKM
DRAWN: VDM
CHECKED: JOH

DWG 9425 CASE 35

E23

41 OF 70

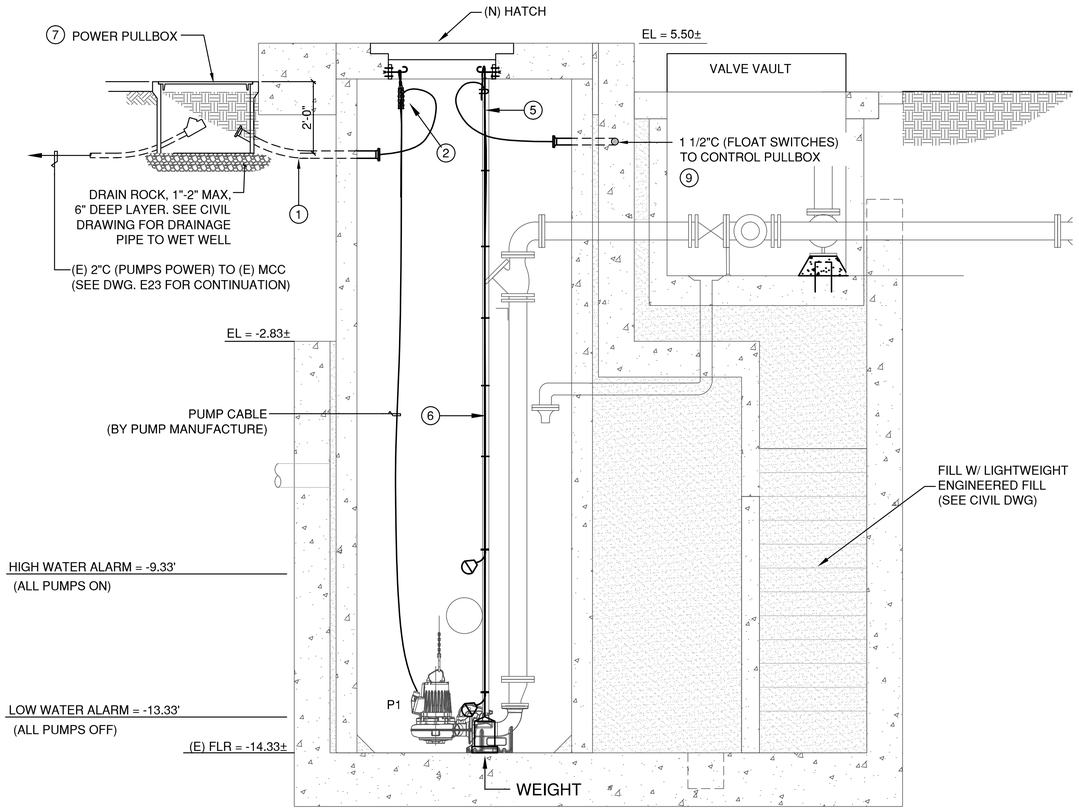

A
–

WET WELL ELEVATION

SCALE: 1/2" = 1'-0"

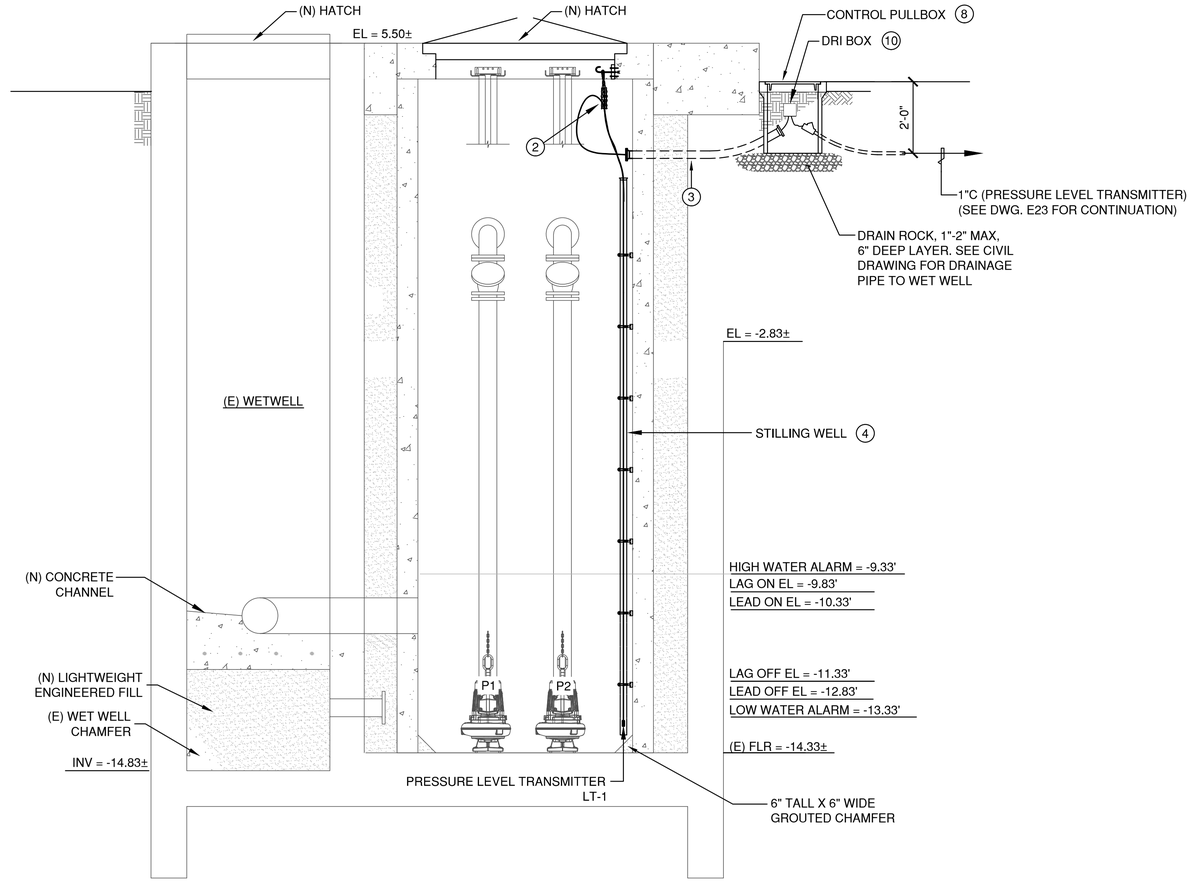

B
–

WET WELL ELEVATION

SCALE: 1/2" = 1'-0"

SHEET NOTES:

1. (1) 2 1/2"C (PUMP FEEDER CABLE).
INSTALL INSULATED BUSHING AT WET WELL END AND INSULATED GROUNDING BUSHING AT THE POWER PULLBOX. DUCT SEAL BOTH ENDS AFTER CABLE INSTALLATION.

2. STAINLESS STEEL HOOK, STAINLESS STEEL CHANNEL, STAINLESS STEEL ANCHOR BOLTS, AND STAINLESS STEEL CABLE GRIP (USE CABLE HANGER FOR PRESSURE LEVEL TRANSMITTER).

3. (1) 1 1/2"C (PRESSURE LEVEL TRANSMITTER LT-1).
INSTALL INSULATED BUSHING AT WET WELL END AND INSULATED GROUNDING BUSHING AT THE CONTROL PULLBOX. DUCT SEAL BOTH END AFTER CABLE INSTALLATION

4. PRESSURE LEVEL TRANSMITTER INSIDE STILLING WELL.
SEE CIVIL DWG. D2, DETAIL 8. ADJUST CHAMFER PER CIVIL DRAWINGS.

5. STAINLESS STEEL HOOK, STAINLESS STEEL CHANNEL, STAINLESS STEEL ACHOR BOLT, STAINLESS STEEL THIMBLE, STAINLESS STEEL CABLE CLAMPS, AND PVC COATED 15-POUND WEIGHT.

6. 1/4" DIA. STAINLESS STEEL CABLE WITH FLOAT SWITCH CABLES. TIE WRAP WITH HEAVY PLASTIC TIE AT EVERY 2 FT.

7. PROVIDE IN GROUND PULL BOX FOR PUMP POWER AND MONITORING CONTROL CIRCUITS, SIZE 6T, CHRISTY B1730 WITH 12" EXTENSION (17" x 30") REINFORCED TRAFFIC RATED CONCRETE BOX WITH BOLT DOWN, STEEL CHECKER PLATED COVER.

8. PROVIDE IN GROUND PULL BOX FOR INSTRUMENTATION, SIZE 5T, CHRISTY B1324 WITH 12" EXTENSION (13" x 24") REINFORCED TRAFFIC RATED CONCRETE BOX WITH BOLT DOWN, STEEL CHECKER PLATED COVER.

9. (1) 1 1/2"C (FLOAT SWITCHES).
INSTALL INSULATED BUSHING AT WET WELL END AND INSULATED GROUNDING BUSHING AT THE CONTROL PULLBOX. DUCT SEAL BOTH END AFTER CABLE INSTALLATION

10. DRI BOX FOR TERMINATING PRESSURE LEVEL TRANSMITTER CABLE PMC. CAT. No. TE10.

NO	REVISIONS	DATE	APPR
1			
2			
3			
4			
5			
6			

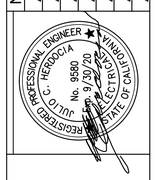

engineers, inc.
3350 scott blvd., bldg. 11
santa clara, ca. 95054
(408) 986-8558
FAX (408) 986-9627
PROJECT NO. 18697-06

CITY OF ALAMEDA
GROUP 4 - SEWERAGE PUMP STATION RENOVATIONS
FOR RELIABILITY AND SAFETY IMPROVEMENTS
PARK OTIS PUMP STATION
WET WELL ELEVATIONS

DATE:	11/27/19	SCALE:	AS SHOWN	DESIGN:	JCH	DRAWN:	VDM	CHECKED:	JCH

DWG 9425 CASE 35

E24

42 OF **70**

File: M:\18697-06 Alameda Pumps – Group 4\41_PKO_E24.dwg, 11/27/2019 2:07 PM, Last saved: Vuong, PlotDate: 11/27/2019 3:44 PM By: Vuong Mai, Plot scale: 1:2.5849, Plot Size: ANSI A (8.50 x 11.00 Inches)
Xrefs: Group3_Well Details - SHEET_S&W_Group-4 PARK-OTIS_072419

#2 CATALINA PUMP STATION

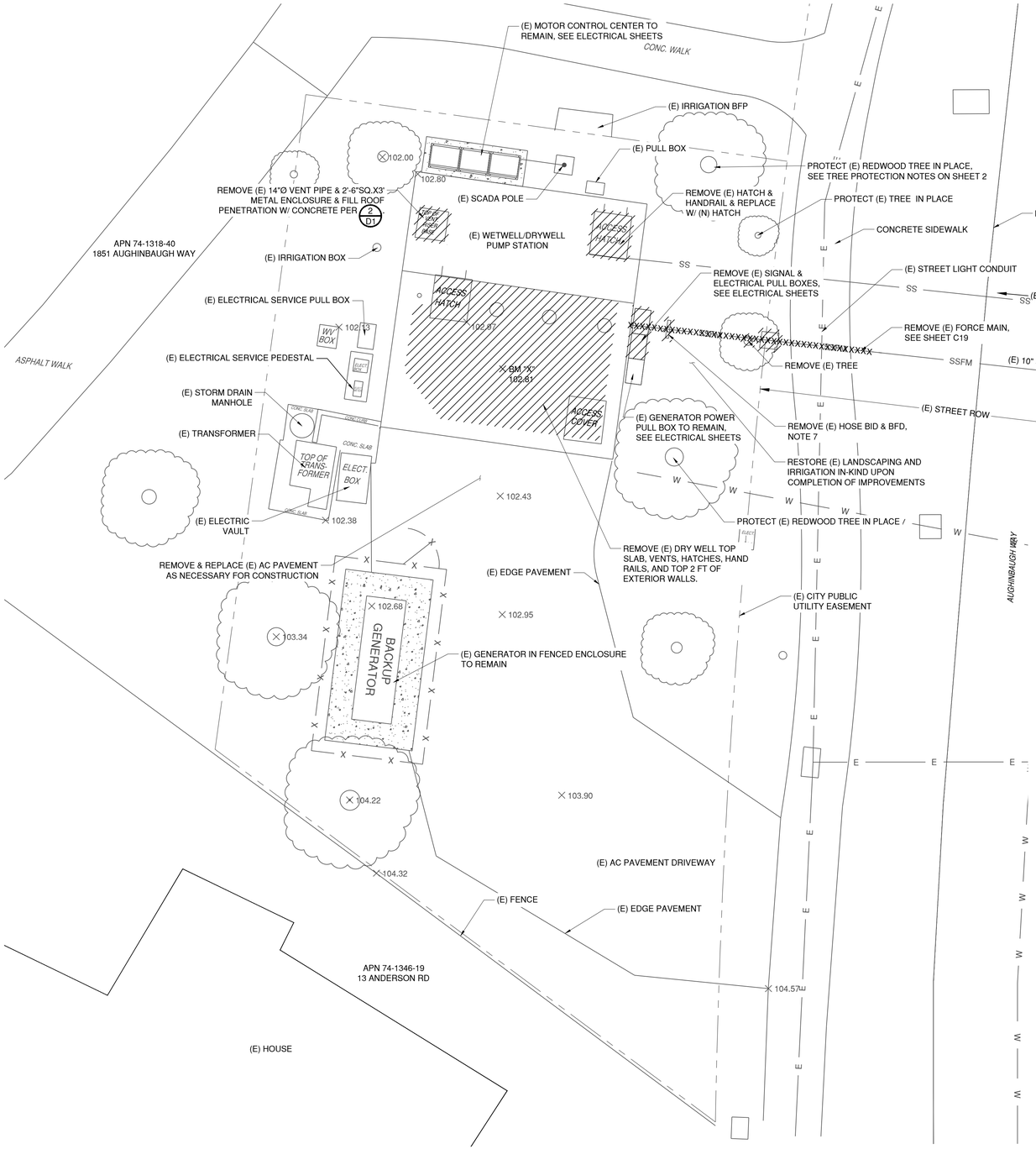

NOTES:

1. CONTRACTOR TO REMOVE ALL ELECTRICAL EQUIPMENT FROM DRYWELL INCLUDING, BUT NOT LIMITED TO, ELECTRICAL PANELS, CONDUITS, LIGHTS, AND SWITCHES. FOR DETAILED ELECTRICAL DEMOLITION REQUIREMENTS, REFER TO ELECTRICAL SHEETS.
2. CONTRACTOR SHALL REMOVE ALL VENTILATION EQUIPMENT INCLUDING FANS, DUCTING AND RELATED CONDUIT, ETC. WHERE DUCTING PENETRATES THE DRY WELL CEILING, CONTRACTOR SHALL TRIM DUCTING FLUSH AT THE CEILING.
3. CONTRACTOR SHALL PROVIDE CONTINUOUS PUMPING CAPACITY FROM THE TIME WHEN THE EXISTING STATION IS TAKEN OFFLINE UNTIL THE IMPROVEMENTS HAVE BEEN ACCEPTED BY THE CITY. AT THIS LOCATION, IT IS ACCEPTABLE TO USE EXISTING PUMPS TO MAINTAIN EXISTING SEWER CAPACITY PROVIDED THAT POWER AND CONTROLS ARE CONTINUOUSLY SUPPLIED.
5. CONTRACTOR SHALL PROVIDE A MINIMUM FIRM STATION CAPACITY OF 550 GPM.
6. FORCE MAIN DISCHARGES TO A MANHOLE AT THE INTERSECTION OF AUGHINBAUGH WAY AND KOFMAN PKWY APPROXIMATELY 1,100 FEET TO THE NORTH EAST OF THE PUMP STATION.
7. REMOVE EXISTING WATER SERVICE WITHIN LIMITS OF EXCAVATION AND CAP ENDS. COORDINATE WITH EAST BAY MUNICIPAL DISTRICT (EBMUD) & THE CITY TO ABANDON THE WATER SERVICE, SEE SPECIFICATION SECTION 02532-3.02.C FOR ADDITIONAL REQUIREMENTS.
8. SEE ELECTRICAL SHEETS FOR ADDITIONAL PUMP STATION IMPROVEMENTS.

CATALINA DEMOLITION SITE PLAN

SCALE: 1" = 5'

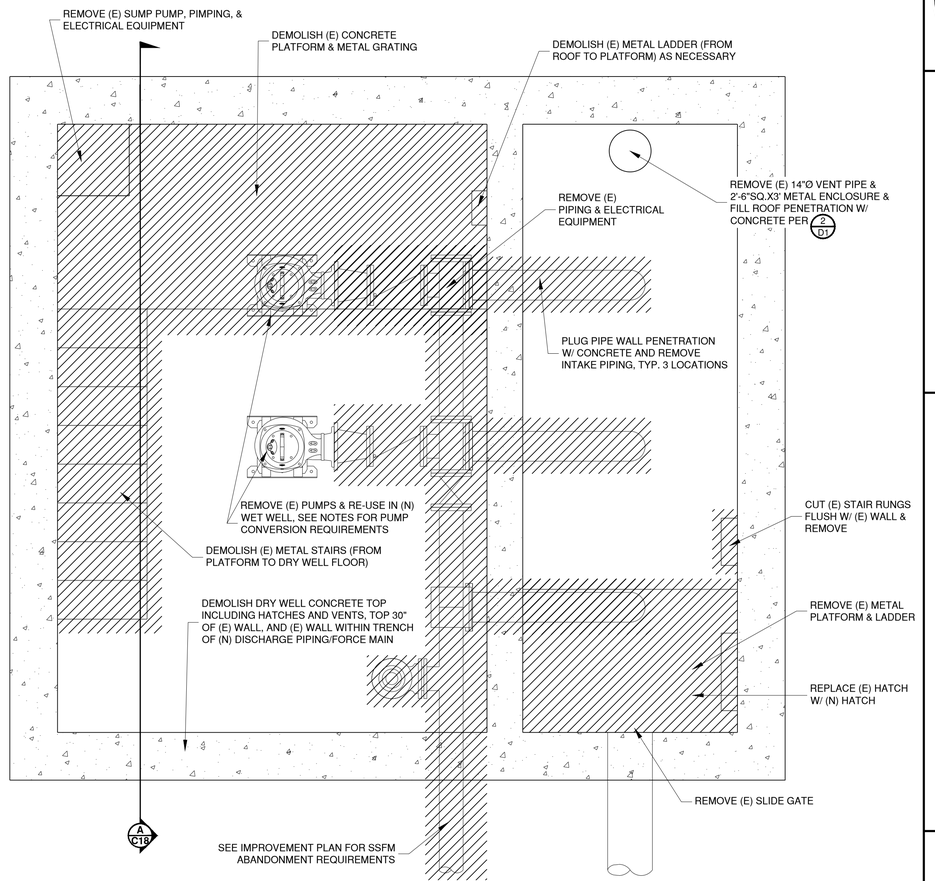

PUMP DEMOLITION PLAN

SCALE:1/2" = 1'

CATALINA BASIS OF BEARINGS

HELD BEARING AND COORDINATES PER TRACT 4024 SHEET 3 OF 4 MON "I" TO MON "L" S 89° 18' 59" E
ACTUAL N,E: "I" = N455984.99 E1493836.98
"L" = N455982.49 E1494046.49

CATALINA BENCHMARKS

HELD SSMH 9811056 RIM AS SHOWN ON SYSTEM MAP ELEV. = 104.78

LOCAL BM SET ON EXISTING WETWELL/DRYWELL, SHOWN ON PLAN

CATALINA PS ADDRESS

1849 AUGHINBAUGH WAY, ALAMEDA, CA

NO	REVISIONS	DATE	APPR
1			
2			
3			
4			
5			
6			

Schaaf & Wheeler
CONSULTING CIVIL ENGINEERS
1171 HOMESTEAD RD, STE. 255
SANTA CLARA, CA 95050
(408) 246-4848

CITY OF ALAMEDA
GROUP 4 - SEWERAGE PUMP STATION RENOVATIONS FOR RELIABILITY AND SAFETY IMPROVEMENTS

CATALINA DEMOLITION PLANS

DATE: 11/27/19
SCALE: AS SHOWN
DESIGN: CLP
DRAWN: CLP
CHECKED: BLS

DWG 9425 CASE 35

C17

43 OF 70

#2 CATALINA PUMP STATION

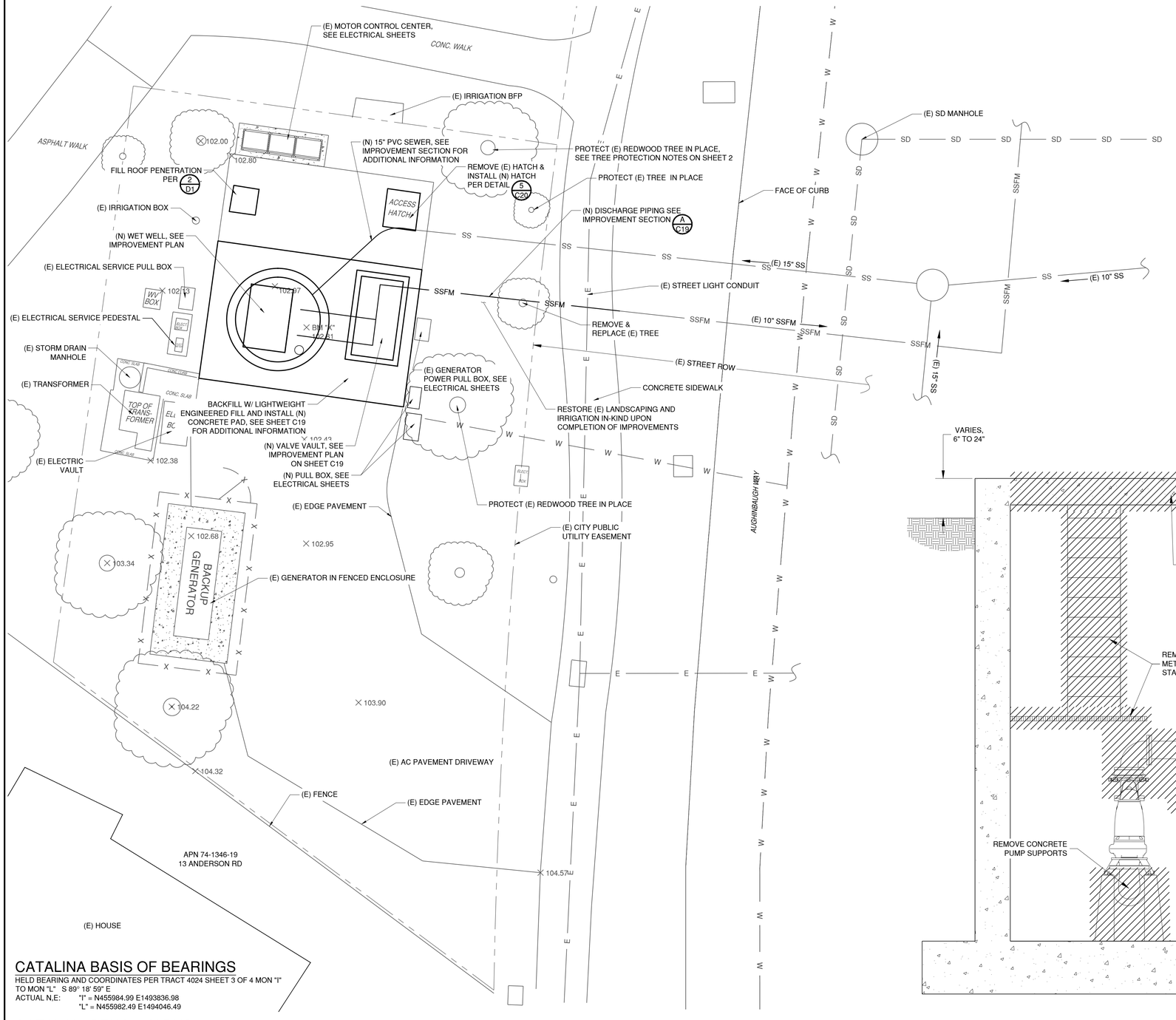

CATALINA BASIS OF BEARINGS

HELD BEARING AND COORDINATES PER TRACT 4024 SHEET 3 OF 4 MON "I" TO MON "L" S 89° 18' 59" E
ACTUAL N.E: "I" = N455984.99 E1493836.98
"L" = N455982.49 E1494046.49

CATALINA BENCHMARKS

HELD SSMH 9811056 RIM AS SHOWN ON SYSTEM MAP ELEV. = 104.78

LOCAL BM SET ON EXISTING WETWELL/DRYWELL, SHOWN ON PLAN

CATALINA PS ADDRESS

1849 AUGHINBAUGH WAY, ALAMEDA, CA

CATALINA IMPROVEMENT SITE PLAN

SCALE: 1" = 5'

NOTES:
1. CONTRACTOR TO REMOVE ALL ELECTRICAL EQUIPMENT FROM DRYWELL INCLUDING, BUT NOT LIMITED TO, ELECTRICAL PANELS, CONDUITS, LIGHTS, AND SWITCHES. FOR DETAILED ELECTRICAL DEMOLITION REQUIREMENTS, REFER TO ELECTRICAL SHEETS.
2. CONTRACTOR SHALL REMOVE ALL VENTILATION EQUIPMENT INCLUDING FANS, DUCTING AND RELATED CONDUIT, ETC. WHERE DUCTING PENETRATES THE DRY WELL CEILING, CONTRACTOR SHALL TRIM DUCTING FLUSH AT THE CEILING.
3. CONTRACTOR SHALL PROVIDE CONTINUOUS PUMPING CAPACITY FROM THE TIME WHEN THE EXISTING STATION IS TAKEN OFFLINE UNTIL THE IMPROVEMENTS HAVE BEEN ACCEPTED BY THE CITY. AT THIS LOCATION, IT IS ACCEPTABLE TO USE EXISTING PUMPS TO MAINTAIN EXISTING SEWER CAPACITY PROVIDED THAT POWER AND CONTROLS ARE CONTINUOUSLY SUPPLIED.
5. CONTRACTOR SHALL PROVIDE A MINIMUM FIRM STATION CAPACITY OF 550 GPM.
6. FORCE MAIN DISCHARGES TO A MANHOLE AT THE INTERSECTION OF AUGHINBAUGH WAY AND KOFMAN PKWY APPROXIMATELY 1,100 FEET TO THE NORTH EAST OF THE PUMP STATION.
7. SEE ELECTRICAL SHEETS FOR ADDITIONAL PUMP STATION IMPROVEMENTS.

5 0 5 10

SCALE: 1 INCH = 5 FEET

PUMP DEMOLITION SECTION A C18

SCALE:1/2" = 1'

NO	REVISIONS	DATE	APPR
1			
2			
3			
4			
5			
6			
7			

Schaaf & Wheeler
CONSULTING CIVIL ENGINEERS
1171 HOMESTEAD RD, STE. 255
SANTA CLARA, CA 95050
(408) 246-4848

CITY OF ALAMEDA
GROUP 4 - SEWERAGE PUMP STATION RENOVATIONS FOR RELIABILITY AND SAFETY IMPROVEMENTS
CATALINA SITE IMPROVEMENT PLAN & DEMOLITION SECTION

DATE: 11/27/19
SCALE: AS SHOWN
DESIGN: CLP
DRAWN: CLP
CHECKED: BLS

DWG 9425 CASE 35

C18

#2 CATALINA PUMP STATION

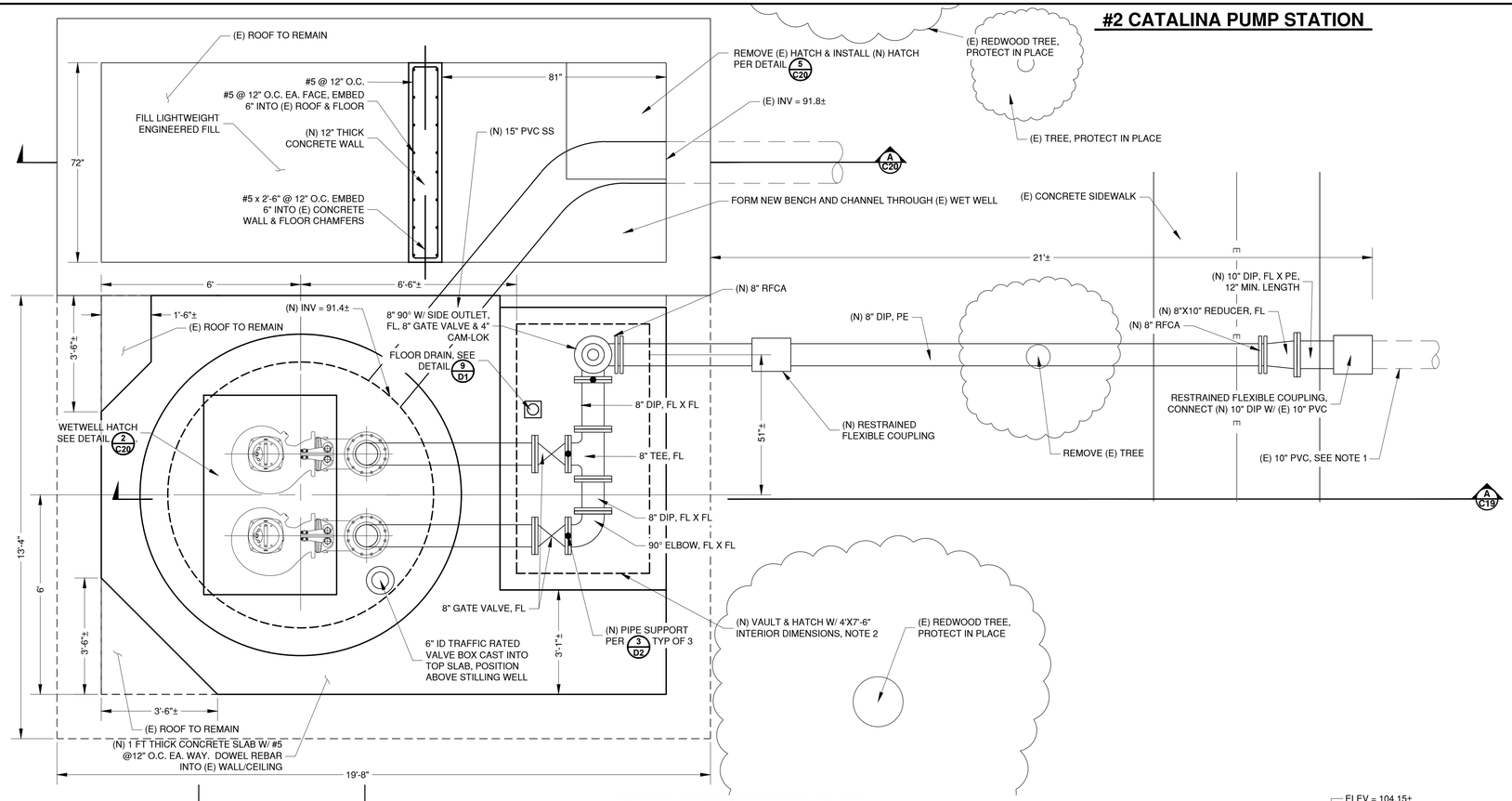

PUMP IMPROVEMENT PLAN

SCALE:1/2" = 1'

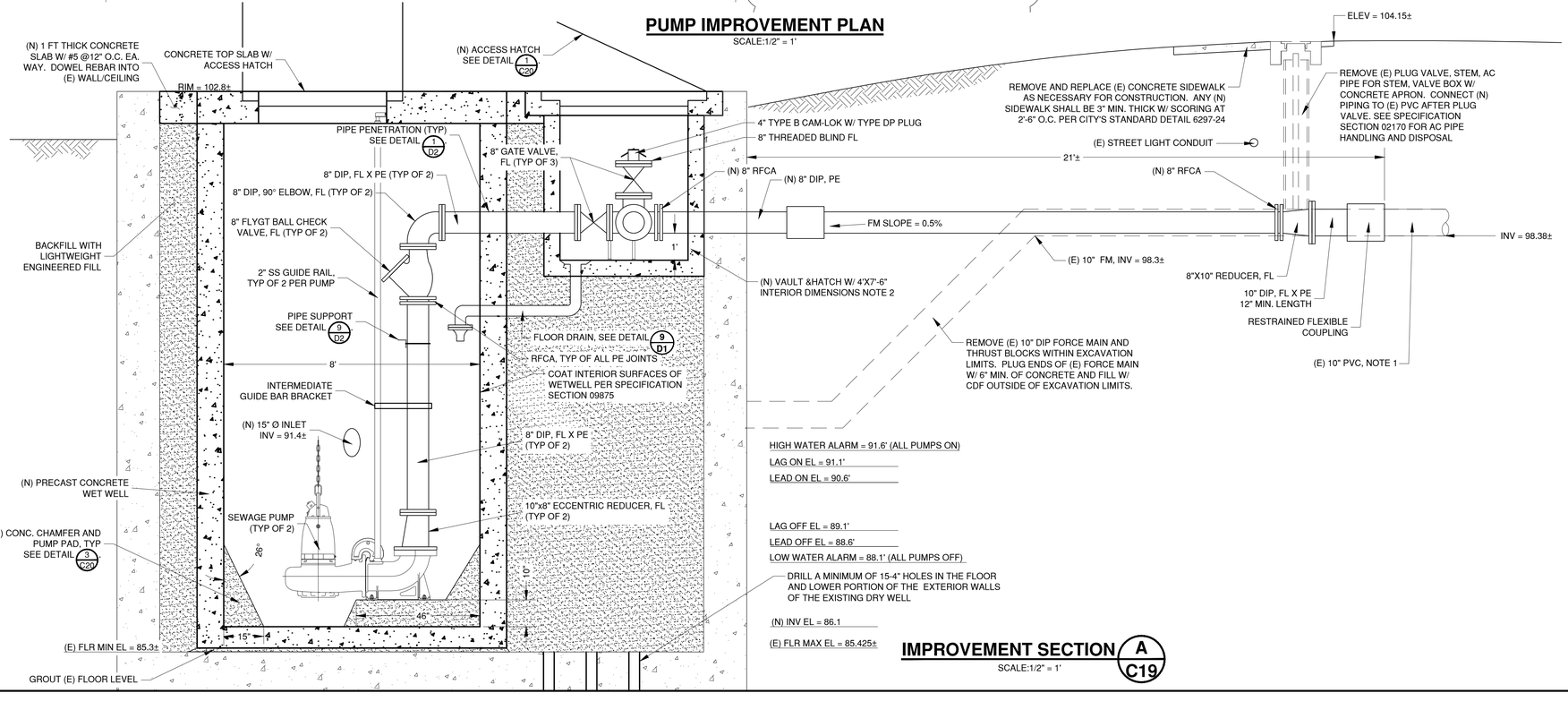

IMPROVEMENT SECTION A C19

SCALE:1/2" = 1'

CATALINA PUMP NOTES:
THE TWO EXISTING FLYGT NP 3153 MT DRYWELL PUMPS SHALL BE REMOVED AND REUSED IN THE NEW WETWELL. SEE SPECIFICATION SECTION 11312 FOR PUMP CONVERSION REQUIREMENTS.

SHEET NOTES:
1. CONTRACTOR SHALL POTHOLE (E) FORCE MAIN PRIOR TO CONSTRUCTION TO CONFIRM LOCATION, SIZE, & MATERIAL PRIOR TO ORDERING PUMP STATION WET WELL, VAULT, AND COUPLING.
2. CONTRACTOR SHALL BACKFILL (E) DRY WELL TO ELEV = 96'± PRIOR TO REMOVING A PORTION OF THE (E) ROOF AT THE (N) VALVE VAULT LOCATION.
3. SEE DETAIL 8 D1 FOR INSTALLATION OF SSFM. INSTALL A CONCRETE SADDLE PER DETAIL 6 D1 WHERE CLEARANCE BETWEEN (E) UTILITY & (N) SSFM IS LESS THAN 12".

NO	REVISIONS	DATE	APPR
1			
2			
3			
4			
5			
6			

Schaaf & Wheeler
CONSULTING CIVIL ENGINEERS
1171 HOMESTEAD RD, STE. 255
SANTA CLARA, CA 95050
(408) 246-4848

CITY OF ALAMEDA
GROUP 4 - SEWERAGE PUMP STATION RENOVATIONS FOR RELIABILITY AND SAFETY IMPROVEMENTS
CATALINA IMPROVEMENT PLAN & SECTION

DATE:	11/27/19
SCALE:	AS SHOWN
DESIGN:	CLP
DRAWN:	CLP
CHECKED:	BLS

DWG 9425 CASE 35

C19

45 OF 70

#2 CATALINA PUMP STATION

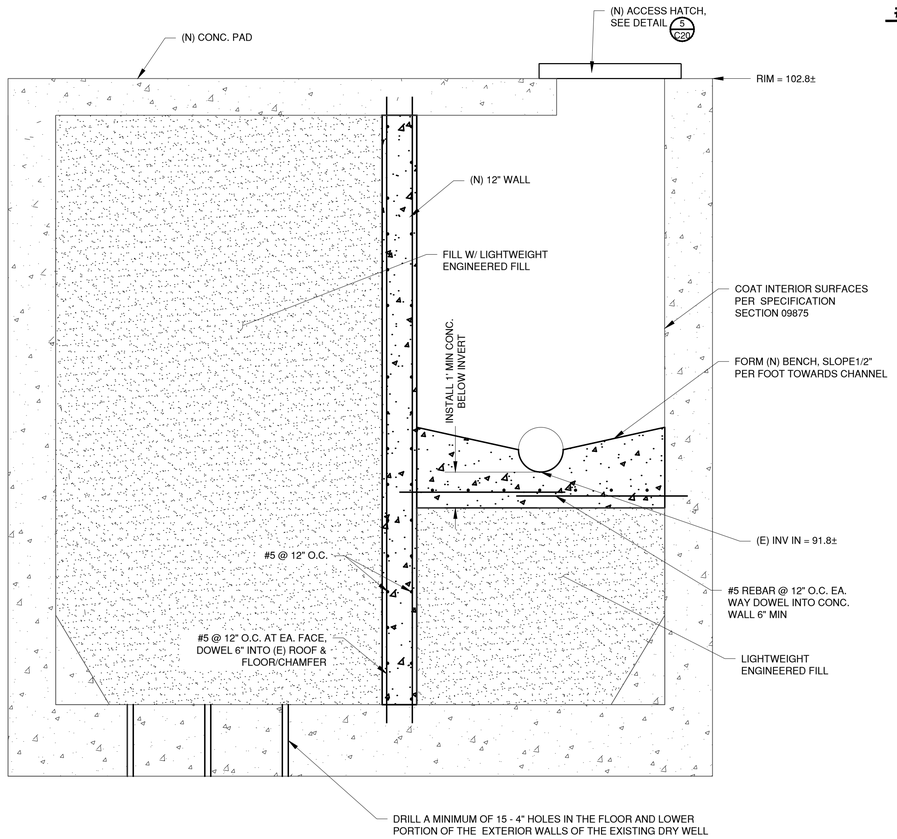

IMPROVEMENT SECTION A / C20
SCALE:1/2" = 1'

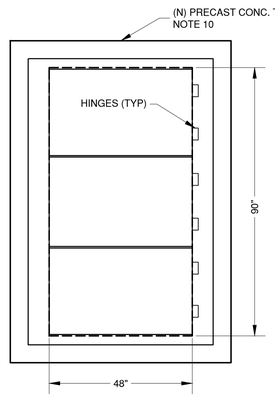

VALVE VAULT HATCH NOTES:
1. CONTRACTOR SHALL BACKFILL (E) DRY WELL TO ELEV = 96'± PRIOR TO REMOVING ROOF AT (N) VALVE VAULT & INSTALLING (N) VALVE VAULT.
2. ACCESS HATCH DIMENSIONS SHOWN ARE CLEAR OPENINGS.
3. ACCESS HATCH SHALL BE EQUIPPED WITH INTEGRAL FALL PROTECTION.
4. TOP OF HATCH SHALL BE 1/4" DIAMOND PLATE.
5. VALVE VAULT ACCESS HATCH AND CONCRETE TOP SHALL BE RATED FOR UNINTENDED H-20 LOADING.
6. HATCH SHALL BE EJ PRODUCT NUMBER H48901993, OR APPROVED EQUAL.
7. HATCH SHALL BE EQUIPPED WITH HYDRAULIC LIFT SPRINGS TO ASSIST WITH OPENING.
8. HATCH SHALL HAVE A RECESSED PADLOCK CLIP FOR LOCKING.
9. ALL HARDWARE AND HINGES SHALL BE SS.
10. OVERSIZE TOP SLAB AS NECESSARY TO PROVIDE CLEARANCE FOR HATCH FRAME.

VALVE VAULT HATCH DETAIL 1 / C20
SCALE:1/2" = 1'

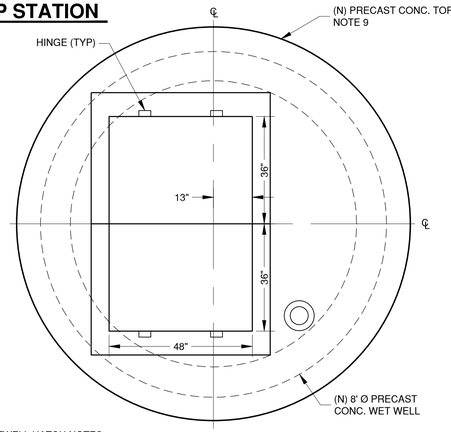

WETWELL HATCH NOTES:
1. ACCESS HATCH DIMENSIONS SHOWN ARE CLEAR OPENINGS.
2. ACCESS HATCH SHALL BE EQUIPPED WITH INTEGRAL FALL PROTECTION. CONTRACTOR SHALL COORDINATE INSTALLATION WITH WETWELL COATING AND ENSURE PROPER INSTALLATION.
3. TOP OF HATCH SHALL BE 1/4" DIAMOND PLATE
4. WETWELL ACCESS HATCH AND CONCRETE TOP SHALL BE RATED FOR UNINTENDED H-20 LOADING.
5. HATCH SHALL BE EJ PRODUCT NUMBER H48721996, OR APPROVED EQUAL.
6. HATCH SHALL BE EQUIPPED WITH HYDRAULIC LIFT SPRINGS TO ASSIST WITH OPENING.
7. HATCH SHALL HAVE A RECESSED PADLOCK CLIP FOR LOCKING
8. ALL HARDWARE AND HINGES SHALL BE SS
9. OVERSIZE TOP SLAB AS NECESSARY TO PROVIDE CLEARANCE FOR HATCH FRAME.

WETWELL HATCH DETAIL 2 / C20
SCALE:1/2" = 1'

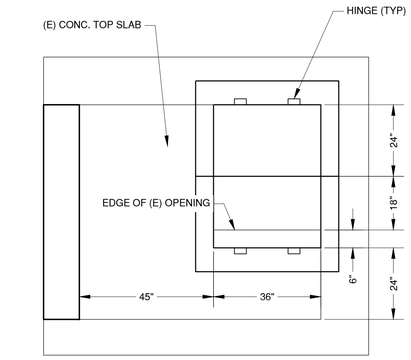

FLOW THROUGH CHANNEL HATCH NOTES:
1. ACCESS HATCH DIMENSIONS SHOWN ARE CLEAR OPENINGS.
2. ACCESS HATCH SHALL BE EQUIPPED WITH INTEGRAL FALL PROTECTION.
3. TOP OF HATCH SHALL BE 1/4" DIAMOND PLATE.
4. FLOW THROUGH CHANNEL ACCESS HATCH AND CONCRETE TOP SHALL BE RATED FOR UNINTENDED H-20 LOADING.
5. HATCH SHALL BE EJ PRODUCT NUMBER H36481993, OR APPROVED EQUAL.
6. HATCH SHALL BE EQUIPPED WITH HYDRAULIC LIFT SPRINGS TO ASSIST WITH OPENING.
7. HATCH SHALL HAVE A RECESSED PADLOCK CLIP FOR LOCKING.
8. ALL HARDWARE AND HINGES SHALL BE SS.
9. OVERSIZE TOP SLAB AS NECESSARY TO PROVIDE CLEARANCE FOR HATCH FRAME.

FLOW THROUGH CHANNEL HATCH DETAIL 5 / C20
SCALE:1/2" = 1'

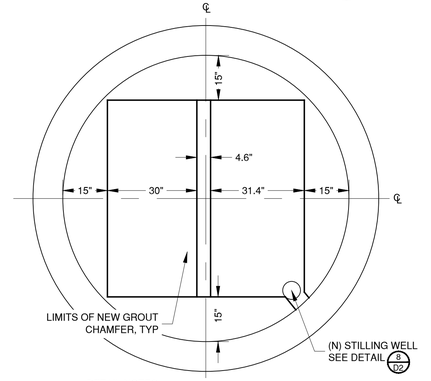

DETAIL NOTES:
1. CHAMFERS AND PUMP PAD SHALL BE CAST AT PRECAST FACILITY.

LIMITS OF CHAMFER DETAIL 3 / C20
SCALE:1/2" = 1'

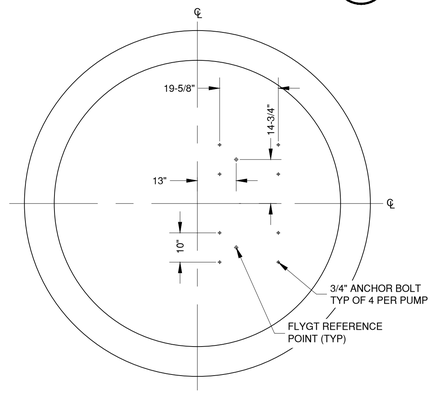

PUMP MOUNTING DETAIL 4 / C20
SCALE:1/2" = 1'

NO	REVISIONS	DATE	APPR
1			
2			
3			
4			
5			
6			

REGISTERED PROFESSIONAL ENGINEER — BRIAN L. SCHAAF — CIVIL — STATE OF CALIFORNIA

Schaaf & Wheeler
CONSULTING CIVIL ENGINEERS
1171 HOMESTEAD RD, STE. 255
SANTA CLARA, CA 95050
(408) 246-4848

CITY OF ALAMEDA
GROUP 4 - SEWERAGE PUMP STATION RENOVATIONS FOR RELIABILITY AND SAFETY IMPROVEMENTS
CATALINA DETAILS

DATE:	11/27/19
SCALE:	AS SHOWN
DESIGN:	CLP
DRAWN:	CLP
CHECKED:	BLS

DWG 9425 CASE 35

C20

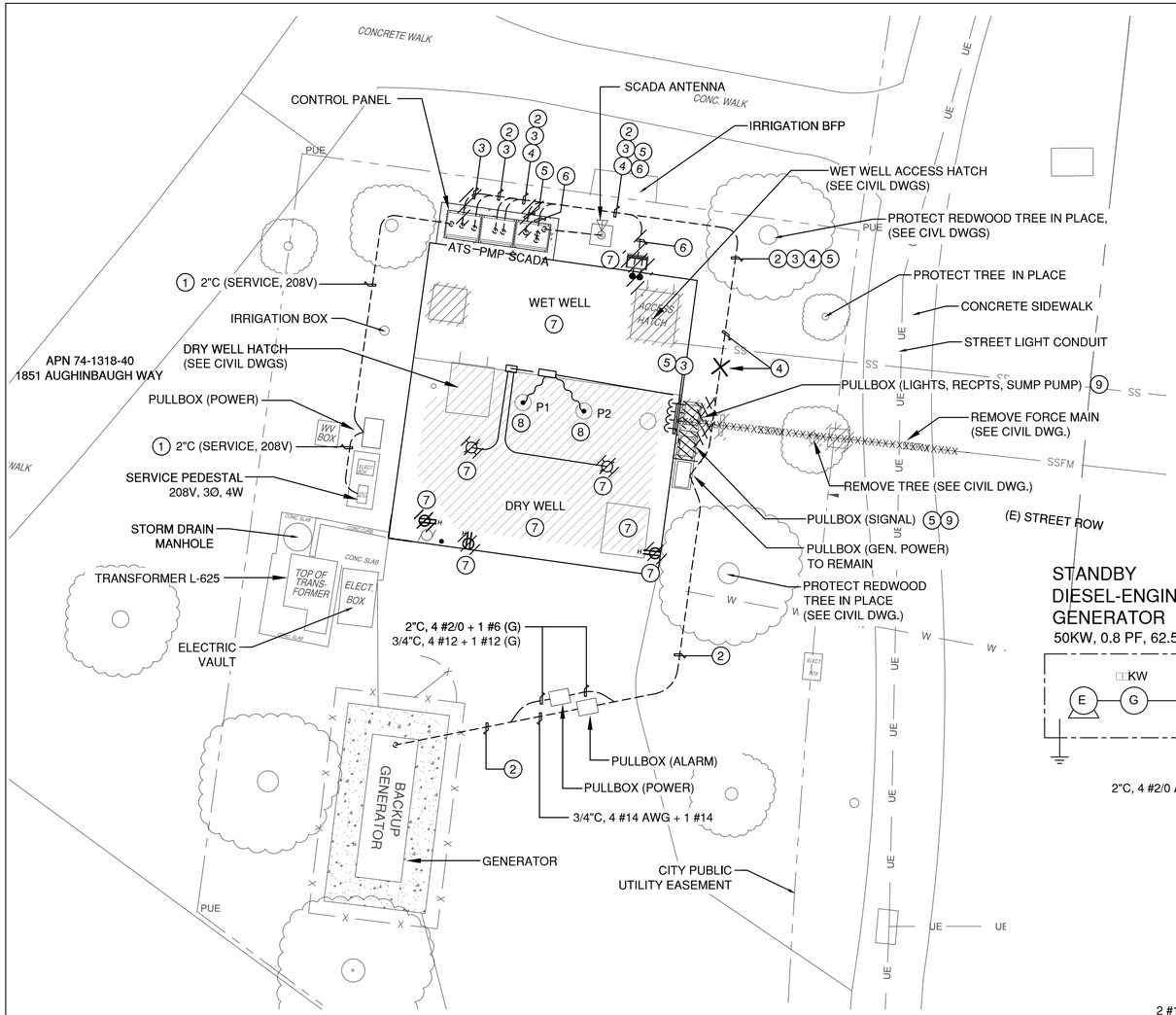

GENERAL NOTES:

1. IT IS THE INTENTION OF THIS PROJECT TO LEAVE THE EXISTING WET WELL AND DRY WELL COMPLETELY CLEAR AND FREE OF ANY AND ALL EXISTING ELECTRICAL APPARATUS THAT IS NOT IN USE OR THAT IS BEING REPLACED BY THIS PROJECT. THIS INCLUDES DEVICES, CONDUIT, BOXES, IN GROUND BOXES SERVING THE WELL BUT LOCATED OUTSIDE THE WELL, AND ANY OTHER SYSTEMS THAT EXIST BUT WILL NOT BE USED OR REPLACED AT THE COMPLETION OF THIS PROJECT WHETHER SHOWN SPECIFICALLY ON THESE PLANS FOR REMOVAL OR NOT.
2. CITY RESERVES THE RIGHT OF REFUSAL ON ANY OF THE EXISTING EQUIPMENT AND DEVICES BEING REMOVED IN THIS PROJECT. ANY EQUIPMENT OR DEVICES NOT WANTED BY THE CITY SHALL BECOME THE PROPERTY OF THE CONTRACTOR AND SHALL BE REMOVED FROM THE PROJECT SITE.

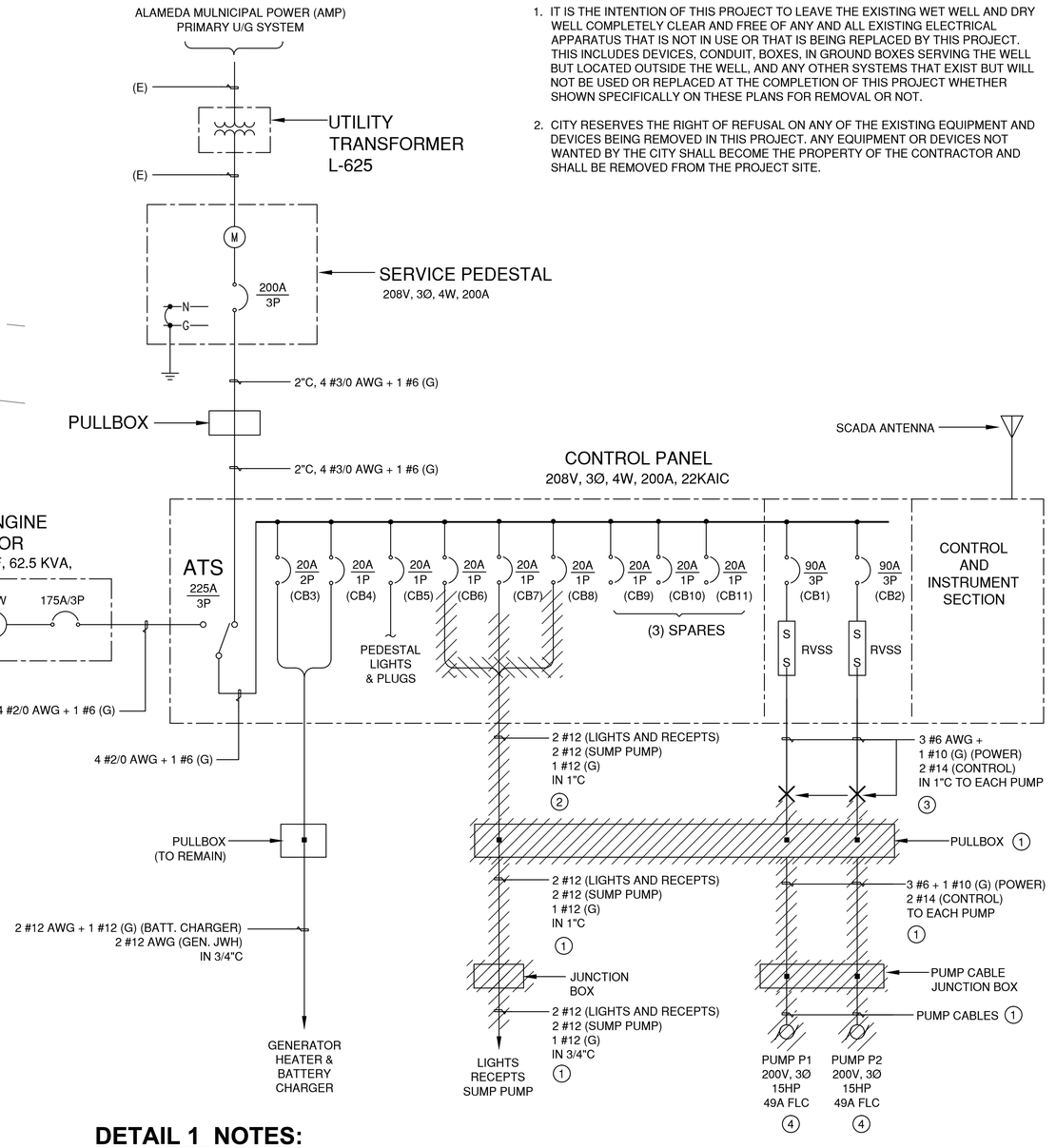

DETAIL 2 NOTES:

1. 2"C, 4 #3/0 AWG + 1 #6 (G) (SERVICE, 208V)
   3/4"C, 2 #14 AWG (SERVICE PEDESTAL INTRUSION ALARM)
2. 2"C, 4 #2/0 AWG + 1 #6 (G) (EMERGENCY POWER)
   3/4"C, 4 #12 AWG + 1 #12 (GEN. BATT. CHRG, GEN. JACKET WATER HEATER)
   3/4"C, 2 #14 AWG (GEN. START SIGNAL)
   2 #14 AWG (GEN. ALARM)
   2 #14 (G)
3. 3/4"C, (LIGHTS, RECEPTS, SUMP PUMP) TO BE REMOVED ALL THE WAY BACK TO THE SOURCE.
4. (2) 1"C, (PUMP P1 AND P2 POWER AND MONITORING) TO REMAIN FOR RE-USE IN THE NEW CONSTRUCTION. REMOVE ALL CONDUCTORS. SEE DWG. E26 FOR NEW WORK REQUIREMENTS.
5. 1"C, 6 #14 (DRYWELL SIGNAL) TO BE REMOVED.
6. 1"C, (PRESSURE LEVEL TRANSMITTER)
   1"C, (FLOAT SWITCHES)
   TO REMAIN. SEE DWG. E26 FOR NEW WORK REQUIREMENTS.
7. REMOVE ALL CONDUIT, JUNCTION BOXES. WIRING AND DEVICES INCLUDING INTRUSION DETECTORS, LIGHTS, RECEPTACLES, CONTROLS, LEVEL PRESSURE LEVEL TRANSMITTER , AND FLOAT SWITCHES THAT MAY EXIST FROM WET WELL. SEAL OFF ALL OPENINGS TO EXTERIOR.
8. DISCONNECT AND REMOVE PUMP. RETAIN FOR RE-USE IN THE NEW CONSTRUCTION. SEE DWG. E26 FOR NEW WORK INSTALLATION.
9. REMOVE ELECTRICAL EQUIPMENT.

DETAIL 1 NOTES:

1. REMOVE ALL CONDUIT, PUMP CABLES, JUNCTION BOXES. WIRING AND DEVICES INCLUDING INTRUSION DETECTORS, LIGHTS, RECEPTACLES, CONTROLS, LEVEL PRESSURE TRANSMITTER , AND FLOAT SWITCHES THAT MAY EXIST FROM DRYWELL AND WET WELL. SEAL OFF ALL OPENINGS TO EXTERIOR.
2. 1"C, (LIGHTS, RECEPTS, SUMP PUMP) TO BE REMOVED ALL THE WAY BACK TO THE SOURCE.
3. (2) 1"C, (PUMP P1 AND P2 POWER AND MONITORING) TO REMAIN FOR RE-USE IN THE NEW CONSTRUCTION. REMOVE ALL CONDUCTORS. SEE DWG. E26 FOR NEW WORK REQUIREMENTS.
4. DISCONNECT AND REMOVE PUMP. RETAIN FOR RE-USE IN THE NEW CONSTRUCTION. SEE DWG. E26 FOR NEW WORK INSTALLATION.

2 CATALINA SITE PLAN
SCALE: 1" = 5'-0"

0 5' 10' 15'
SCALE: 1" = 5'-0"

1 CATALINA ONE-LINE DIAGRAM
SCHEMATIC

NO	REVISIONS	DATE	APPR
1			
2			
3			
4			
5			
6			
7			

NBS engineers, inc.
3350 scott blvd., bldg. 11
santa clara, ca. 95054
(408) 986-8558
FAX (408) 986-9627
PROJECT NO. 18697-06

REGISTERED PROFESSIONAL ENGINEER
JULIO C. HERDOCIA
No. 9580
EXP. 9/30/20
ELECTRICAL
STATE OF CALIFORNIA

CITY OF ALAMEDA
GROUP 4 - SEWERAGE PUMP STATION RENOVATIONS
FOR RELIABILITY AND SAFETY IMPROVEMENTS
CATALINA PUMP STATION
ONE-LINE & SITE PLAN - REMOVAL WORK

DATE:	11/27/19
SCALE:	AS SHOWN
DESIGN:	JCH
DRAWN:	VDM
CHECKED:	JCH

DWG 9425 CASE 35

E25

47 OF 70

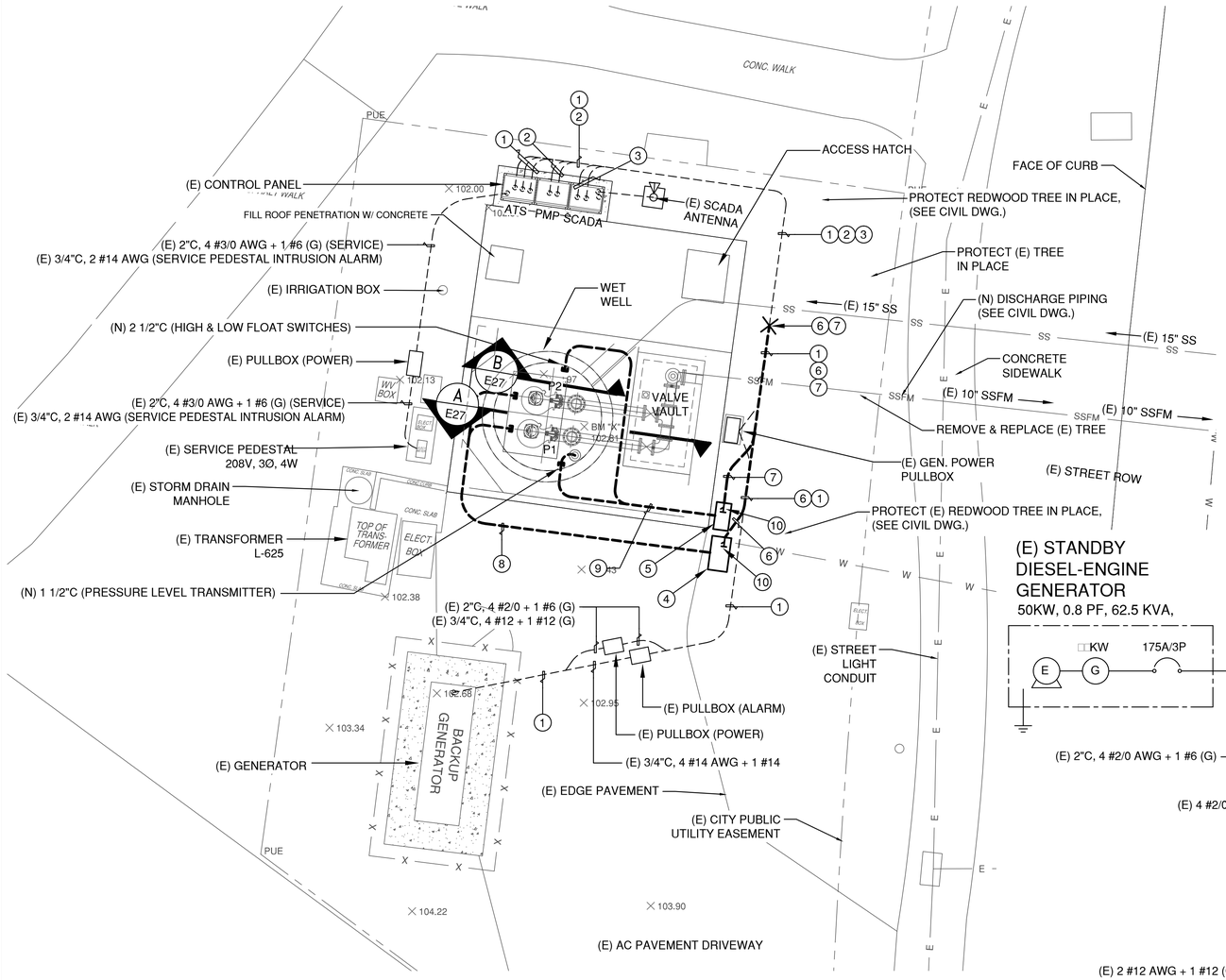

DETAIL 2 NOTES:

1. (E) 2"C, 4 #2/0 AWG + 1 #6 (G) (EMERGENCY POWER)
   (E) 3/4"C, 4 #12 AWG + 1 #12 (GEN. BATT. CHRG, GEN. JACKET WATER HEATER)
   (E) 3/4"C, 2 #14 AWG (GEN. START SIGNAL)
   2 #14 AWG (GEN. ALARM)
   1 #14 AWG (G)
2. (E) (2) 1"C, (PUMP P1 AND P2 POWER AND MONITORING) SEE ONE-LINE DIAGRAM FOR CABLE SIZES.
3. (E) 1"C WITH (N) PRESSURE LEVEL TRANSMITTER CABLE. (E) 1"C WITH (N) HIGH AND LOW FLOAT CABLES.
4. PROVIDE IN GROUND PULL BOX FOR PUMP POWER AND MONITORING CONTROL CIRCUITS, SIZE 6T, CHRISTY B1730 WITH 12" EXTENSION (17" x 30") REINFORCED TRAFFIC RATED CONCRETE BOX WITH BOLT DOWN, STEEL CHECKER PLATED COVER.
5. PROVIDE IN GROUND PULL BOX FOR CONTROLS, SIZE 5T, CHRISTY B1324 WITH 12" EXTENSION (13" x 24") REINFORCED TRAFFIC RATED CONCRETE BOX WITH BOLT DOWN, STEEL CHECKER PLATED COVER.
6. EXTEND (2) 1"C FOR PUMP POWER, MOISTURE AND TEMPERATURE MONITORING CONTROL CIRCUITS FOR WET WELL PUMPS. CONTRACTOR TO MATCH EXISTING CONDUIT MATERIAL. SEE ONE-LINE DIAGRAM FOR CABLE SIZES.
7. EXTEND (2) 1"C FOR PRESSURE LEVEL TRANSMITTER AND HIGH AND LOW FLOAT CABLES TO CONTROL PULLBOX. CONTRACTOR TO MATCH EXISTING CONDUIT MATERIAL.
8. PROVIDE (2) 2 1/2" PVC COATED RSC CONDUIT FOR PUMP POWER CABLING.
9. PROVIDE (1) 1 1/2" PVC COATED RSC CONDUIT FOR PRESSURE LEVEL TRANSMITTER CABLE. PROVIDE (1) 1 1/2" PVC COATED RSC CONDUIT FOR HIGH AND LOW FLOAT CABLES.
10. PROVIDE CLASS I, DIV. 1 SEALING FITTING FOR ALL CONDUITS LEAVING THIS PULLBOX TOWARDS THE MOTOR CONTROL CENTER (MCC). SEE DWG. E-37 FOR PULLBOX DETAILS.

DETAIL 1 NOTES:

1. PROVIDE IN GROUND PULL BOX FOR PUMP POWER AND MONITORING CONTROL CIRCUITS, SIZE 6T, CHRISTY B1730 WITH 12" EXTENSION (17" x 30") REINFORCED TRAFFIC RATED CONCRETE BOX WITH BOLT DOWN, STEEL CHECKER PLATED COVER.
2. EXTEND (2) 1"C FOR PUMP POWER, MOISTURE AND TEMPERATURE MONITORING CONTROL CIRCUITS TO PUMP POWER PULLBOX FOR WET WELL PUMPS. CONTRACTOR TO MATCH EXISTING CONDUIT MATERIAL. SEE ONE-LINE DIAGRAM FOR CABLE SIZES.

2 — CATALINA SITE PLAN
SCALE: 1" = 5'-0"

0 5' 10' 15'
SCALE: 1" = 5'-0"

1 — CATALINA ONE-LINE DIAGRAM
SCHEMATIC

NO	DATE	APPR	REVISIONS
1			
2			
3			
4			
5			
6			
7			

PROFESSIONAL ENGINEER — C. HERBOCIA — No. 9580 — 9/30/20 — ELECTRICAL — STATE OF CALIFORNIA

engineers, inc.
3350 scott blvd., bldg. 11
santa clara, ca. 95054
(408) 986-8558
FAX (408) 986-9627
PROJECT NO. 18697-06

CITY OF ALAMEDA
GROUP 4 - SEWERAGE PUMP STATION RENOVATIONS
FOR RELIABILITY AND SAFETY IMPROVEMENTS
CATALINA PUMP STATION
ONE-LINE & SITE PLAN - NEW WORK

DATE:	11/27/19
SCALE:	AS SHOWN
DESIGN:	JCH
DRAWN:	VDM
CHECKED:	JCH

DWG 9425 CASE 35

E26

48 OF 70

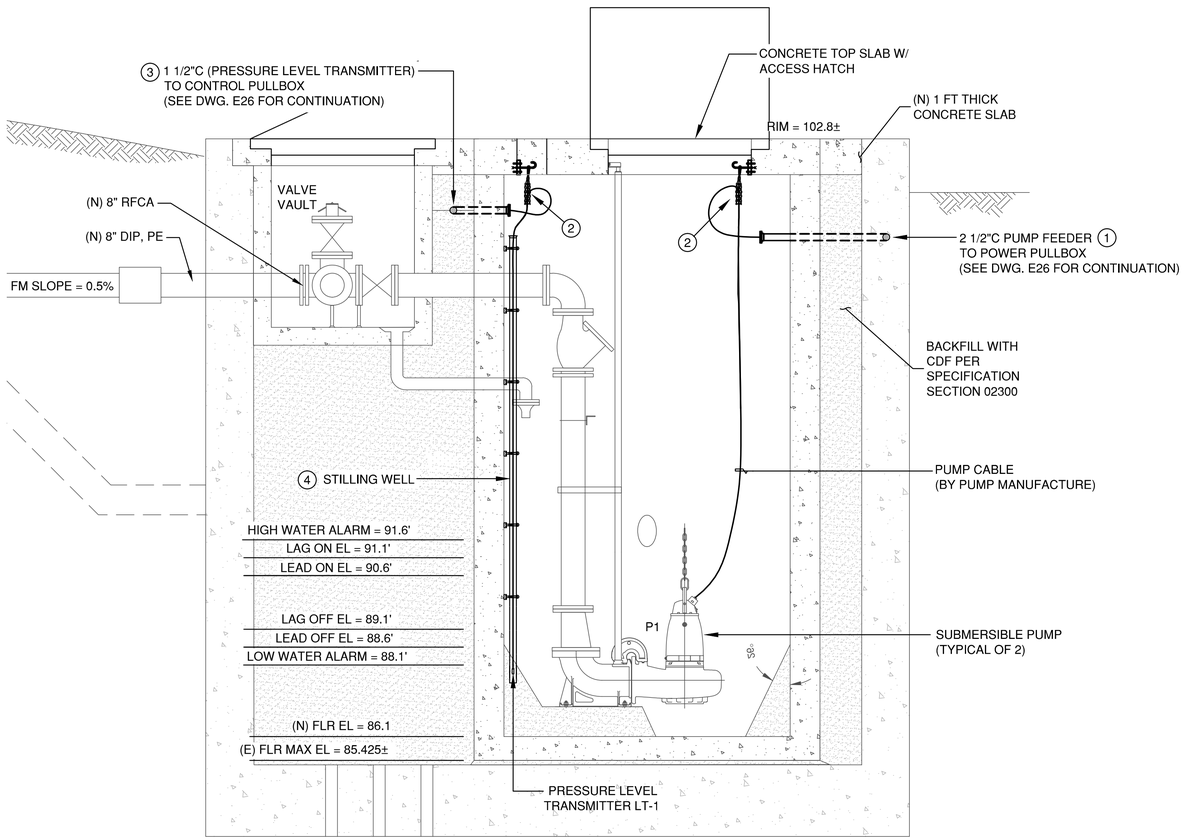

A — WET WELL ELEVATION
SCALE: 1/2" = 1'-0"

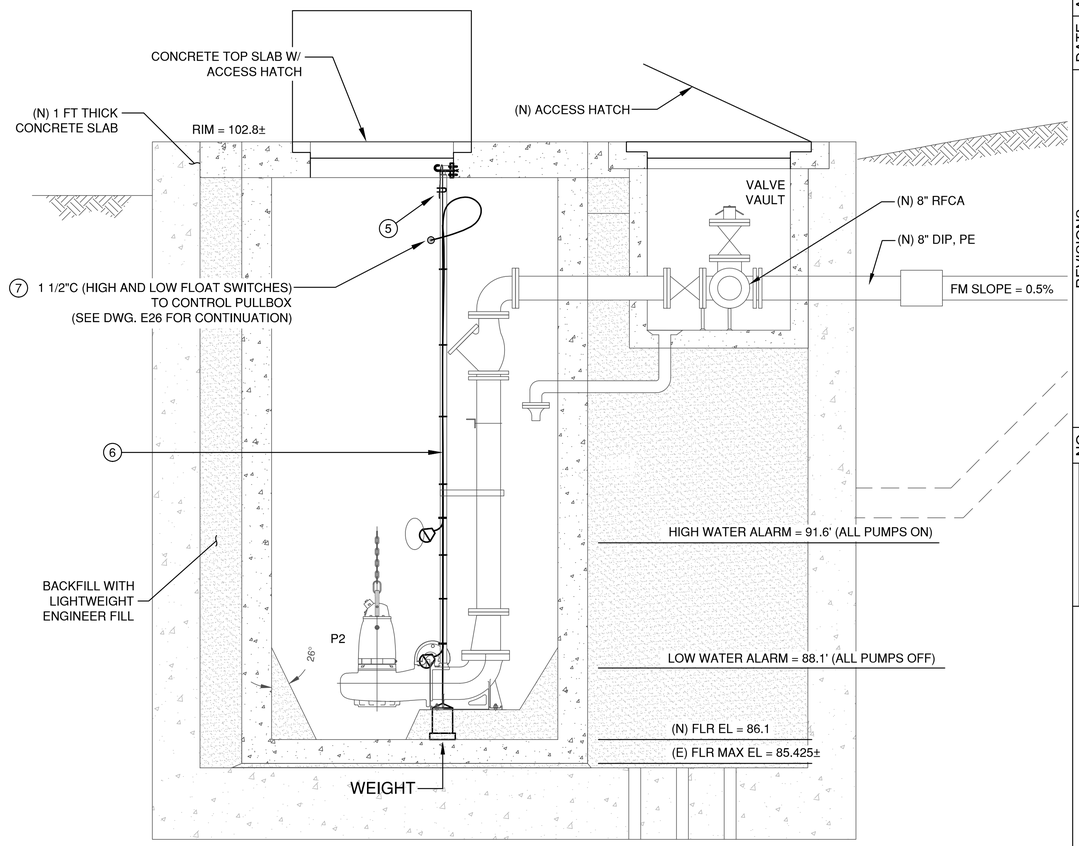

B — WET WELL ELEVATION
SCALE: 1/2" = 1'-0"

SHEET NOTES:

1. (1) 2 1/2"C (PUMP FEEDER CABLE).
   INSTALL INSULATED BUSHING AT WET WELL END AND INSULATED GROUNDING BUSHING AT THE POWER PULLBOX. DUCT SEAL BOTH ENDS AFTER CABLE INSTALLATION
2. STAINLESS STEEL HOOK, STAINLESS STEEL CHANNEL, STAINLESS STEEL ANCHOR BOLTS, AND STAINLESS STEEL CABLE GRIP (CABLE HANGER FOR PRESSURE LEVEL TRANSMITTER).
3. (1) 1 1/2"C (PRESSURE LEVEL TRANSMITTER LT-1).
   INSTALL INSULATED BUSHING AT WET WELL END AND INSULATED GROUNDING BUSHING AT THE CONTROL PULLBOX. DUCT SEAL BOTH END AFTER CABLE INSTALLATION
4. PRESSURE LEVEL TRANSMITTER INSIDE STILLING WELL. SEE CIVIL DWG. D2, DETAIL 8. ADJUST CHAMFER PER CIVIL DRAWINGS.
5. STAINLESS STEEL HOOK, STAINLESS STEEL CHANNEL, STAINLESS STEEL ACHOR BOLT, STAINLESS STEEL THIMBLE, STAINLESS STEEL CABLE CLAMPS, AND PVC COATED 15-POUND WEIGHT.
6. 1/4" DIA. STAINLESS STEEL CABLE WITH FLOAT SWITCH CABLES. TIE WRAP WITH HEAVY PLASTIC TIE AT EVERY 2 FT.
7. (1) 1 1/2"C (FLOAT SWITCHES).
   INSTALL INSULATED BUSHING AT WET WELL END AND INSULATED GROUNDING BUSHING AT THE CONTROL PULLBOX. DUCT SEAL BOTH END AFTER CABLE INSTALLATION

NO	REVISIONS	DATE	APPR
1			
2			
3			
4			
5			
6			
7			

PROFESSIONAL ENGINEER — REGISTERED — JULIO C. HERDOCIA — No. 9580 — 9/30/20 — ELECTRICAL — STATE OF CALIFORNIA

engineers, inc.
3350 scott blvd., bldg. 11
santa clara, ca. 95054
(408) 986-8558
FAX (408) 986-9627
PROJECT NO. 18697-06

CITY OF ALAMEDA
GROUP 4 - SEWERAGE PUMP STATION RENOVATIONS FOR RELIABILITY AND SAFETY IMPROVEMENTS
CATALINA PUMP STATION
WET WELL ELEVATIONS

DATE:	11/27/19
SCALE:	AS SHOWN
DESIGN:	JCH
DRAWN:	VDM
CHECKED:	JCH

DWG 9425 CASE 35

E27

49 OF 70

File: M:\18697-06 Alameda Pumps - Group 4\47_CAL_E27.dwg, 11/27/2019 2:59 PM, Last saved: Vuong, PlotDate: 11/27/2019 3:44 PM By: Vuong Moi, Plot scale: 1:2.5849, Plot Size: ANSI A (8.50 x 11.00 Inches)
Xrefs: SHEET_S&W_Group-4 SHEET 03 04 CATALINA_REVISED_072319

#10 HARBOR BAY PARKWAY 1 PUMP STATION

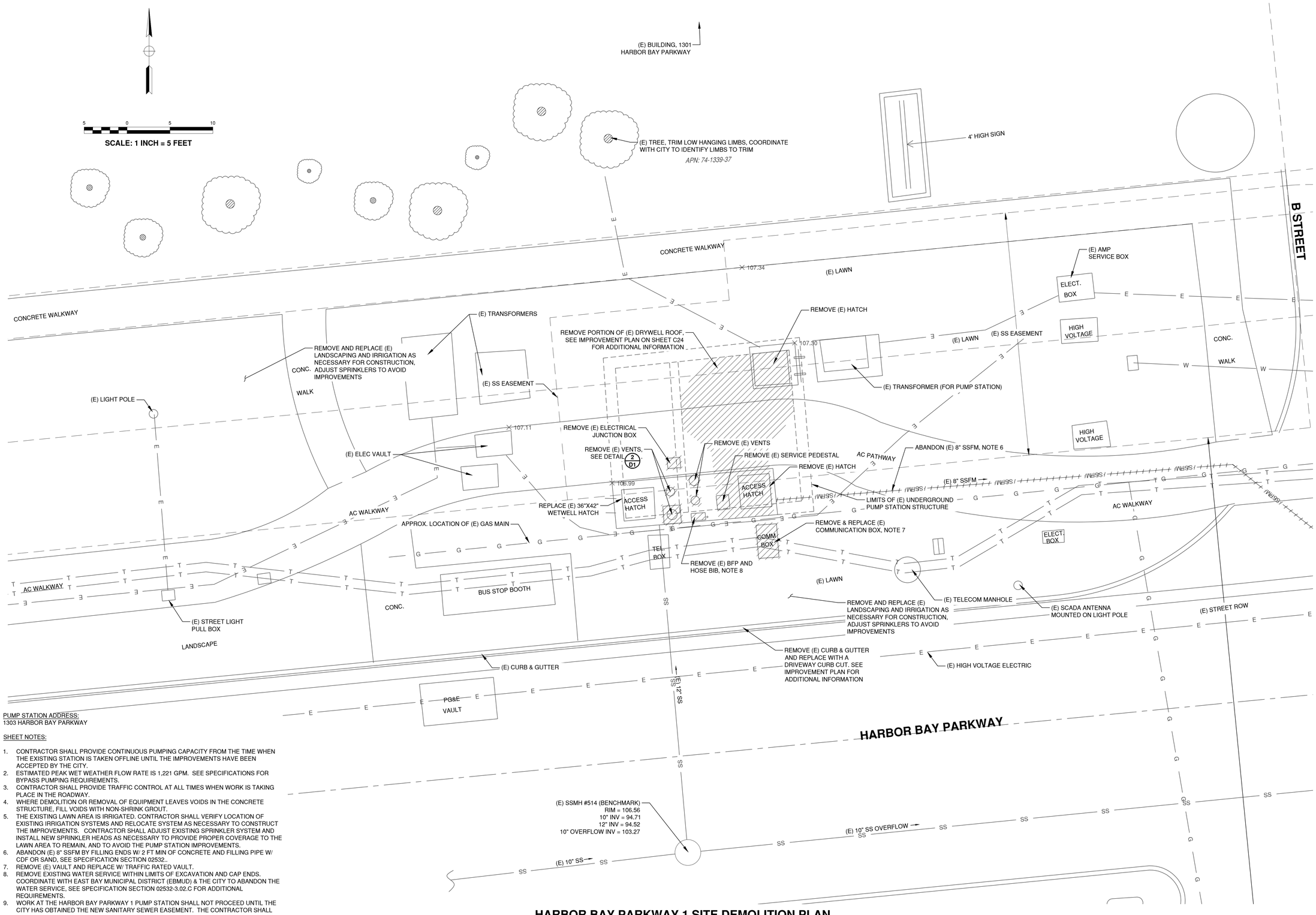

PUMP STATION ADDRESS:
1303 HARBOR BAY PARKWAY

SHEET NOTES:

1. CONTRACTOR SHALL PROVIDE CONTINUOUS PUMPING CAPACITY FROM THE TIME WHEN THE EXISTING STATION IS TAKEN OFFLINE UNTIL THE IMPROVEMENTS HAVE BEEN ACCEPTED BY THE CITY.
2. ESTIMATED PEAK WET WEATHER FLOW RATE IS 1,221 GPM. SEE SPECIFICATIONS FOR BYPASS PUMPING REQUIREMENTS.
3. CONTRACTOR SHALL PROVIDE TRAFFIC CONTROL AT ALL TIMES WHEN WORK IS TAKING PLACE IN THE ROADWAY.
4. WHERE DEMOLITION OR REMOVAL OF EQUIPMENT LEAVES VOIDS IN THE CONCRETE STRUCTURE, FILL VOIDS WITH NON-SHRINK GROUT.
5. THE EXISTING LAWN AREA IS IRRIGATED. CONTRACTOR SHALL VERIFY LOCATION OF EXISTING IRRIGATION SYSTEMS AND RELOCATE SYSTEM AS NECESSARY TO CONSTRUCT THE IMPROVEMENTS. CONTRACTOR SHALL ADJUST EXISTING SPRINKLER SYSTEM AND INSTALL NEW SPRINKLER HEADS AS NECESSARY TO PROVIDE PROPER COVERAGE TO THE LAWN AREA TO REMAIN, AND TO AVOID THE PUMP STATION IMPROVEMENTS.
6. ABANDON (E) 8" SSFM BY FILLING ENDS W/ 2 FT MIN OF CONCRETE AND FILLING PIPE W/ CDF OR SAND, SEE SPECIFICATION SECTION 02532..
7. REMOVE (E) VAULT AND REPLACE W/ TRAFFIC RATED VAULT.
8. REMOVE EXISTING WATER SERVICE WITHIN LIMITS OF EXCAVATION AND CAP ENDS. COORDINATE WITH EAST BAY MUNICIPAL DISTRICT (EBMUD) & THE CITY TO ABANDON THE WATER SERVICE, SEE SPECIFICATION SECTION 02532-3.02.C FOR ADDITIONAL REQUIREMENTS.
9. WORK AT THE HARBOR BAY PARKWAY 1 PUMP STATION SHALL NOT PROCEED UNTIL THE CITY HAS OBTAINED THE NEW SANITARY SEWER EASEMENT. THE CONTRACTOR SHALL SEQUENCE THE WORK AS NECESSARY TO ACCOMMODATE THE EASEMENT ACQUISITION.
10. SEE ELECTRICAL SHEETS FOR ADDITIONAL PUMP STATION IMPROVEMENTS.

HARBOR BAY PARKWAY 1 SITE DEMOLITION PLAN

SCALE: 1" = 5'

NO	REVISIONS	DATE	APPR
1			
2			
3			
4			
5			
6			

Schaaf & Wheeler
CONSULTING CIVIL ENGINEERS
1171 HOMESTEAD RD, STE. 255
SANTA CLARA, CA 95050
(408) 246-4848

CITY OF ALAMEDA
GROUP 4 - SEWERAGE PUMP STATION RENOVATIONS FOR RELIABILITY AND SAFETY IMPROVEMENTS
HARBOR BAY PARKWAY 1 SITE
DEMOLITION PLAN

DATE:	11/27/19
SCALE:	AS SHOWN
DESIGN:	CLP
DRAWN:	CLP
CHECKED:	BLS

DWG 9425 CASE 35

C21

50 OF 70

#10 HARBOR BAY PARKWAY 1 PUMP STATION

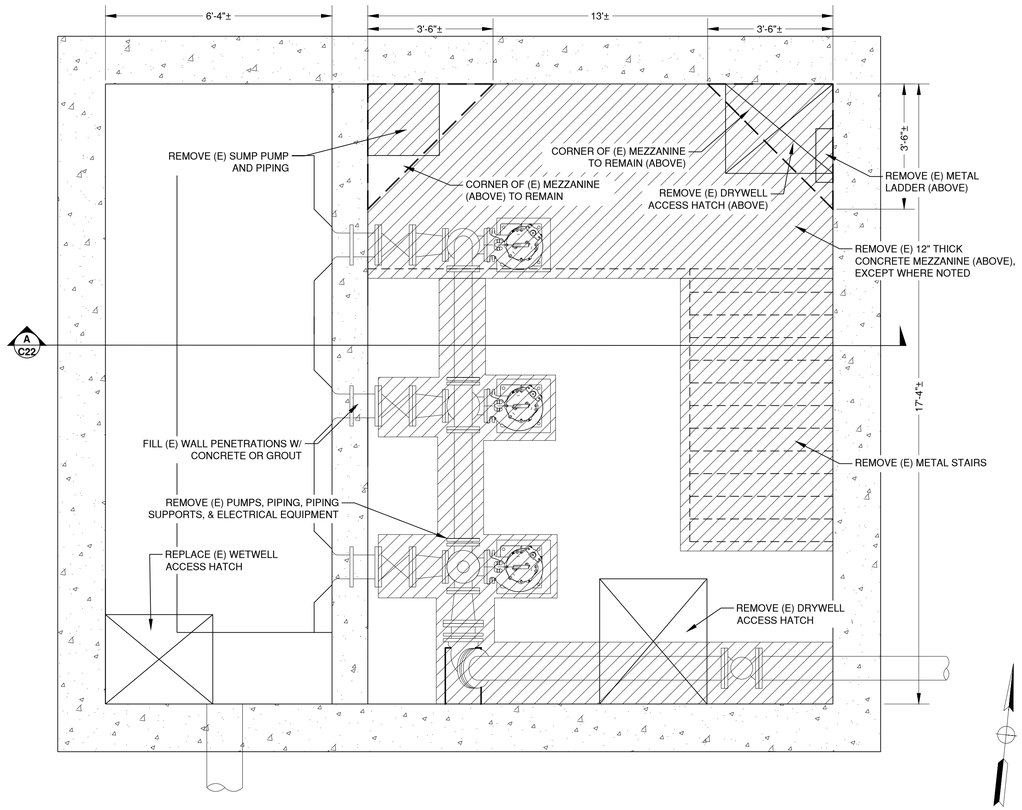

DEMOLITION PLAN

SCALE:1/2" = 1'

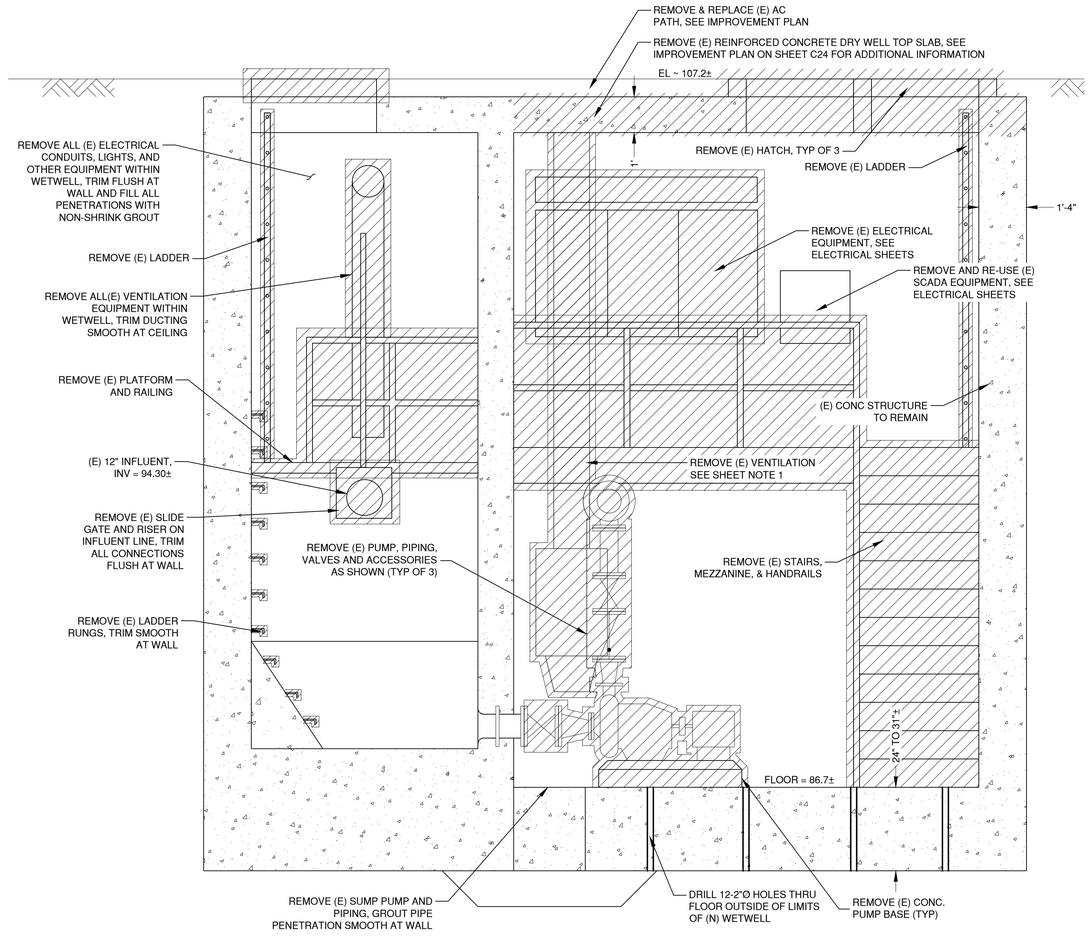

DEMOLITION SECTION A C22

SCALE:1/2" = 1'

SHEET NOTES:

1. REMOVE NON-WROKING VENTILATION FANS AND DUCTING. TRIM DUCTING FLUSH AT PS CEILING. EXTERIOR RAIN HOODS AND DUCTING SHALL REMAIN UNLESS OTHERWISE NOTED.

NO	REVISIONS	DATE	APPR
1			
2			
3			
4			
5			
6			

REGISTERED PROFESSIONAL ENGINEER — BRIAN L. SCHICK — No. 55555 — CIVIL — STATE OF CALIFORNIA

Schaaf & Wheeler
CONSULTING CIVIL ENGINEERS
1171 HOMESTEAD RD, STE. 255
SANTA CLARA, CA 95050
(408) 246-4848

CITY OF ALAMEDA
GROUP 4 - SEWERAGE PUMP STATION RENOVATIONS FOR RELIABILITY AND SAFETY IMPROVEMENTS
HARBOR BAY PARKWAY 1
DEMOLITION PLAN & SECTION

DATE:	11/27/19
SCALE:	AS SHOWN
DESIGN:	CLP
DRAWN:	CLP
CHECKED:	BLS

DWG 9425 CASE 35

C22

#10 HARBOR BAY PARKWAY 1 PUMP STATION

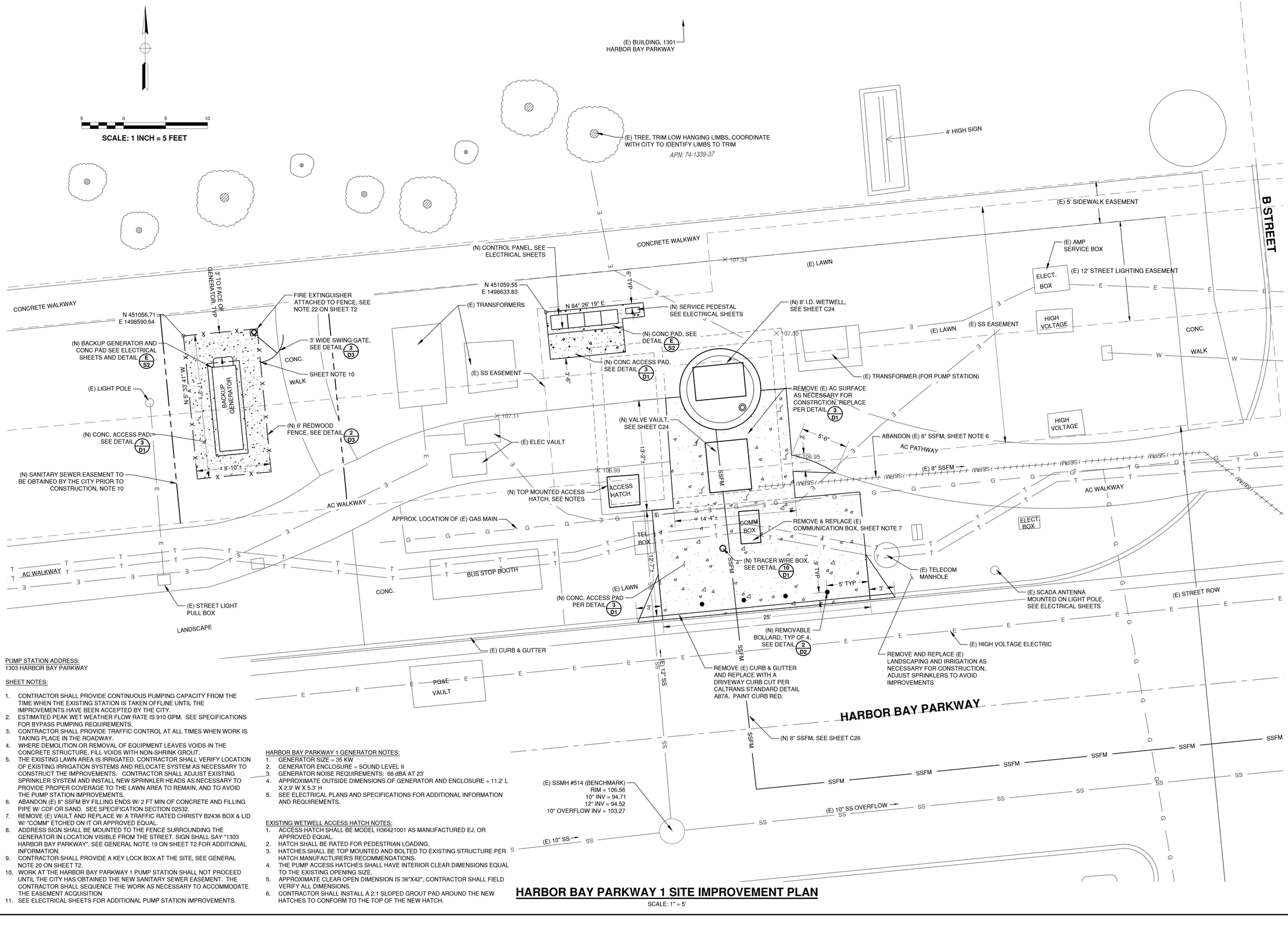

PUMP STATION ADDRESS:
1303 HARBOR BAY PARKWAY

SHEET NOTES:

1. CONTRACTOR SHALL PROVIDE CONTINUOUS PUMPING CAPACITY FROM THE TIME WHEN THE EXISTING STATION IS TAKEN OFFLINE UNTIL THE IMPROVEMENTS HAVE BEEN ACCEPTED BY THE CITY.
2. ESTIMATED PEAK WET WEATHER FLOW RATE IS 910 GPM. SEE SPECIFICATIONS FOR BYPASS PUMPING REQUIREMENTS.
3. CONTRACTOR SHALL PROVIDE TRAFFIC CONTROL AT ALL TIMES WHEN WORK IS TAKING PLACE IN THE ROADWAY.
4. WHERE DEMOLITION OR REMOVAL OF EQUIPMENT LEAVES VOIDS IN THE CONCRETE STRUCTURE, FILL VOIDS WITH NON-SHRINK GROUT.
5. THE EXISTING LAWN AREA IS IRRIGATED. CONTRACTOR SHALL VERIFY LOCATION OF EXISTING IRRIGATION SYSTEMS AND RELOCATE SYSTEM AS NECESSARY TO CONSTRUCT THE IMPROVEMENTS. CONTRACTOR SHALL ADJUST EXISTING SPRINKLER SYSTEM AND INSTALL NEW SPRINKLER HEADS AS NECESSARY TO PROVIDE PROPER COVERAGE TO THE LAWN AREA TO REMAIN, AND TO AVOID THE PUMP STATION IMPROVEMENTS.
6. ABANDON (E) 8" SSFM BY FILLING ENDS W/ 2 FT MIN OF CONCRETE AND FILLING PIPE W/ CDF OR SAND. SEE SPECIFICATION SECTION 02532.
7. REMOVE (E) VAULT AND REPLACE W/ A TRAFFIC RATED CHRISTY B2436 BOX & LID W/ "COMM" ETCHED ON IT OR APPROVED EQUAL.
8. ADDRESS SIGN SHALL BE MOUNTED TO THE FENCE SURROUNDING THE GENERATOR IN LOCATION VISIBLE FROM THE STREET. SIGN SHALL SAY "1303 HARBOR BAY PARKWAY". SEE GENERAL NOTE 19 ON SHEET T2 FOR ADDITIONAL INFORMATION.
9. CONTRACTOR SHALL PROVIDE A KEY LOCK BOX AT THE SITE, SEE GENERAL NOTE 20 ON SHEET T2.
10. WORK AT THE HARBOR BAY PARKWAY 1 PUMP STATION SHALL NOT PROCEED UNTIL THE CITY HAS OBTAINED THE NEW SANITARY SEWER EASEMENT. THE CONTRACTOR SHALL SEQUENCE THE WORK AS NECESSARY TO ACCOMMODATE THE EASEMENT ACQUISITION
11. SEE ELECTRICAL SHEETS FOR ADDITIONAL PUMP STATION IMPROVEMENTS.

HARBOR BAY PARKWAY 1 GENERATOR NOTES:

1. GENERATOR SIZE = 35 KW
2. GENERATOR ENCLOSURE = SOUND LEVEL II
3. GENERATOR NOISE REQUIREMENTS: 68 dBA AT 23'
4. APPROXIMATE OUTSIDE DIMENSIONS OF GENERATOR AND ENCLOSURE = 11.2' L X 2.9' W X 5.3' H
5. SEE ELECTRICAL PLANS AND SPECIFICATIONS FOR ADDITIONAL INFORMATION AND REQUIREMENTS.

EXISTING WETWELL ACCESS HATCH NOTES:

1. ACCESS HATCH SHALL BE MODEL H36421001 AS MANUFACTURED EJ, OR APPROVED EQUAL.
2. HATCH SHALL BE RATED FOR PEDESTRIAN LOADING.
3. HATCHES SHALL BE TOP MOUNTED AND BOLTED TO EXISTING STRUCTURE PER HATCH MANUFACTURER'S RECOMMENDATIONS.
4. THE PUMP ACCESS HATCHES SHALL HAVE INTERIOR CLEAR DIMENSIONS EQUAL TO THE EXISTING OPENING SIZE.
5. APPROXIMATE CLEAR OPEN DIMENSION IS 36"X42", CONTRACTOR SHALL FIELD VERIFY ALL DIMENSIONS.
6. CONTRACTOR SHALL INSTALL A 2:1 SLOPED GROUT PAD AROUND THE NEW HATCHES TO CONFORM TO THE TOP OF THE NEW HATCH.

HARBOR BAY PARKWAY 1 SITE IMPROVEMENT PLAN

SCALE: 1" = 5'

NO	REVISIONS	DATE	APPR
1			
2			
3			
4			
5			
6			

Schaaf & Wheeler
CONSULTING CIVIL ENGINEERS
1171 HOMESTEAD RD, STE. 255
SANTA CLARA, CA 95050
(408) 246-4848

CITY OF ALAMEDA
GROUP 4 - SEWERAGE PUMP STATION RENOVATIONS FOR RELIABILITY AND SAFETY IMPROVEMENTS
HARBOR BAY PARKWAY 1 SITE IMPROVEMENT PLAN

DATE:	11/27/19	
SCALE:	AS SHOWN	
DESIGN:	CLP	
DRAWN:	CLP	
CHECKED:	BLS	

DWG 9425 CASE 35

C23

52 OF 70

#10 HARBOR BAY PARKWAY 1 PUMP STATION

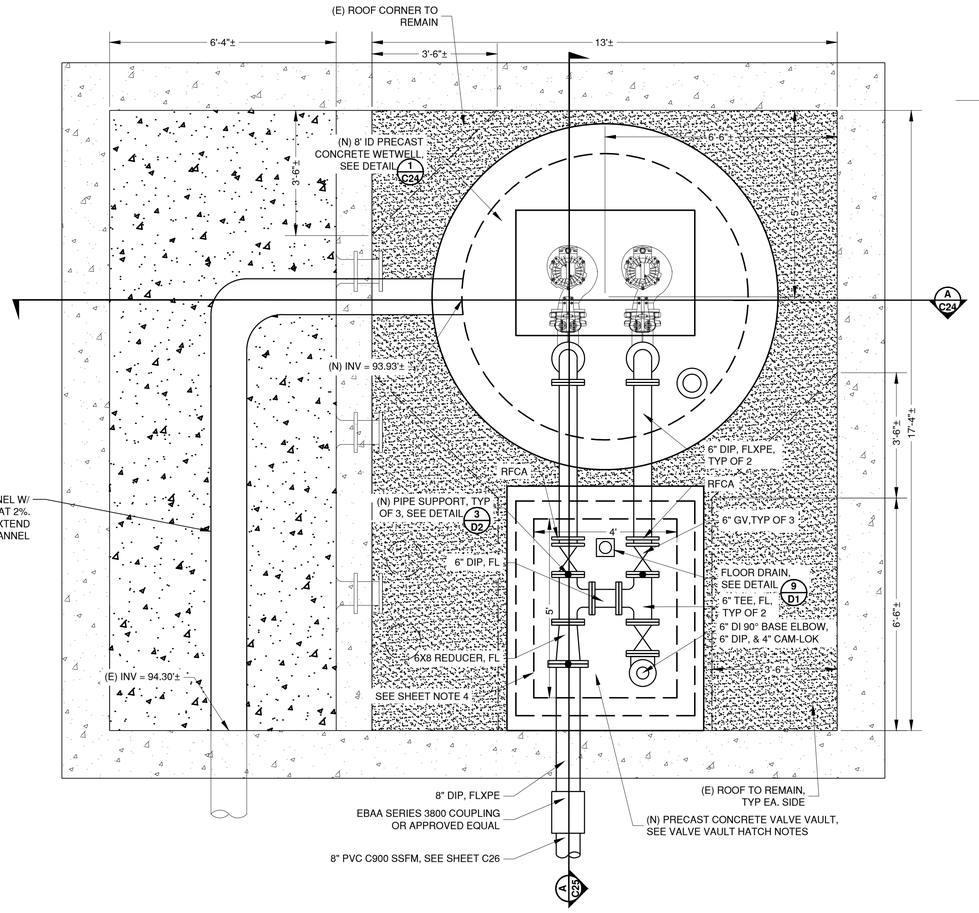

IMPROVEMENT PLAN

SCALE:1/2" = 1'

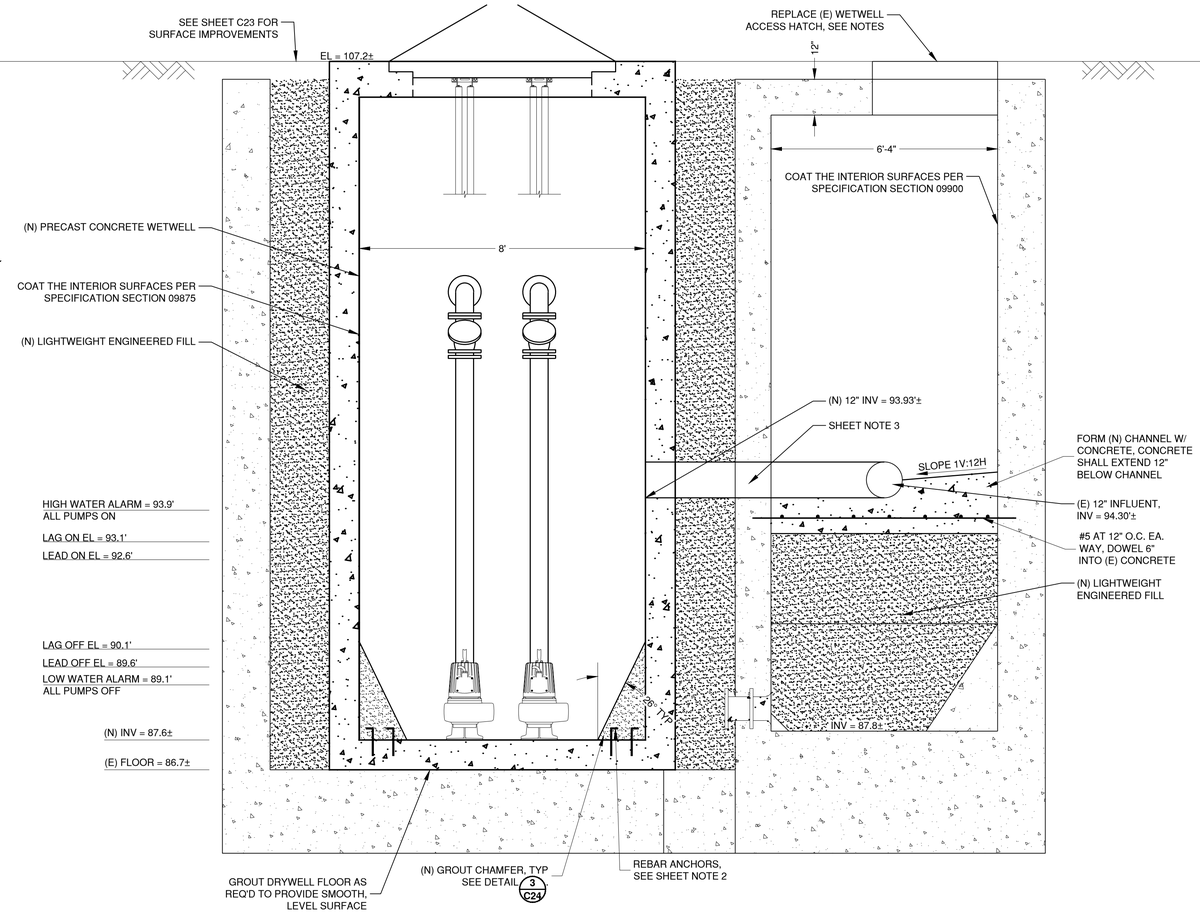

IMPROVEMENT SECTION A C24

SCALE:1/2" = 1'

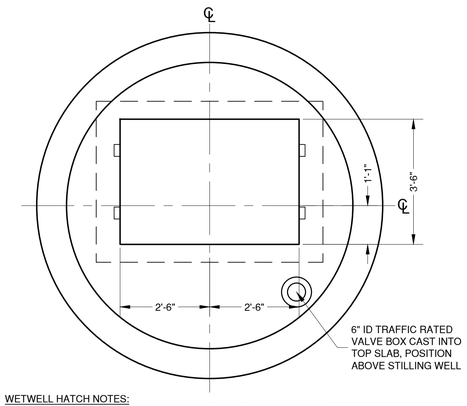

WETWELL HATCH NOTES:

1. ACCESS HATCH DIMENSIONS SHOWN ARE CLEAR OPENINGS.
2. ACCESS HATCH SHALL BE EQUIPPED WITH INTEGRAL FALL PROTECTION. CONTRACTOR SHALL COORDINATE INSTALLATION WITH WETWELL COATING AND ENSURE PROPER INSTALLATION.
3. TOP OF HATCH SHALL BE 1/4" DIAMOND PLATE
4. WETWELL ACCESS HATCH AND CONCRETE TOP SHALL BE RATED FOR UNINTENDED H-20 LOADING.
5. HATCH SHALL BE EJ PRODUCT NUMBER H42601991, OR APPROVED EQUAL.
6. HATCH SHALL BE EQUIPPED WITH HYDRAULIC LIFT SPRINGS TO ASSIST WITH OPENING.
7. HATCH SHALL HAVE A RECESSED PADLOCK CLIP FOR LOCKING
8. ALL HARDWARE AND HINGES SHALL BE SS

WETWELL HATCH DETAIL 1 C24

SCALE: 1/2" = 1'

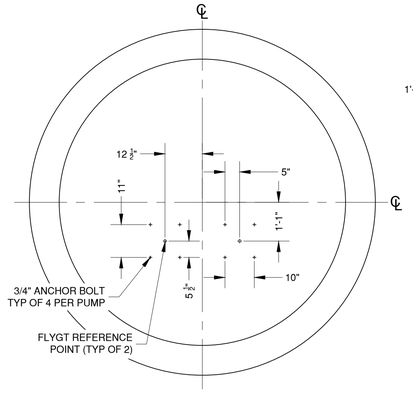

PUMP MOUNTING DETAIL 2 C24

SCALE: 1/2" = 1'

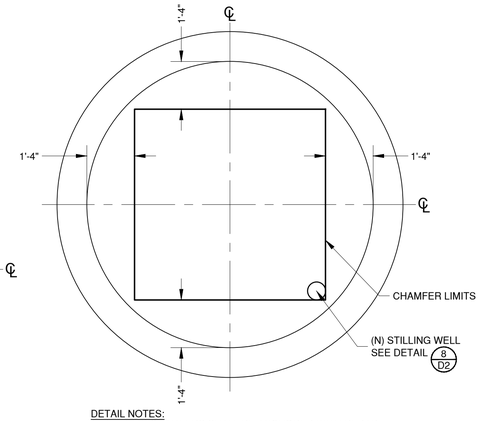

DETAIL NOTES:

1. ALL NEW CHAMFERS SHALL BE ANCHORED WITH REBAR. REBAR ANCHORS SHALL BE #5 BARS 12" LONG DRILLED AND EPOXIED 3" INTO CONCRETE. SPACE ANCHORS AT 9" MAX O.C. AND PROVIDE 2" MIN. CLEARANCE TO LIMIT OF GROUT.

WETWELL CHAMFER DETAIL 3 C24

SCALE: 1/2" = 1'

HARBOR BAY PARKWAY 1 PUMP NOTES:

PUMP SHALL BE AN INDUSTRIAL SEWAGE PUMP, RATED FOR USE IN CLASS 1, DIVISION 1, GROUP D LOCATIONS. PUMP SHALL BE SUPPLIED WITH INTEGRAL MOISTURE AND TEMPERATURE SENSORS. PUMP SHALL BE FLYGT NP 3127 LT WITH AN ADAPTIVE IMPELLER AND THE FOLLOWING CHARACTERISTICS (SEE THE TECHNICAL SPECIFICATIONS FOR ADDITIONAL REQUIREMENTS):

VOLTAGE: 200V, AC, 60 HZ
PHASES: THREE (3)
HORSEPOWER: 10
IMPELLER DIAMETER: 7.72 INCHES (196 MM)
IMPELLER TYPE: ADAPTIVE, HARD IRON™
RATING POINT: 1009 GPM AT 27 FEET OF HEAD
DISCHARGE SIZE: 5 7/8 INCHES

THE CITY HAS STANDARDIZED THE PUMP MANUFACTURER, NO SUBSTITUTIONS WILL BE ACCEPTED.

VALVE VAULT HATCH NOTES:

1. VALVE VAULT SHALL HAVE 4'X5' INTERIOR DIMENSIONS.
2. HATCH SHALL BE EJ PRODUCT NUMBER H42601991, OR APPROVED EQUAL.
3. VALVE VAULT TOP SLAB SHALL BE OVERSIZED AS NECESSARY FOR HATCH.
4. VALVE VAULT ACCESS HATCH AND CONCRETE TOP SHALL BE RATED FOR UNINTENDED H-20 LOADING.
5. ACCESS HATCH SHALL BE EQUIPPED WITH INTEGRAL FALL PROTECTION. CONTRACTOR SHALL COORDINATE INSTALLATION WITH VALVE VAULT COATING AND ENSURE PROPER INSTALLATION.
6. TOP OF HATCH SHALL BE 1/4" DIAMOND PLATE W/ NON-SLIP SURFACE. NON-SLIP SURFACE SHALL BE SLIPNOT, GRIT FREE, ALUMINUM GRIP PLATE AS MANUFACTURERED BY W.S. MOLNAR COMPANY OR APPROVED EQUAL.
7. HATCH SHALL BE EQUIPPED WITH HYDRAULIC LIFT SPRINGS TO ASSIST WITH OPENING.
8. HATCH SHALL HAVE A RECESSED PADLOCK CLIP FOR LOCKING.
9. ALL HARDWARE AND HINGES SHALL BE SS.

EXISTING WETWELL ACCESS HATCH SPECIFICATIONS:

1. ACCESS HATCH SHALL BE MODEL H36421001 AS MANUFACTURED EJ, OR APPROVED EQUAL.
2. HATCH SHALL BE RATED FOR PEDESTRIAN LOADING.
3. HATCHES SHALL BE TOP MOUNTED AND BOLTED TO EXISTING STRUCTURE PER HATCH MANUFACTURER'S RECOMMENDATIONS.
4. THE PUMP ACCESS HATCHES SHALL HAVE INTERIOR CLEAR DIMENSIONS EQUAL TO THE EXISTING OPENING SIZE.
5. APPROXIMATE CLEAR OPEN DIMENSION IS 36"X42", CONTRACTOR SHALL FIELD VERIFY ALL DIMENSIONS.
6. CONTRACTOR SHALL INSTALL A 2:1 SLOPED GROUT PAD AROUND THE NEW HATCHES TO CONFORM TO THE TOP OF THE NEW HATCH.

SHEET NOTES:

1. THE INTERIOR SURFACES OF THE EXISTING WETWELL SHALL BE COATED PER THE TECHNICAL SPECIFICATIONS.
2. REBAR ANCHORS SHALL BE #5 BARS 12" LONG DRILLED AND EPOXIED 3" INTO CONCRETE. SPACE ANCHORS AT 9" MAX O.C. AND PROVIDE 2" MIN. CLEARANCE TO LIMIT OF GROUT.
3. AT (N) PIPE, CORE THRU (E) WALL, INSTALL WATER STOP, & GROUT AROUND PENETRATION.
4. (E) DRY WELL ROOF AT VALVE VAULT SHALL ONLY BE DEMOLISHED & (N) VALVE VAULT INSTALLED AFTER (E) STRUCTURE HAS BEEN BACKFILLED TO ELEV = 98±.

NO	DATE	APPR	REVISIONS
1			
2			
3			
4			
5			
6			

Schaaf & Wheeler
CONSULTING CIVIL ENGINEERS
1171 HOMESTEAD RD, STE. 255
SANTA CLARA, CA 95050
(408) 246-4848

CITY OF ALAMEDA

GROUP 4 - SEWERAGE PUMP STATION RENOVATIONS FOR RELIABILITY AND SAFETY IMPROVEMENTS

HARBOR BAY PARKWAY 1

IMPROVEMENT PLAN & SECTIONS

DATE:	SCALE:	DESIGN:	DRAWN:	CHECKED:
11/27/19	AS SHOWN	CLP	CLP	BLS

DWG 9425 CASE 35

C24

#10 HARBOR BAY PARKWAY 1 PUMP STATION

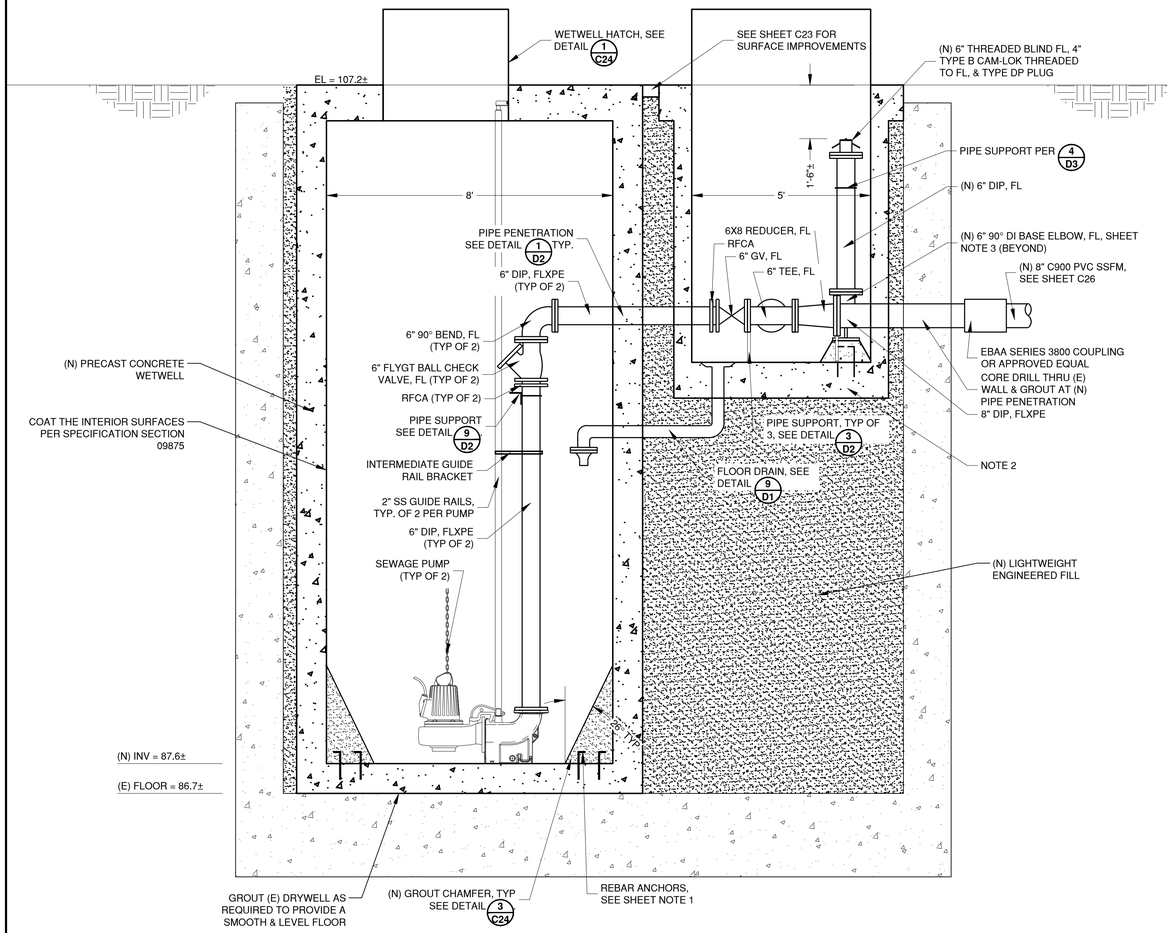

IMPROVEMENT SECTION A/C25

SCALE:1/2" = 1'

SHEET NOTES:

1. REBAR ANCHORS SHALL BE #5 BARS 12" LONG DRILLED AND EPOXIED 3" INTO CONCRETE. SPACE ANCHORS AT 9" MAX O.C. AND PROVIDE 2" MIN. CLEARANCE TO LIMIT OF GROUT.
2. REMOVE (E) DRY WELL ROOF AT VALVE VAULT & INSTALL (N) VALVE VAULT AFTER (E) DRY WELL HAS BEEN BACKFILLED TO ELEV = 98'±.
3. INSTALL GROUT UNDER BASE ELBOW. ANCHOR GROUT TO VAULT W/ 4 #5 BARS, DRILLED AND EPOXIED 3" INTO CONCRETE FLOOR. PROVIDE 2" MIN. CLEARANCE BETWEEN REBAR AND EDGE OF GROUT.

NO	REVISIONS	DATE	APPR
1			
2			
3			
4			
5			
6			



Schaaf & Wheeler
CONSULTING CIVIL ENGINEERS
1171 HOMESTEAD RD, STE. 255
SANTA CLARA, CA 95050
(408) 246-4848

CITY OF ALAMEDA

GROUP 4 - SEWERAGE PUMP STATION RENOVATIONS FOR RELIABILITY AND SAFETY IMPROVEMENTS

HARBOR BAY PARKWAY 1

IMPROVEMENT SECTION

DATE:	11/27/19
SCALE:	AS SHOWN
DESIGN:	CLP
DRAWN:	CLP
CHECKED:	BLS

DWG 9425 CASE 35

#10 HARBOR BAY PARKWAY 1 PUMP STATION

HARBOR BAY PARKWAY 1 BASIS OF BEARING

BEARINGS AND COORDINATES PER TRACT 7063, BK 227, PAGE 62. BETWEEN FOUND MONUMENTS.
N 84° 26' 19" W, 591.82' MONUMENT TO MONUMENT
HELD COORDINATE FOR MONUMENT (3176) AS N451063.687 E1498734.98

HARBOR BAY PARKWAY 1 BENCHMARK

HELD SSMH 514 RIM AS SHOWN ON CITY'S SYSTEM MAP ELEV. = 106.56

APPROXIMATE COORDINATES		
NORTHING	EASTING	DESCRIPTION
451050.35	1498654.62	CENTER OF NEW WETWELL
451002.64	1498658.92	90 DEGREE BEND
451011.83	1498751.23	45 DEGREE BEND
451008.26	1498755.71	CENTER OF DISCHARGE MANHOLE

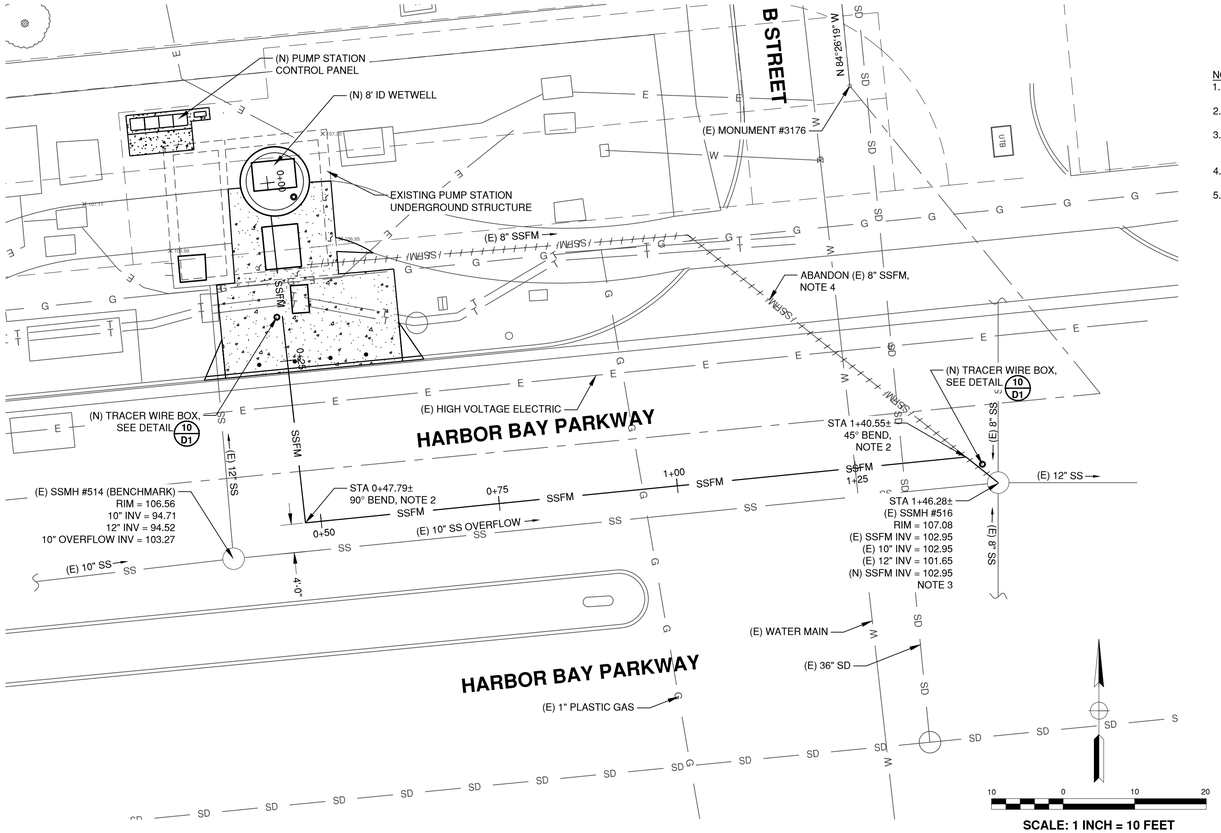

FORCE MAIN PLAN

SCALE: 1" = 10'

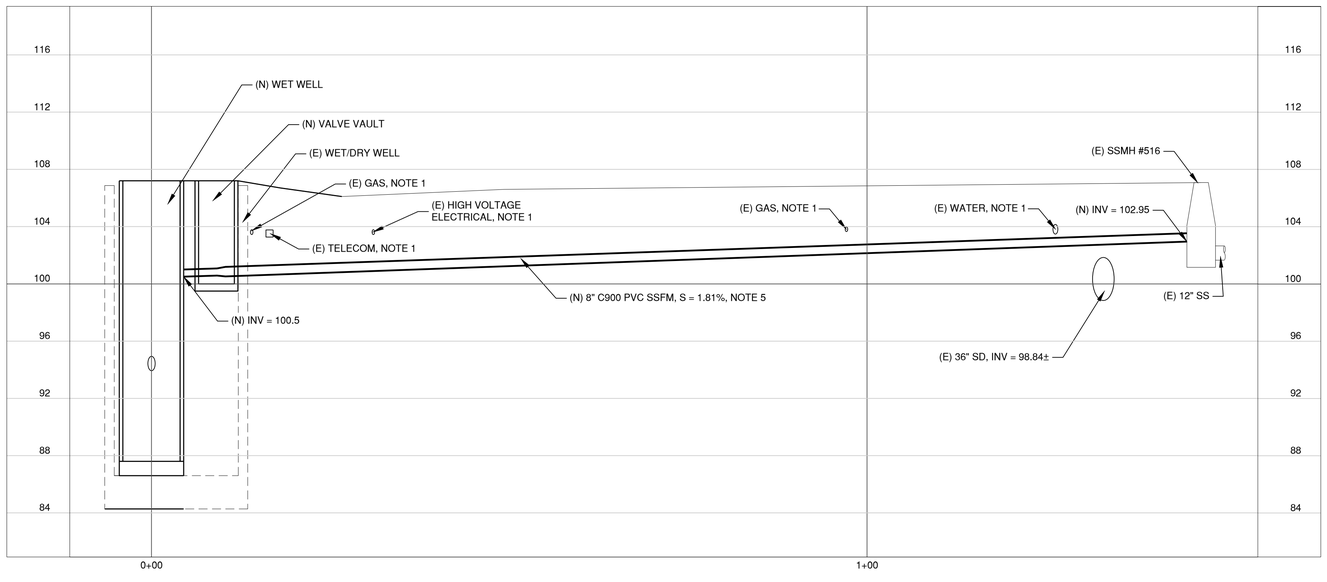

FORCE MAIN PROFILE

HORIZONTAL SCALE: 1" = 10'
VERTICAL SCALE: 1" = 5'

NOTES:
1. ELEVATION OF (E) UTILITY IS UNKNOWN, CONTRACTOR SHALL POTHOLE (E) UTILITY PRIOR TO CONSTRUCTION OF SSFM.
2. SSFM BENDS SHALL BE DUCTILE IRON, MECHANICAL RESTRAINED JOINTS W/ EBAA 2000 PV OR APPROVED EQUAL.
3. (E) SSFM IS 8" PVC W/ CI BENDS, DI THIMBLE, FLEXIBLE COUPLINGS, & THRUST BLOCK WITHIN 4 FT OF (E) SSMH. REMOVE (E) SSFM PIPE, CHIP OR CORE DRILL THRU (E) SSMH, INSTALL (N) WATER STOP AND GROUT AROUND CONNECTION W/ (N) SSFM.
4. ABANDON (E) SSFM BY PLUGGING ENDS W/ 2 FT MIN OF CONCRETE & FILLING W/ SAND OR CDF. REMOVE (E) SSFM WITHIN TRENCH FOR (N) SSFM.
5. SEE DETAIL 8/D1 FOR INSTALLATION OF SSFM. INSTALL A CONCRETE SADDLE WHERE CLEARANCE BETWEEN (E) UTILITY & (N) SSFM IS LESS THAN 12" PER DETAIL 6/D1

NO	REVISIONS	DATE	APPR
1			
2			
3			
4			
5			
6			

Schaaf & Wheeler
CONSULTING CIVIL ENGINEERS
1171 HOMESTEAD RD, STE. 255
SANTA CLARA, CA 95050
(408) 246-4848

CITY OF ALAMEDA
GROUP 4 - SEWERAGE PUMP STATION RENOVATIONS FOR RELIABILITY AND SAFETY IMPROVEMENTS
HARBOR BAY PARKWAY 1 FORCE MAIN

DATE:	11/27/19
SCALE:	AS SHOWN
DESIGN:	CLP
DRAWN:	CLP
CHECKED:	BLS

DWG 9425 CASE 35

C26

55 OF 70

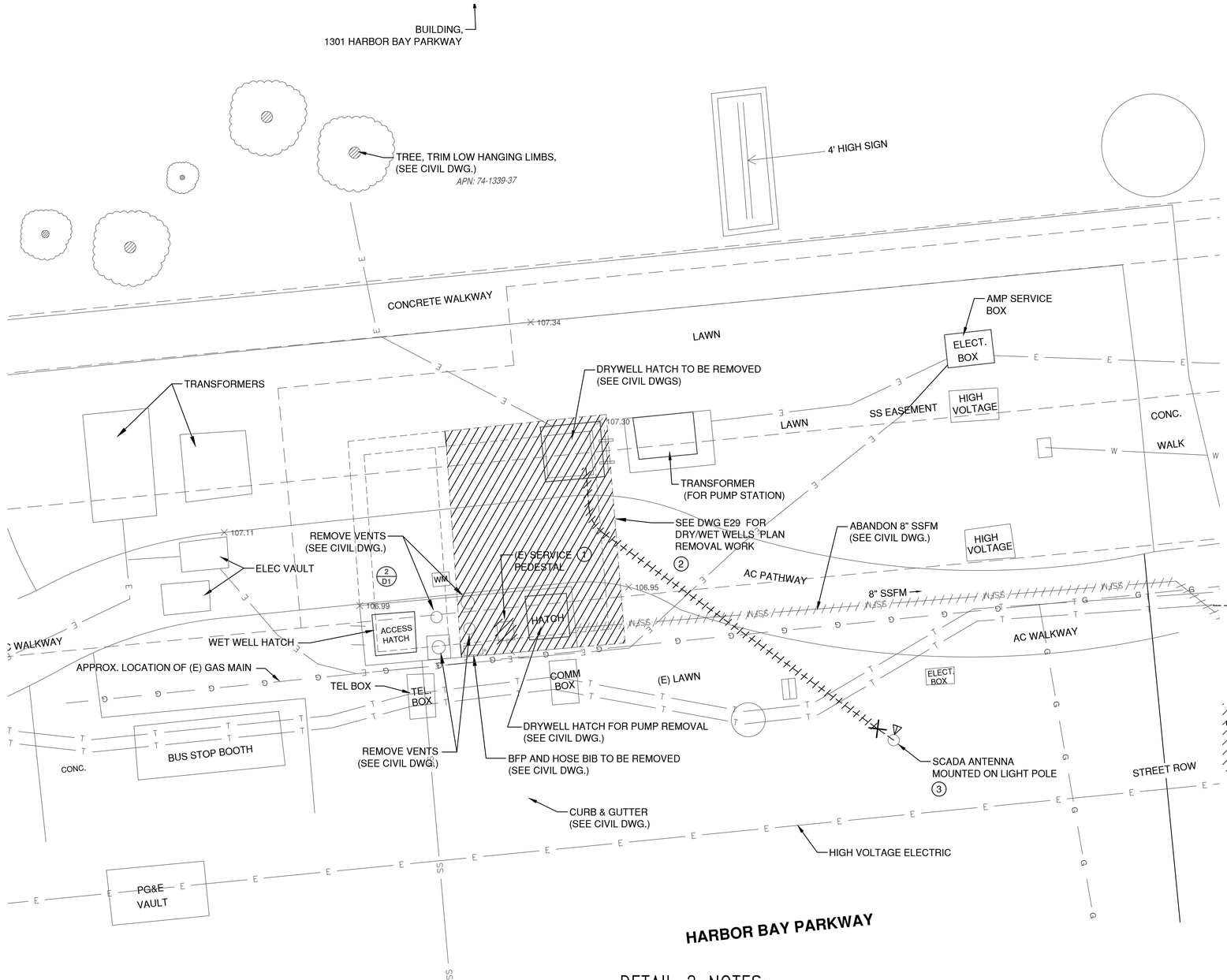

GENERAL NOTES:

1. IT IS THE INTENTION OF THIS PROJECT TO LEAVE THE EXISTING DRY WELL AND WET WELL COMPLETELY CLEAR AND FREE OF ANY AND ALL EXISTING ELECTRICAL APPARATUS THAT IS NOT IN USE OR THAT IS BEING REPLACED BY THIS PROJECT. THIS INCLUDES DEVICES, CONDUITS, BOXES, IN-GROUND BOXES SERVING THE WELLS BUT LOCATED OUTSIDE THE WELLS AND ANY OTHER SYSTEM THAT EXIST BUT WILL NOT BE USED OR REPLACED AT THE COMPLETION OF THIS PROJECT WHETHER SHOWN SPECIFICALLY ON THESE PLANS FOR REMOVAL OR NOT.
2. CITY RESERVES THE RIGHT OF REFUSAL ON ANY OF THE EXISTING EQUIPMENT AND DEVICES BEING REMOVED IN THIS PROJECT. ANY EQUIPMENT OR DEVICES NOT WANTED BY THE CITY SHALL BECOME THE PROPERTY OF THE CONTRACTOR AND SHALL BE REMOVED FROM THE PROJECT SITE.
3. SEAL ALL OPENINGS (FOR CONDUIT AND ELECTRICAL DEVICES) TO THE EXTERIOR OF THE WET WELL, AND BETWEEN THE DRY AND WET WELL.

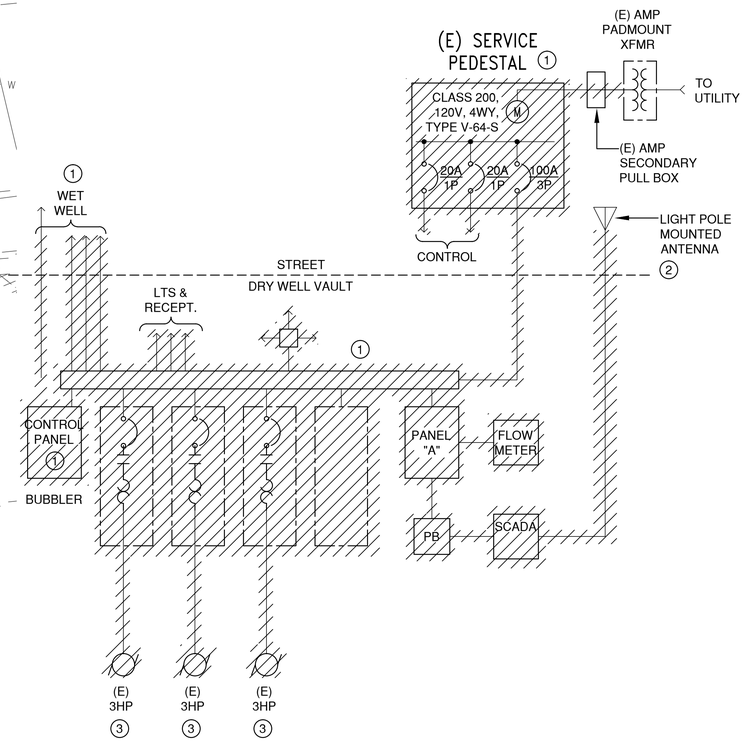

DETAIL 2 NOTES:

1. COORDINATE WITH ALAMEDA MUNICIPAL POWER (AMP) FOR REMOVAL OF EXISTING METER. REMOVE CONDUCTORS UP TO (E) AMP PADMOUNT TRANSFORMER. CUT (E) CONDUIT STUB-UPS FLUSH WITH CONCRETE SURFACE. PLUG CONDUIT WITH CONCRETE AND ABANDON REMAINING CONDUIT IN PLACE.
2. REMOVE ALL CONDUIT, JUNCTION BOXES, DEVICES, WIRING, CONTROLS AND BUBBLER SYSTEM THAT MAY EXIST FROM DRY/WET WELL. DISCONNECT AND REMOVE (E) PUMPS. SEE ENLARGED PLANS.
3. (E) SCADA ANTENNA AND CONDUIT TO REMAIN. REMOVE SCADA ANTENNA CABLE FROM (E) LIGHT POLE TO (E) SCADA SYSTEM INSIDE DRYWELL. CONTRACTOR TO CONFIRM CONDUIT SIZE.

DETAIL 1 NOTES:

1. REMOVE (E) SERVICE AND CONTROL PANEL INCLUDING ALL ENCLOSED EQUIPMENT AND DEVICES. VERIFY CONNECTIONS AND EXISTING CONDITIONS TO THE EXTENT REQUIRED TO SAFELY REMOVE EQUIPMENT.
2. DISCONNECT AND RETAIN ANTENNA FOR RE-USE.
3. DISCONNECT AND REMOVE (E) PUMPS.

2 — HARBOR BAY PARKWAY 1 SITE PLAN
SCALE: 1" = 5'-0"

0 5' 10' 15'
SCALE: 1" = 5'-0"

1 — HARBOR BAY PARKWAY 1 ONE-LINE DIAGRAM
SCHEMATIC

NO	DATE	APPR	REVISIONS
1			
2			
3			
4			
5			
6			
7			

PROFESSIONAL ENGINEER — REGISTERED — C. HERBOCIA — No. 9580 — 9/30/20 — ELECTRICAL — STATE OF CALIFORNIA

engineers, inc.
3350 scott blvd., bldg. 11
santa clara, ca. 95054
(408) 986-8558
FAX (408) 986-9627
PROJECT NO. 18697-06

CITY OF ALAMEDA
GROUP 4 - SEWERAGE PUMP STATION RENOVATIONS
FOR RELIABILITY AND SAFETY IMPROVEMENTS
HARBOR BAY PARKWAY 1 PUMP STATION
ONE-LINE & SITE PLAN - REMOVAL WORK

DATE:	11/27/19
SCALE:	AS SHOWN
DESIGN:	JCH
DRAWN:	VDM
CHECKED:	JCH

DWG 9425 CASE 35

E28

56 OF 70

BORDER = ANSI B.dwg
SCALE = 1:1
FILE: M:\11697-01 Alemda Pumps \HB1-E11R.dwg 05/31/11 09:16 by rostris
XREF: M:\11697-01 Alemda Pumps \WPS-BDR.dwg
XREF: M:\11697-01 Alemda Pumps \X-BASE-APS.dwg

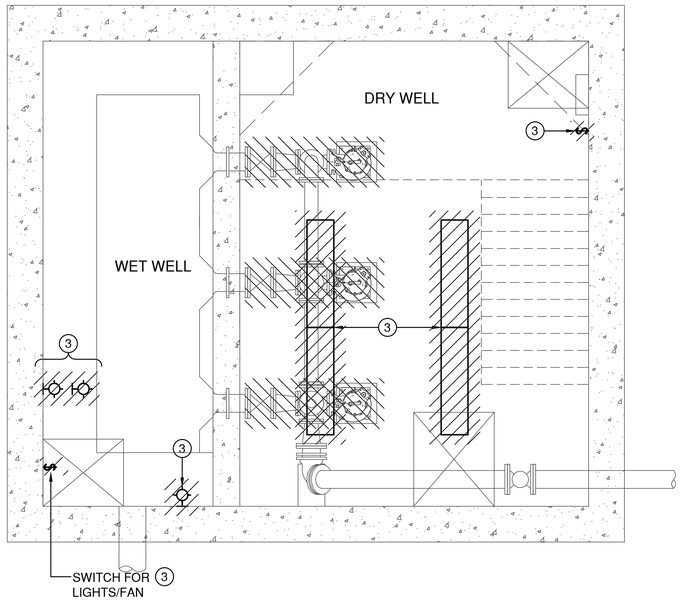

3 E29 LIGHTING PLAN – MEZZANINE
SCALE: 3/8" = 1'-0"

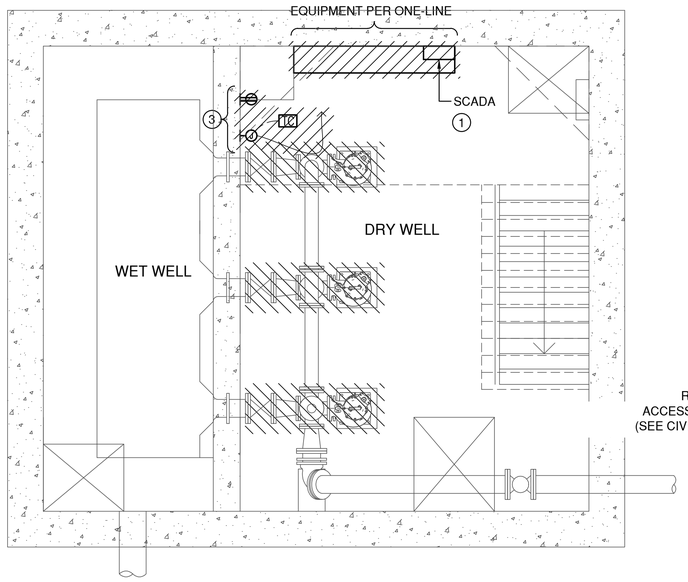

2 E29 POWER PLAN – MEZZANINE
SCALE: 3/8" = 1'-0"

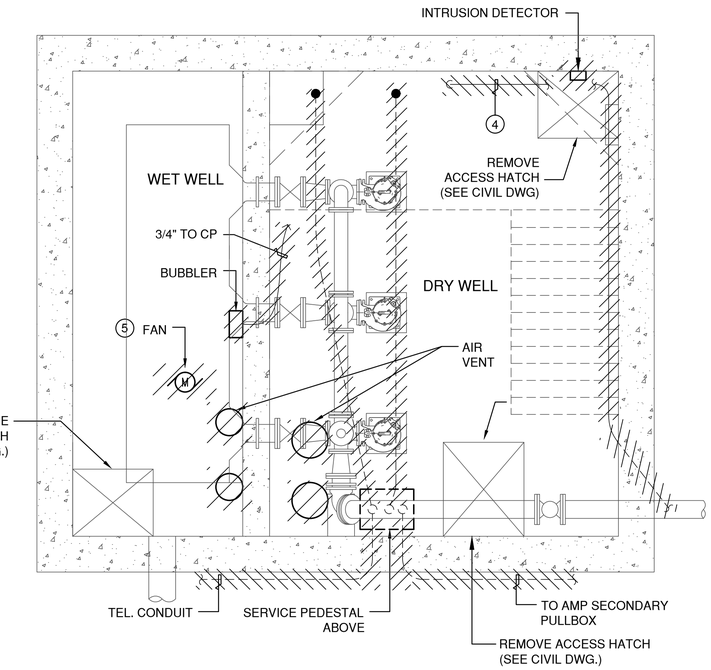

1 E29 PUMP STATION – ROOF
SCALE: 3/8" = 1'-0"

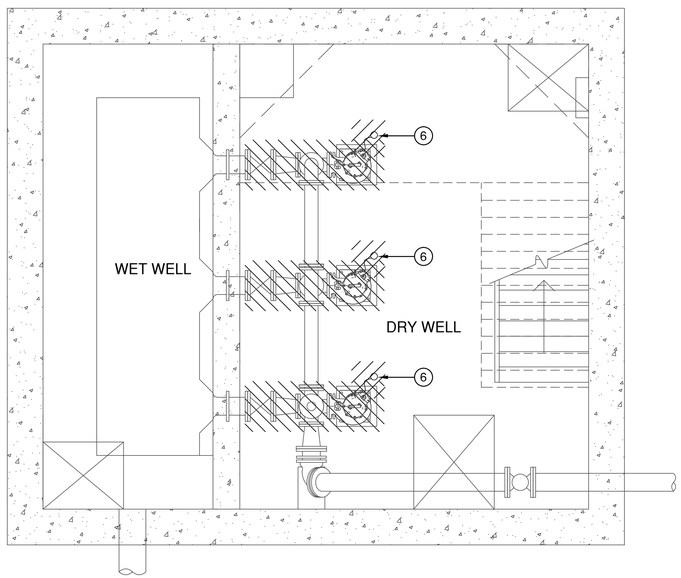

5 E29 POWER PLAN – BOTTOM LEVEL
SCALE: 3/8" = 1'-0"

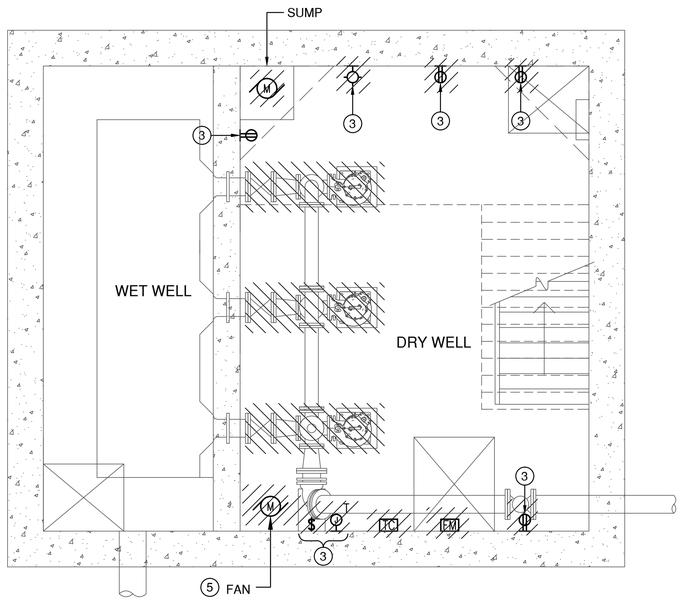

4 E29 LIGHTING AND RECEPTACLE PLAN – BOTTOM LEVEL
SCALE: 3/8" = 1'-0"

GENERAL NOTES:

1. IT IS THE INTENTION OF THIS PROJECT TO LEAVE THE EXISTING DRY/WET WELLS COMPLETELY CLEAR AND FREE OF ANY AND ALL EXISTING ELECTRICAL APPARATUS THAT IS NOT IN USE OR THAT IS BEING REPLACED BY THIS PROJECT. THIS INCLUDES DEVICES, CONDUIT, BOXES, IN GROUND BOXES SERVING THE WELL BUT LOCATED OUTSIDE THE WELL, AND ANY OTHER SYSTEMS THAT EXIST BUT WILL NOT BE USED OR REPLACED AT THE COMPLETION OF THIS PROJECT WHETHER SHOWN SPECIFICALLY ON THESE PLANS FOR REMOVAL OR NOT.
2. CITY RESERVES THE RIGHT OF REFUSAL ON ANY OF THE EXISTING EQUIPMENT AND DEVICES BEING REMOVED IN THIS PROJECT. ANY EQUIPMENT OR DEVICES NOT WANTED BY THE CITY SHALL BECOME THE PROPERTY OF THE CONTRACTOR AND SHALL BE REMOVED FROM THE PROJECT SITE.
3. SEAL ALL OPENINGS (FOR CONDUIT AND ELECTRICAL DEVICES) TO THE EXTERIOR OF THE WET WELL, AND BETWEEN THE DRY AND WET WELL.

SHEET NOTES:

1. REMOVE EXISTING SCADA SYSTEM.
2. REMOVE STARTERS, AIR COMPRESSOR, FLOW RECORDER AND CONTROL PANELS.
3. REMOVE EXISTING LIGHTS, RECEPTACLES, ASSOCIATED WIRE AND CONDUIT. SEAL OFF ALL CONDUIT PENETRATIONS AND OPENINGS FOR RECESSED BOXES.
4. REMOVE EXISTING COAX CABLE UP TO LIGHT POLE MOUNTED ANTENNA.
5. (E) BLOWER FAN DUCT TO BE REMOVED. SEE CIVIL DRAWINGS FOR DETAIL INFORMATION.
6. DISCONNECT AND REMOVE WIRING BACK TO CONTROL EQUIPMENT ON MEZZANINE. CUT CONDUIT LEVEL WITH FLOOR AND PLUG WITH CONCRETE.

NO	REVISIONS	DATE	APPR
1			
2			
3			
4			
5			
6			

REGISTERED PROFESSIONAL ENGINEER JULIO C. HERDOCIA No. 9580 9/30/20 ELECTRICAL STATE OF CALIFORNIA

engineers, inc.
3350 scott blvd., bldg. 11
santa clara, ca. 95054
(408) 986-8558
FAX (408) 986-9627
PROJECT NO. 18697-06

CITY OF ALAMEDA
GROUP 4 - SEWERAGE PUMP STATION RENOVATIONS FOR RELIABILITY AND SAFETY IMPROVEMENTS
HARBOR BAY PARKWAY 1 PUMP STATION
DRY WELL PLAN & DETAILS - REMOVAL WORK

DATE: 11/27/19
SCALE: AS SHOWN
DESIGN: JCM
DRAWN: VDM
CHECKED: JOH

DWG 9425 CASE 35

E29

57 OF **70**

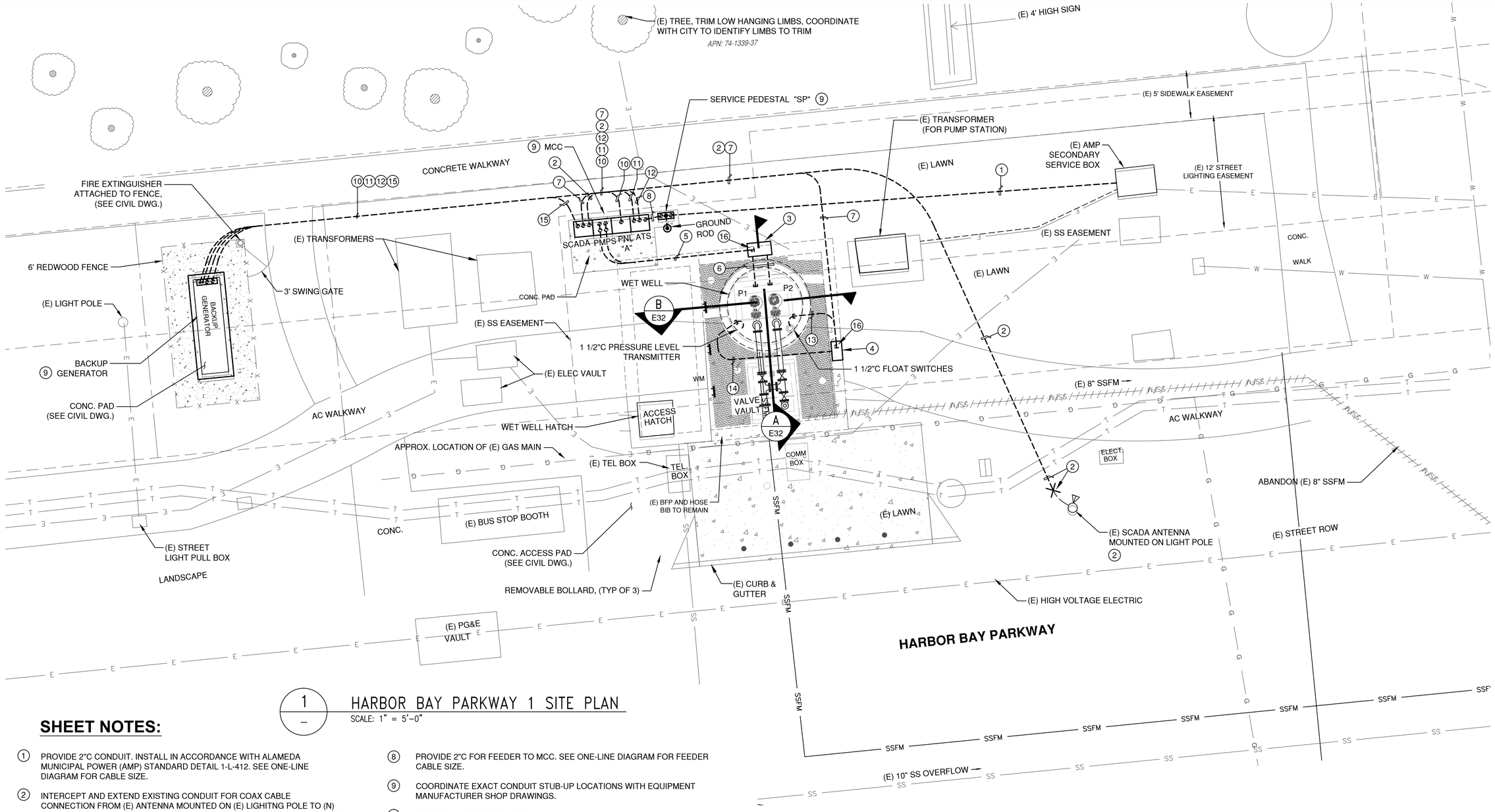

1 — HARBOR BAY PARKWAY 1 SITE PLAN
SCALE: 1" = 5'–0"

SHEET NOTES:

1. PROVIDE 2"C CONDUIT. INSTALL IN ACCORDANCE WITH ALAMEDA MUNICIPAL POWER (AMP) STANDARD DETAIL 1-L-412. SEE ONE-LINE DIAGRAM FOR CABLE SIZE.
2. INTERCEPT AND EXTEND EXISTING CONDUIT FOR COAX CABLE CONNECTION FROM (E) ANTENNA MOUNTED ON (E) LIGHITNG POLE TO (N) SCADA SYSTEM LOCATED IN THE (N) MCC. CONTRACTOR SHALL DETERMINE AND DOCUMENT CONDUIT SIZE.
3. PROVIDE IN GROUND PULL BOX FOR PUMP POWER AND MONITORING CONTROL CIRCUITS, SIZE 6T, CHRISTY B1730 WITH 12" EXTENSION (17" x 30") REINFORCED TRAFFIC RATED CONCRETE BOX WITH BOLT DOWN, STEEL CHECKER PLATED COVER.
4. PROVIDE IN GROUND PULL BOX FOR INSTRUMENTATION, SIZE 5T, CHRISTY B1324 WITH 12" EXTENSION (13" x 24") REINFORCED TRAFFIC RATED CONCRETE BOX WITH BOLT DOWN, STEEL CHECKER PLATED COVER.
5. PROVIDE (2) 1" PVC COATED RSC CONDUITS FOR PUMP POWER, (2) 1" PVC COATED RSC CONDUIT FOR MOISTURE AND TEMPERATURE MONITORING CONTROL CIRCUITS FOR WET WELL PUMPS. SEE ONE-LINE DIAGRAM FOR CABLE SIZES.
6. PROVIDE (2) 2 1/2" PVC COATED RSC FOR PUMP CABLING.
7. PROVIDE (2) 1 1/2"C PVC COATED RSC FOR PRESSURE LEVEL TRANSMITTER AND HIGH & LOW LEVEL FLOAT CABLES.
8. PROVIDE 2"C FOR FEEDER TO MCC. SEE ONE-LINE DIAGRAM FOR FEEDER CABLE SIZE.
9. COORDINATE EXACT CONDUIT STUB-UP LOCATIONS WITH EQUIPMENT MANUFACTURER SHOP DRAWINGS.
10. PROVIDE 1"C CONDUIT WITH
    2 #10, PNL "A", CKT 4 FOR BATTERY CHARGER
    2 #10, PNL "A", CKT 2 FOR JACKET WATER HEATER
    1 #10 (G)
11. PROVIDE 2 #12 + 1 #12 (G) IN 1"C FOR GENERATOR START SIGNAL WIRES.
12. PROVIDE 2"C FOR FEEDER FROM ATS TO GENERATOR. SEE ONE-LINE DIAGRAM FOR CABLE SIZES.
13. PROVIDE (1) 1 1/2"C PVC COATED RSC FOR HIGH AND LOW LEVEL FLOAT CABLES.
14. PROVIDE (1) 1 1/2"C PVC COATED RSC FOR PRESSURE LEVEL TRANSMITTER CABLE.
15. PROVIDE 1"C WITH 2 #14 (GENERATOR COMMON ALARM)
    2 #14 (LOW FUEL ALARM)
    2 #14 (SPARES)
    1 #14 (G)
16. PROVIDE CLASS 1, DIV. 1 SEALING FITTINGS IN PULLBOX FOR CONDUITS TO MCC CONTROL SECTION.

GENERAL NOTES:

1. ALL WORK SHOWN ON THIS DRAWING IS NEW WORK TO BE PROVIDED UNLESS INDICATED (E) OR EXISTING OR (R) RELOCATED.

0 5' 10' 15'
SCALE: 1" = 5'–0"

NO	REVISIONS	DATE	APPR
1			
2			
3			
4			
5			
6			
7			

PROFESSIONAL ENGINEER — REGISTERED — JULIO C. HERDOCIA — No. 9580 — 9/30/20 — ELECTRICAL — STATE OF CALIFORNIA

engineers, inc.
3350 scott blvd., bldg. 11
santa clara, ca 95054
(408) 986-8556
FAX (408) 986-9627
PROJECT NO. 18697-06

CITY OF ALAMEDA
GROUP 4 - SEWERAGE PUMP STATION RENOVATIONS FOR RELIABILITY AND SAFETY IMPROVEMENTS
HARBOR BAY PARKWAY 1 PUMP STATION
SITE PLAN - NEW WORK

DATE:	SCALE:	DESIGN:	DRAWN:	CHECKED:
11/27/19	AS SHOWN	JCH	VDM	JCH

DWG 9425 CASE 35

E30
58 OF 70

BORDER = ANSI D
SCALE = 1:1
FILE: M:\11697-01 Alemda Pumps \HB1-E11.dwg 06/01/11 11:11 by rcatris
XREF: M:\11697-01 Alemda Pumps \WPS-BDR.dwg
XREF: M:\11697-01 Alemda Pumps \X-BASE-APS.dwg

GENERAL NOTES:

1. ALL WORK SHOWN ON THIS DRAWING IS NEW WORK TO BE PROVIDED UNLESS INDICATED (E) OR EXISTING OR (R) RELOCATED.

SHEET NOTES:

(1) PROVIDE IN GROUND PULL BOX FOR PUMP POWER AND MONITORING CONTROL CIRCUITS, SIZE 6T, CHRISTY B1730 WITH 12" EXTENSION (17" x 30") REINFORCED TRAFFIC RATED CONCRETE BOX WITH BOLT DOWN, STEEL CHECKER PLATED COVER.

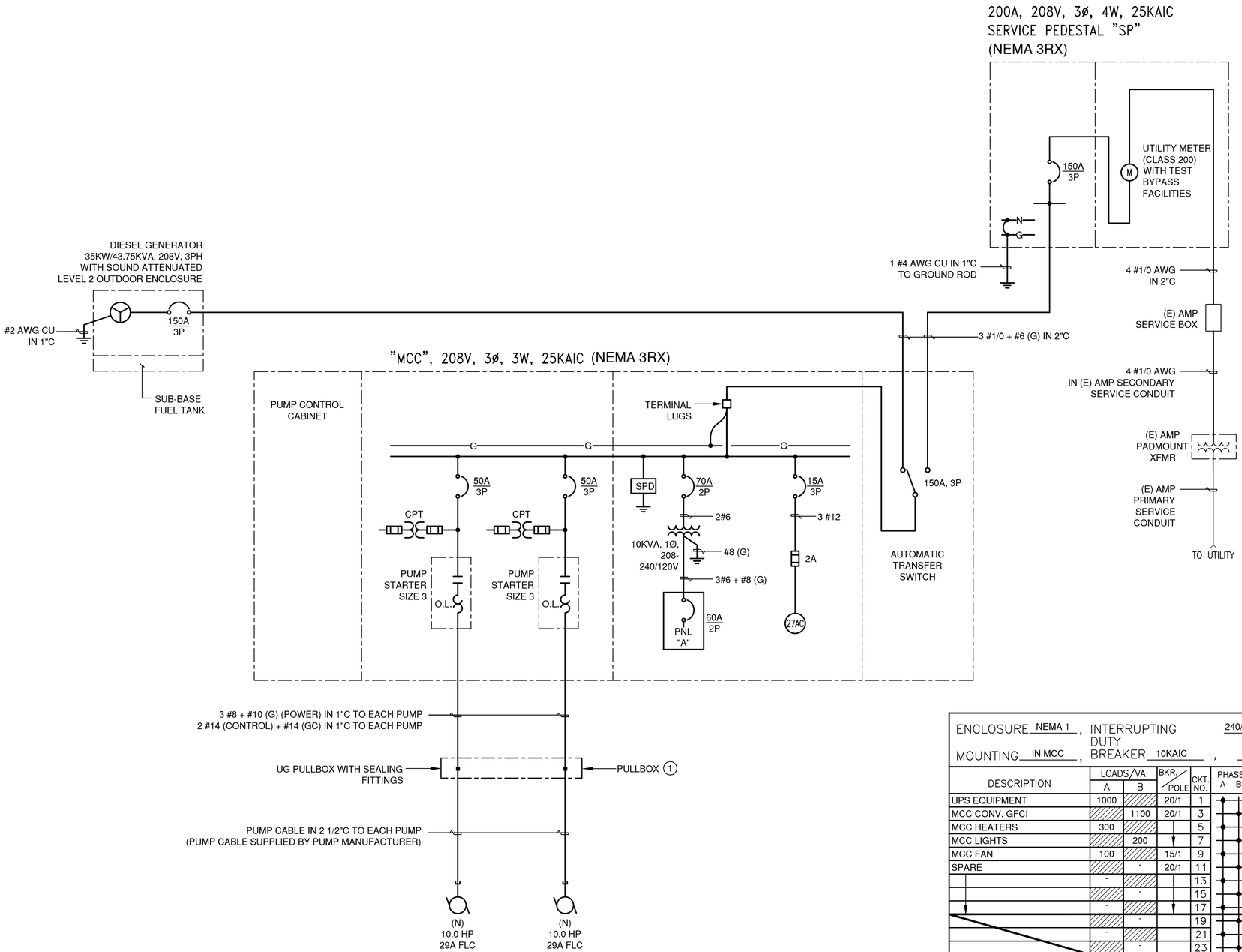

ENCLOSURE NEMA 1, INTERRUPTING DUTY 240/120 VOLT, 3 PHASE, 3 WIRE
MOUNTING IN MCC, BREAKER 10KAIC, 60A A. MAIN BREAKER, 100 A. BUS

DESCRIPTION	LOADS/VA A	LOADS/VA B	BKR./POLE	CKT. NO.	PHASE A	PHASE B	CKT. NO.	BKR./POLE	LOADS/VA A	LOADS/VA B	DESCRIPTION
UPS EQUIPMENT	1000		20/1	1			2	20/1	1500		GENERATOR JACKET HEATER
MCC CONV. GFCI		1100	20/1	3			4			1100	BATTERY CHARGER
MCC HEATERS	300			5			6		-		SPARE
MCC LIGHTS		200		7			8			-	
MCC FAN	100		15/1	9			10		-		
SPARE		-	20/1	11			12			-	
	-			13			14		-		
		-		15			16			-	
	-			17			18		-		
		-		19			20			-	
	-			21			22		-		
		-		23			24			-	
				25			26		-		
		-		27			28			-	
	-			29			30		-		
		-		31			32			-	
	-			33			34		-		
		-		35			36			-	
	-			37			38		-		
		-		39			40			-	
	-			41			42		-		
	1400	1300							1500	1100	

TOTAL: 5.30 KVA PANEL # "A" FEEDER SIZE SEE ONE-LINE DIAGRAM

1 / – HARBOR BAY PARKWAY 1 ONE-LINE DIAGRAM
SCHEMATIC

NO	REVISIONS	DATE	APPR
1			
2			
3			
4			
5			
6			
7			
8			

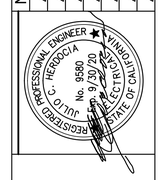

engineers, inc.
3350 scott blvd., bldg. 11
santa clara, ca. 95054
(408) 986-8556
FAX (408) 986-9627
PROJECT NO. 18697-06

CITY OF ALAMEDA
GROUP 4 - SEWERAGE PUMP STATION RENOVATIONS
FOR RELIABILITY AND SAFETY IMPROVEMENTS
HARBOR BAY PARKWAY 1 PUMP STATION
ONE-LINE - NEW WORK

DATE:	11/27/19
SCALE:	AS SHOWN
DESIGN:	JCH
DRAWN:	VDM
CHECKED:	JCH

DWG 9425 CASE 35

E31

59 OF 70

FILE: M:\18697-06 Alameda Pumps – Group 4\56_HB1_E31.dwg 07/26/19 14:49 by vuong
XREF: M:\11697-01 Alameda Pumps I\$_Alameda_Phase-1_Group-3\Xrefs\X0623 – Group 4\SHEET_S&W_Group-4.dwg
SCALE = BORDER =

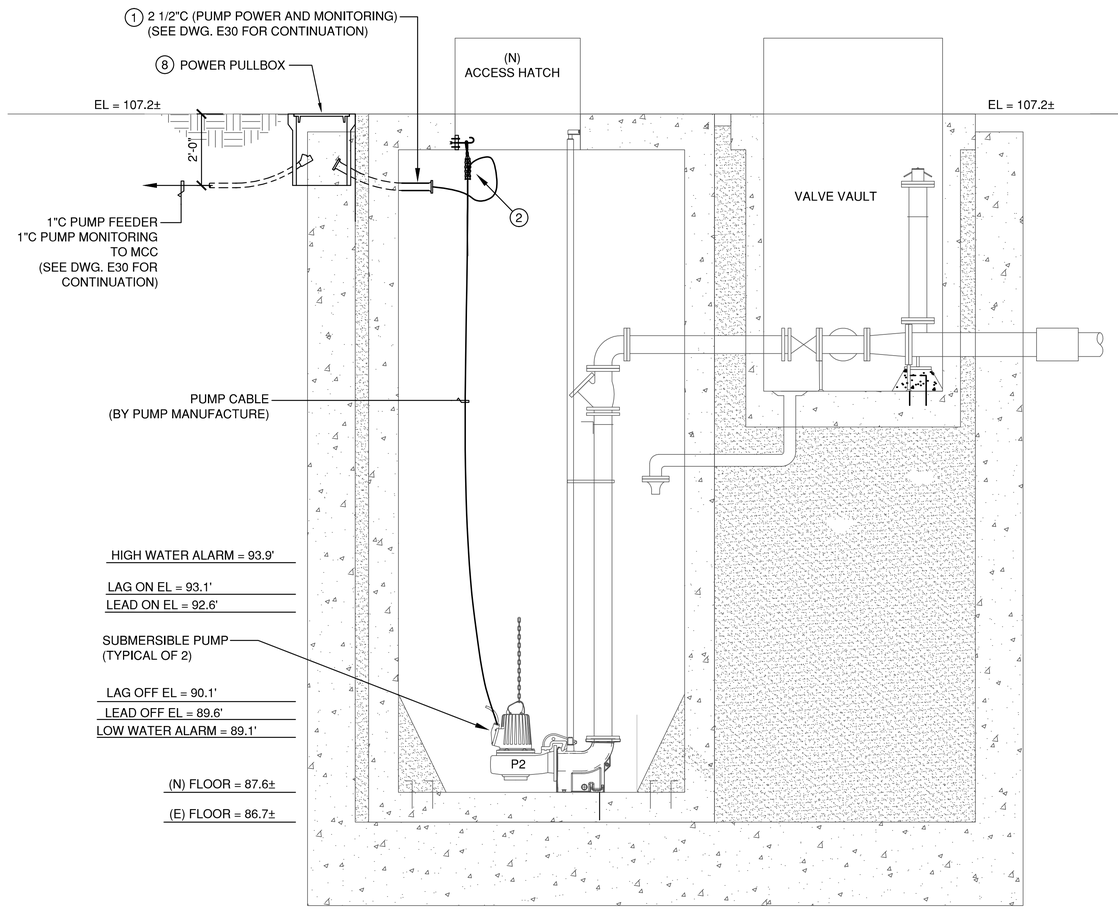

A
WET WELL ELEVATION
SCALE: 1/2" = 1'-0"

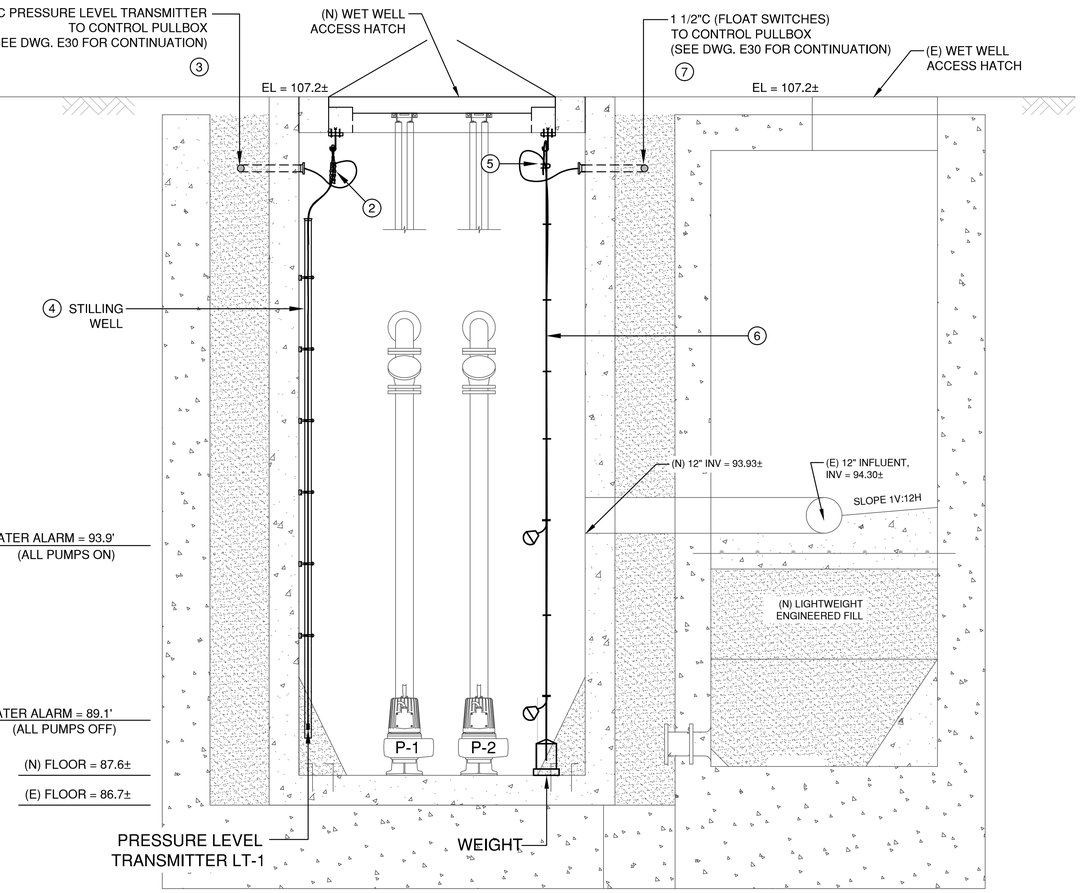

B
WET WELL ELEVATION
SCALE: 1/2" = 1'-0"

SHEET NOTES:

1. (1) 2 1/2"C (PUMP FEEDER CABLE).
INSTALL INSULATED BUSHING AT WET WELL END AND INSULATED GROUNDING BUSHING AT THE POWER PULLBOX. DUCT SEAL BOTH ENDS AFTER CABLE INSTALLATION.
2. STAINLESS STEEL HOOK, STAINLESS STEEL CHANNEL, STAINLESS STEEL ANCHOR BOLTS, AND STAINLESS STEEL CABLE GRIP (CABLE HANGER FOR PRESSURE LEVEL TRANSMITTER).
3. (1) 1 1/2"C (PRESSURE LEVEL TRANSMITTER LT-1).
INSTALL INSULATED BUSHING AT WET WELL END AND INSULATED GROUNDING BUSHING AT THE CONTROL PULLBOX. DUCT SEAL BOTH END AFTER CABLE INSTALLATION
4. PRESSURE LEVEL TRANSMITTER INSIDE STILLING WELL. SEE CIVIL DWG. D2, DETAIL 8. ADJUST CHAMFER PER CIVIL DRAWINGS.
5. STAINLESS STEEL HOOK, STAINLESS STEEL CHANNEL, STAINLESS STEEL ACHOR BOLT, STAINLESS STEEL THIMBLE, STAINLESS STEEL CABLE CLAMPS, AND PVC COATED 15-POUND WEIGHT.
6. 1/4" DIA. STAINLESS STEEL CABLE WITH FLOAT SWITCH CABLES. TIE WRAP WITH HEAVY PLASTIC TIE AT EVERY 2 FT.
7. (1) 1 1/2"C (FLOAT SWITCHES).
INSTALL INSULATED BUSHING AT WET WELL END AND INSULATED GROUNDING BUSHING AT THE CONTROL PULLBOX. DUCT SEAL BOTH END AFTER CABLE INSTALLATION
8. PROVIDE IN GROUND PULL BOX FOR PUMP POWER AND MONITORING CONTROL CIRCUITS, SIZE 6T, CHRISTY B1730 WITH 12" EXTENSION (17" x 30") REINFORCED TRAFFIC RATED CONCRETE BOX WITH BOLT DOWN, STEEL CHECKER PLATED COVER.

NO	DATE	APPR	REVISIONS
1			
2			
3			
4			
5			
6			
7			

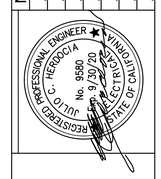

engineers, inc.
3350 scott blvd., bldg. 11
santa clara, ca. 95054
(408) 986-8558
FAX (408) 986-9627
PROJECT NO. 18697-06

CITY OF ALAMEDA
GROUP 4 - SEWERAGE PUMP STATION RENOVATIONS FOR RELIABILITY AND SAFETY IMPROVEMENTS
HARBOR BAY PARKWAY 1 PUMP STATION
WET WELL ELEVATIONS

DATE:	SCALE:	DESIGN:	DRAWN:	CHECKED:
11/27/19	AS SHOWN	JCH	VDM	JCH

DWG 9425 CASE 35

E32

60 OF **70**

File: M:\18697-06 Alameda Pumps - Group 4\57_HB1_E32.dwg, 11/27/2019 3:13 PM, Last saved: Vuong, PlotDate: 11/27/2019 3:45 PM By: Vuong Moi, Plot scale: 1:2.5849, Plot Size: ANSI A (8.50 x 11.00 Inches)
Xrefs: Group3_Well Details SHEET_S&W_Group-4 HBP1_072319

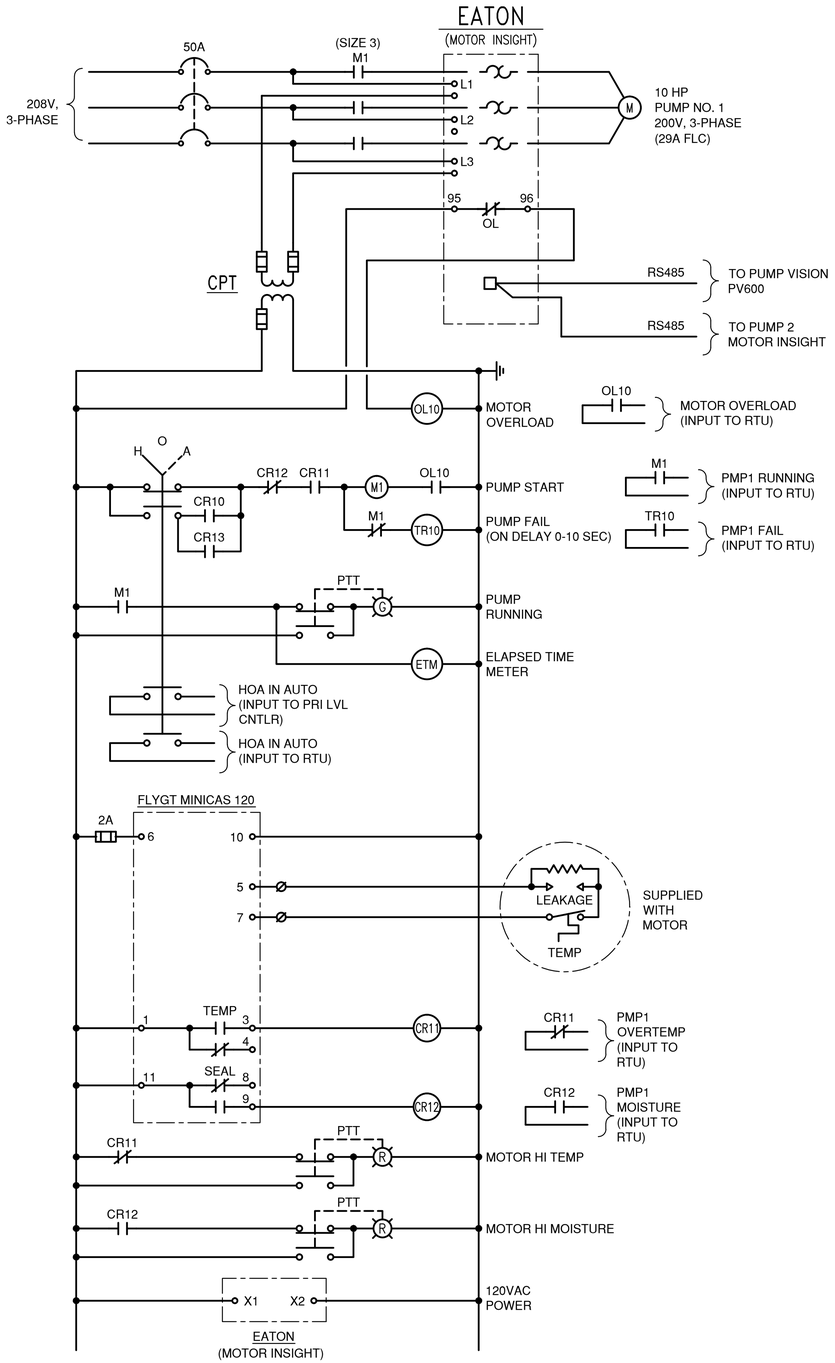

FVNR PUMP No. 1 CONTROL SCHEMATIC DIAGRAM
(SIMILAR FOR PUMP No. 2)

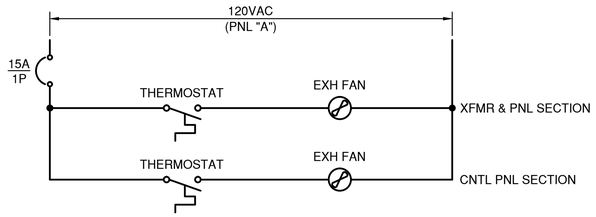

EXHAUST FAN CONTROL SCHEMATIC

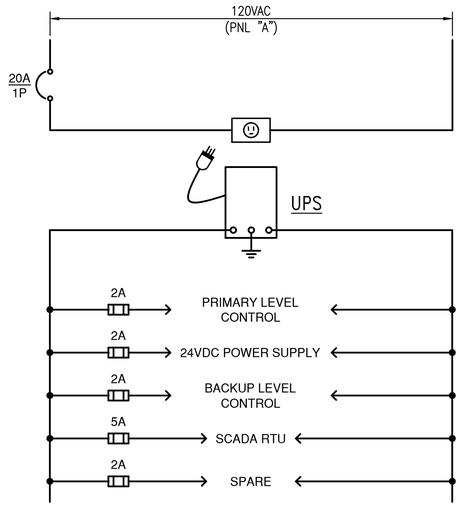

120V UPS SYSTEM SCHEMATIC

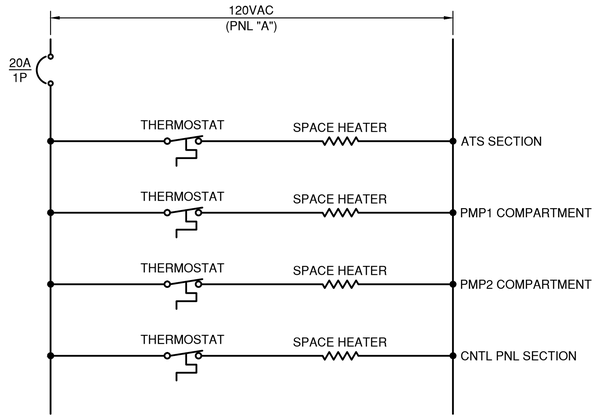

SPACE HEATER CONTROL SCHEMATIC

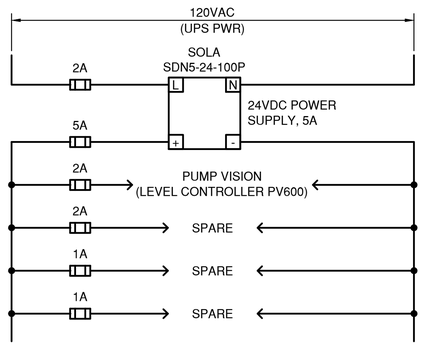

24VDC SYSTEM SCHEMATIC

NO	REVISIONS	DATE	APPR
1			
2			
3			
4			
5			
6			
7			

engineers, inc.
3350 scott blvd., bldg. 11
santa clara, ca. 95054
(408) 986-8558
FAX (408) 986-9627
PROJECT NO. 18697-06

CITY OF ALAMEDA
GROUP 4 - SEWERAGE PUMP STATION RENOVATIONS
FOR RELIABILITY AND SAFETY IMPROVEMENTS
HARBOR BAY PARKWAY 1 PUMP STATION
CONTROL SCHEMATIC DIAGRAM

DATE:	SCALE:	DESIGN:	DRAWN:	CHECKED:
11/27/19	AS SHOWN	JCH	VDM	JCH

DWG 9425 CASE 35

E33

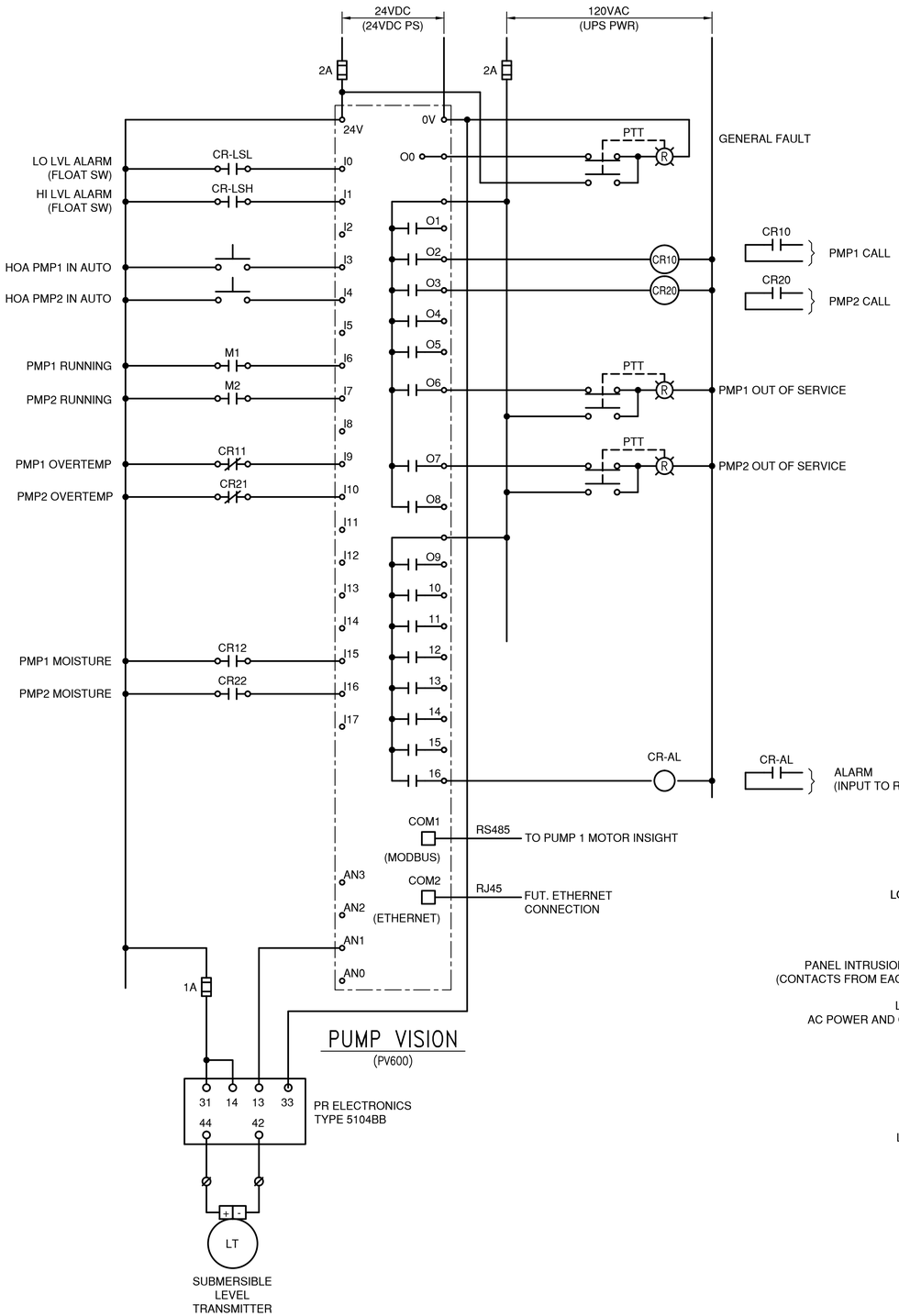

PRIMARY LEVEL CONTROLLER

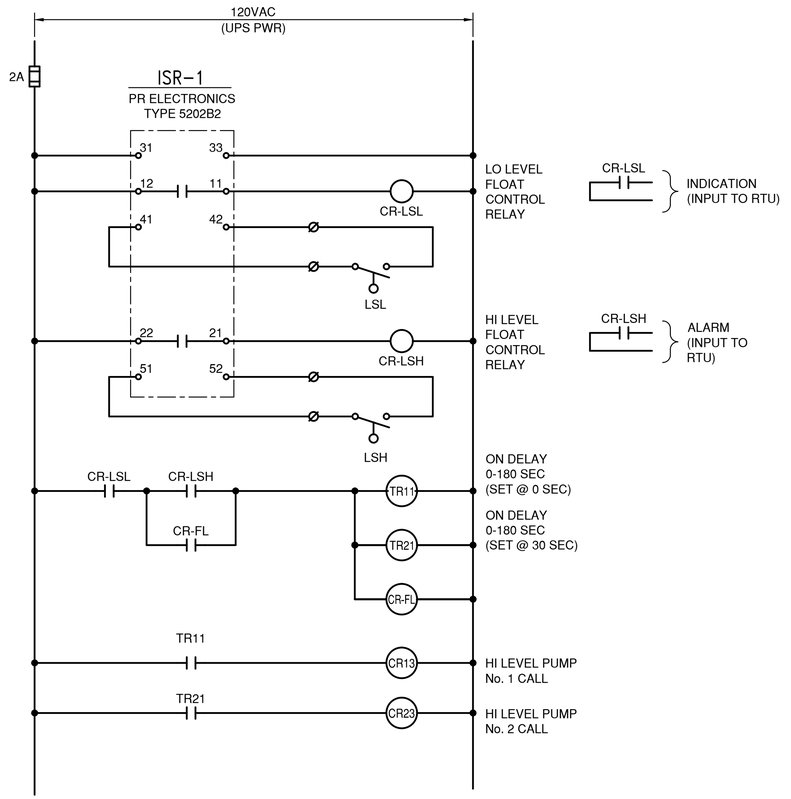

BACKUP LEVEL CONTROL

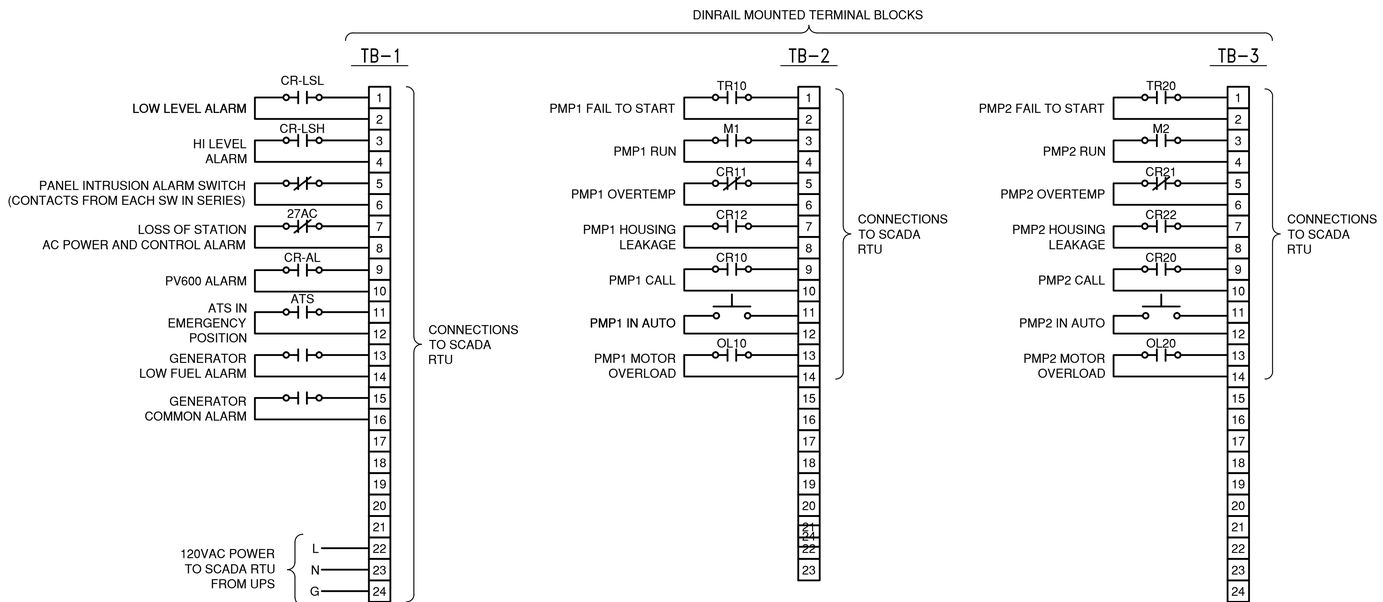

SCADA RTU TERMINATION POINTS

NO	REVISIONS	DATE	APPR
1			
2			
3			
4			
5			
6			
7			

engineers, inc.
3350 scott blvd., bldg. 11
santa clara, ca. 95054
(408) 986-8558
FAX (408) 986-9627
PROJECT NO. 18697-06

CITY OF ALAMEDA

GROUP 4 - SEWERAGE PUMP STATION RENOVATIONS FOR RELIABILITY AND SAFETY IMPROVEMENTS

HARBOR BAY PARKWAY 1 PUMP STATION

SCHEMATIC DIAGRAM

DATE:	SCALE:	DESIGN:	DRAWN:	CHECKED:
11/27/19	~~AS SHOWN~~	JCH	VDM	JCH

DWG 9425 CASE 35

E34

62 OF 70

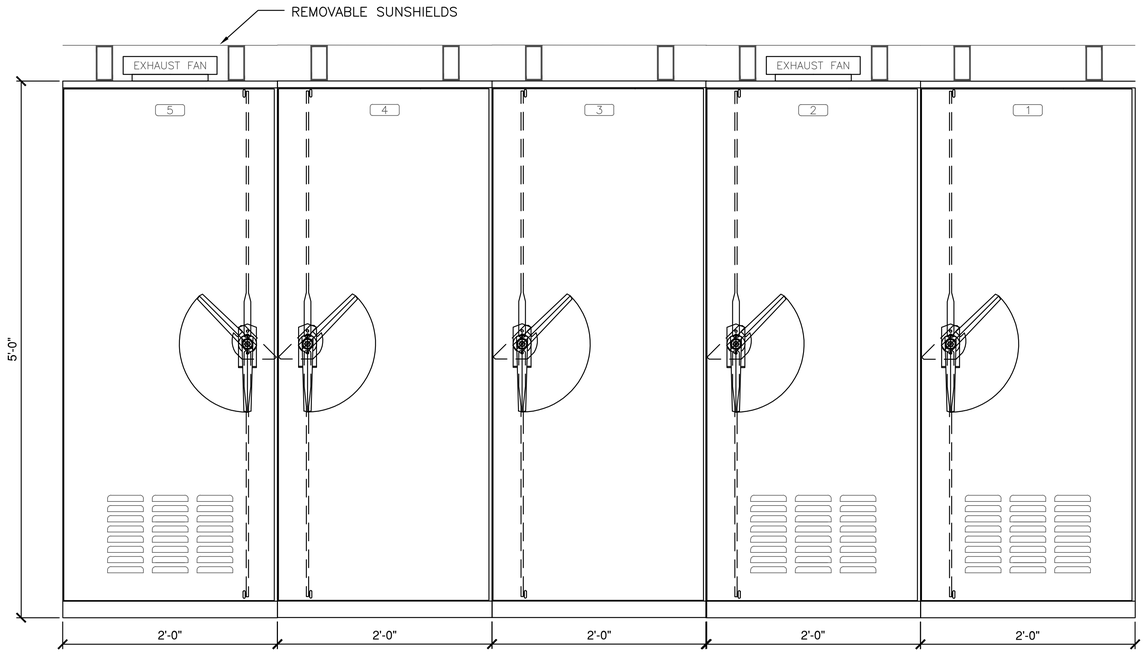

PANEL ELEVATION (4)

NAMEPLATE SCHEDULE				
	TAG#	QTY	TYPE	INSCRIPTION
	1	1	PLATE	ATS
	2	1	PLATE	PANELBOARD AND TRANSFORMER
	3	1	PLATE	PUMP STARTERS PANEL
(5)	4	1	PLATE	PUMP STARTERS PANEL
(1)	5	1	PLATE	CONTROLS AND SCADA EQUIPMENT
	6	1	PLATE	PUMP ELAPSED TIME METER
	7	1	PLATE	PUMP NO. 1 DISCONNECT
	8	1	PLATE	PUMP NO. 2 DISCONNECT
(5)	9	1	PLATE	PUMP NO. 3 DISCONNECT
	10			ATS
	11			PANEL "A"
	12			
	A	1	RING	PUMP RUNNING
	B	1	RING	PUMP OUT OF SERVICE
	C	1	RING	MOTOR HI TEMP
	D	1	RING	MOTOR HI MOISTURE
	E			HAND - OFF - AUTO

(1) RED W/WHITE LETTERS

SHEET NOTES:

(1) REFER TO PUMP STATION SPECIFIC ONE-LINE DIAGRAM.

(2) REFER TO PANEL SCHEDULE FOR MCC DEVICE CIRCUIT NUMBERS (FANS, RECEPTACLES, HEATERS AND LIGHTS).

(3) SEE PLANS FOR PUMP STATIONS WITH SITE LIGHTING.

(4) SEE PLANS FOR ARRANGEMENT OF SECTIONS.

(5) FOR MARINA VILLAGE PUMP STATION ONLY.

(6) MOUNT EMERGENCY STOP SWITCH, PROVIDED LOOSE BY GENERATOR MANUFACTURER.

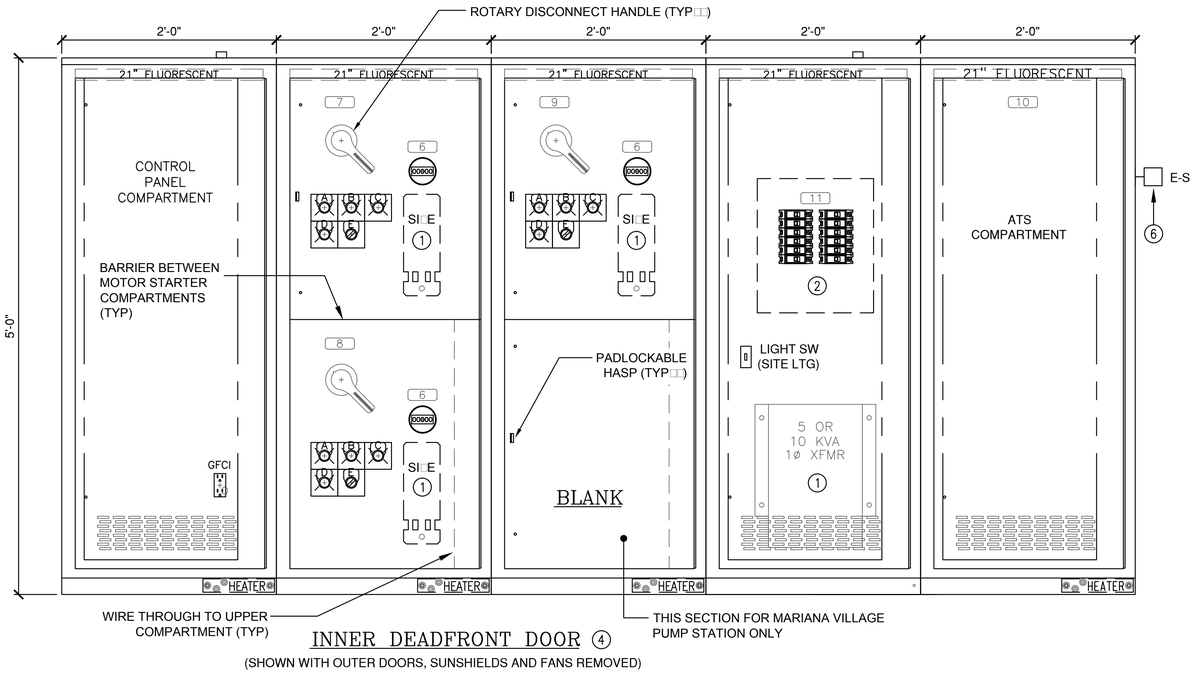

INNER DEADFRONT DOOR (4)

(SHOWN WITH OUTER DOORS, SUNSHIELDS AND FANS REMOVED)

POLY-PORC COATING SYSTEM

SHALL INCLUDE A FIVE STAGE DIP TANK METAL PREPARATION PROCESS:

1. ALKALINE CLEANER 160°F.
2. CLEAR WATER RINSE.
3. IRON PHOSPHATE APPLICATION 150°F.
4. CLEAR WATER RINSE.
5. INHIBITIVE RINSE TO SEAL PHOSPHATED SURFACES 120°F FINISHED WITH AN ELECTROSTATICALLY APPLIED DRY POLYESTER POWDER COATING THEN BAKED 380°F TO CURE.

ENCLOSURE CONSTRUCTION NOTES

1. EXTERIOR 12 GA. TYPE 316 STAINLESS STEEL AND INTERIOR 14 GA. COLD ROLLED STEEL ELECTRICALLY WELDED AND REINFORCED WHERE REQUIRED.
2. NEMA 3RX CONSTRUCTION.
3. ALL NUTS, BOLTS, SCREWS AND HINGES SHALL BE STAINLESS STEEL.
4. NUTS, BOLTS & SCREWS SHALL NOT BE VISIBLE FROM OUTSIDE OF ENCLOSURE.
5. PLASTIC NAMEPLATES SHALL BE PROVIDED AS REQUIRED.
6. CONTROL WIRING SHALL BE MARKED AT BOTH ENDS BY PERMANENT WIRE MARKERS.
7. A PLASTIC COVERED WIRING DIAGRAM SHALL BE ATTACHED TO THE INSIDE OF THE FRONT DOOR.
8. ENCLOSURE SHALL BE FACTORY WIRED AND CONFORM TO REQUIRED NEMA STANDARDS.
9. NO PAINTED EXTERIOR. INTERIOR SHALL BE POWDER COATED WHITE FINISHED PAINT COLOR.
10. ENCLOSURE SHALL BE 20" DEEP.

NO	REVISIONS	DATE	APPR
1			
2			
3			
4			
5			
6			

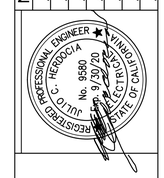

nor-cal engineers, inc.
3350 scott blvd., bldg. 11
santa clara, ca. 95054
(408) 986-8558
FAX (408) 986-9627
PROJECT NO. 18697-06

CITY OF ALAMEDA

GROUP 4 - SEWERAGE PUMP STATION RENOVATIONS FOR RELIABILITY AND SAFETY IMPROVEMENTS

MCC ELEVATION

DATE: 11/27/19
SCALE: AS SHOWN
DESIGN: JCM
DRAWN: VDM
CHECKED: JOH

DWG 9425 CASE 35

E35

63 OF **70**

File: M:\18697-06 Alameda Pumps - Group 4\60_06E35.dwg, 11/27/2019 3:39 PM, Last saved: Vuong, PlotDate: 11/27/2019 3:45 PM By: Vuong Moi, Plot scale: 1:2.5849, Plot Size: ANSI A (8.50 x 11.00 Inches)
Xrefs: SHEET_S&W_Group-4

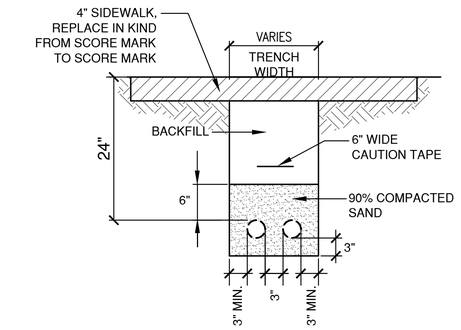

1 — TYPICAL TRENCH DETAIL
SCALE: N.T.S — SIDEWALK AREA

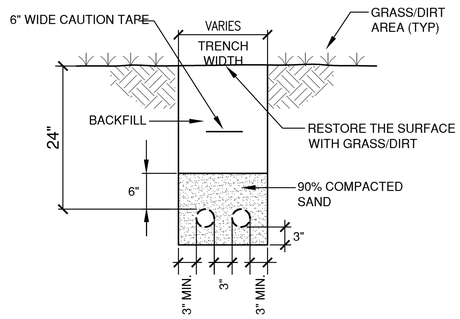

2 — TYPICAL TRENCH DETAIL
SCALE: N.T.S — GRASS/DIRT AREA

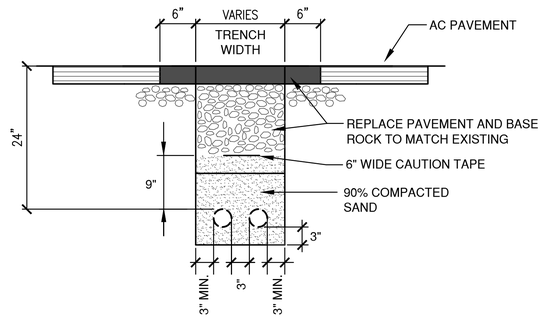

3 — TYPICAL TRENCH DETAIL
SCALE: N.T.S — PAVED AREA

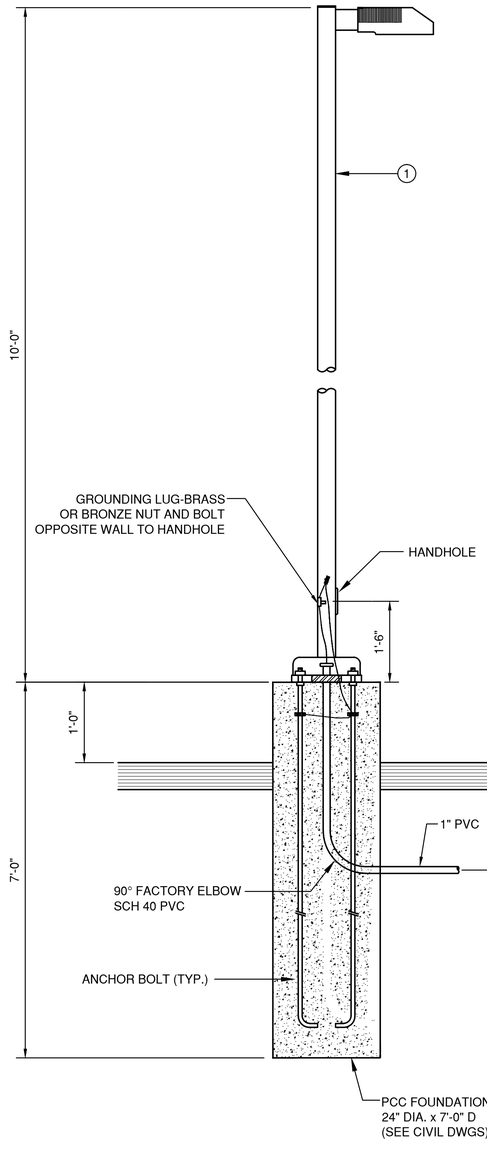

5 — LIGHT FIXTURE MOUNTING DETAIL
SCALE: N.T.S

SHEET NOTES:

1. LIGHTING FIXTURE MOUNTED ON POLE AT 10'-0".
   LIGHTING FIXTURE: KIM LIGHTING ARCHETYPE,
   CAT. # 1SA-SAR2-60L-4K-120-DB
   POLE: CAT. #PRA10-4125-SA-DB.
2. CLASS I, DIV. 1 SEALING FITTINGS WITH CLOSE NIPPLE AND INSULATED GROUNDING BUSHING.
3. 3/4" x 10'-0" L COPPER CLAD GROUNDING ROD WITH GROUND ROD CLAMP.
4. GROUND CABLE SIZE PER SINGLE LINE DIAGRAM CONNECT TO INSULATED GROUND BUSHING ON CONDUIT TO MCC.
5. DRI BOX FOR TERMINATING PRESSURE LEVEL TRANSMITTER CABLE PMC.CAT. No. TE10.

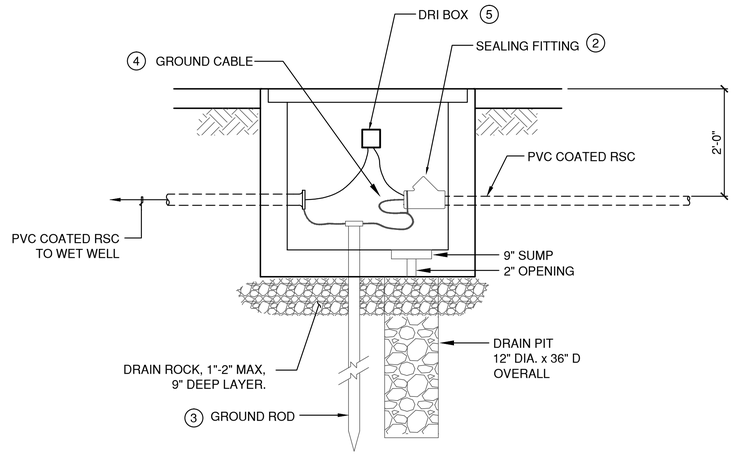

6 — PULLBOX DETAIL
SCALE: N.T.S

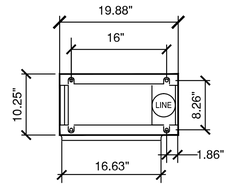

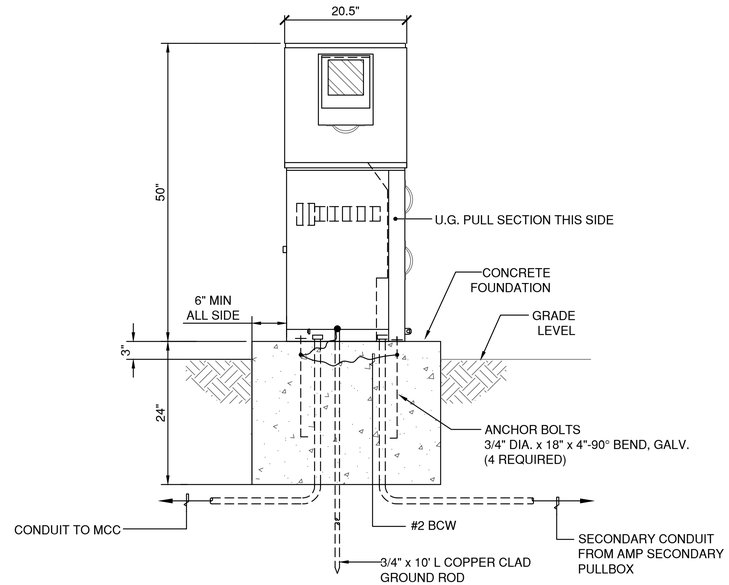

7 — SERVICE PEDESTAL DETAIL (NEMA 3RX)
SCALE: N.T.S

NO	DATE	APPR	REVISIONS
1			
2			
3			
4			
5			
6			
7			

engineers, inc.
3350 scott blvd., bldg. 11
santa clara, ca. 95054
(408) 986-8558
FAX (408) 986-9627
PROJECT NO. 18697-06

CITY OF ALAMEDA
GROUP 4 - SEWERAGE PUMP STATION RENOVATIONS FOR RELIABILITY AND SAFETY IMPROVEMENTS
MISCELLANEOUS ELECTRICAL DETAILS

DATE:	SCALE:	DESIGN:	DRAWN:	CHECKED:
11/27/19	AS SHOWN	JCH	VDM	JCH

DWG 9425 CASE 35

E36

64 OF 70

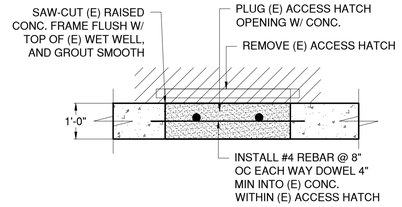

ACCESS HATCH DEMOLITION DETAIL 1 D1

SCALE: NTS

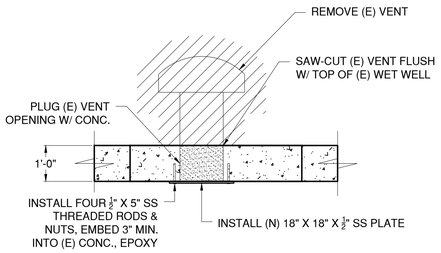

AIR VENT DEMOLITION DETAIL 2 D1

SCALE: NTS

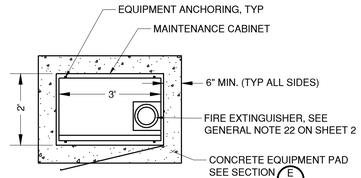

NOTES:
1. MAINTENANCE CABINET SHALL BE 3 FEET TALL.
2. MAINTENANCE CABINET SHALL MEET THE SPECIFICATIONS OF THE CONTROL PANEL AS DESCRIBED IN SPECIFICATION SECTION 16901.
3. ANCHORAGE OF THE CABINET SHALL BE DESIGNED BY THE MANUFACTURER. MANUFACTURER SHALL SUBMIT DRAWINGS AND CALCULATIONS FOR THE EQUIPMENT ANCHORAGE FOR REVIEW AND APPROVAL BY THE ENGINEER PRIOR TO INSTALLATION OF THE EQUIPMENT. SEE PROJECT SPECIFICATIONS FOR SEISMIC DESIGN CRITERIA.
4. EXTINGUISHER SHALL BE MOUNTED TO THE INSIDE WALL OF THE MAINTENANCE CABINET PER THE MANUFACTURERS RECOMMENDATIONS. PENETRATIONS THROUGH NEW CABINET SHALL MEET THE ASSOCIATED SPECIFICATION REQUIREMENTS.

MAINTENANCE CABINET DETAIL 5 D1

SCALE: NTS

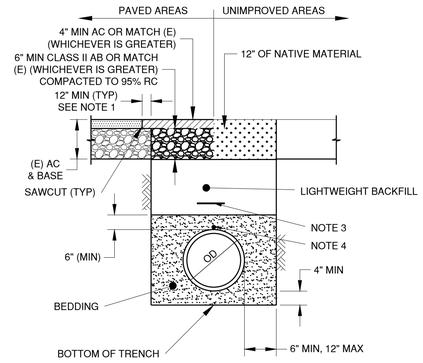

NOTES:

1. THE 12" BENCH SECTION FOR A.C. SHALL BE CUT AND REMOVED PRIOR TO FINISH PAVING OPERATIONS.
2. AT PAVED AREAS, UPPER 6" OF SOIL SUBGRADE MUST BE COMPACTED TO AT LEAST 95% OF MAX DRY DENSITY AND NEAR OPTIMUM MOISTURE CONTENT IN ACCORDANCE TO ASTM D1557.
3. INSTALL WARNING TAPE 18" ABOVE SSFM.
4. #8 AWG COPPER TRACER WIRE. TAPE TO TOP OF PIPE AT 6' MAX INTERVALS.
5. REFER TO PLAN SHEETS FOR AREAS AND DETAILS OF SURFACES TO BE IMPROVED W/ CONCRETE.

TRENCH BACKFILL AND PAVEMENT REPLACEMENT 8 D1

SCALE: NTS

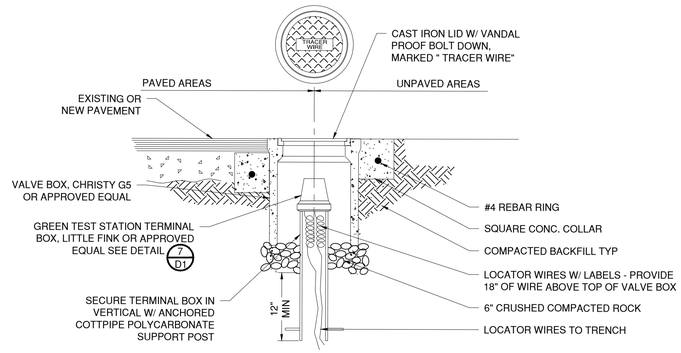

TRACER WIRE BOX DETAIL 10 D1

SCALE: NTS

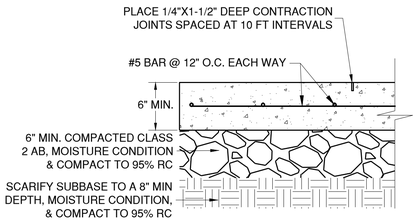

NOTES:
1. PROVIDE 1/2" X 12" SLIP DOWELS AT 5' MAX O.C. AT SLAB TO SIDEWALK CONNECTION IF POURED SEPARATELY.
2. PROVIDE EXPANSION JOINT BETWEEN CONCRETE SLAB AND CONCRETE STRUCTURES.
3. SLOPE CONCRETE TO DRAIN AWAY FROM WET WELL AND VAULTS.

CONCRETE ACCESS PAD 3 D1

SCALE: NTS

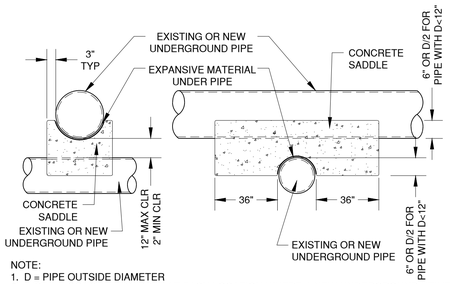

NOTE:
1. D = PIPE OUTSIDE DIAMETER
2. INSTALL CONCRETE SADDLE AT EACH LOCATION WHERE A NEW UNDERGROUND UTILITY CROSSES WITHIN 12" OF AN EXISTING UTILITY. MINIMUM ALLOWABLE CLEARANCE IS 2". A 6-SACK CONCRETE MIX SHALL BE USED FOR THE SADDLE.

CONCRETE SADDLE DETAIL 6 D1

SCALE: NTS

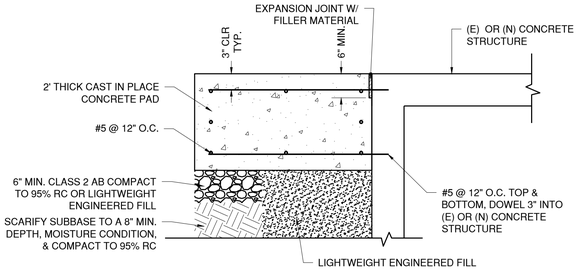

CONCRETE PAD 11 D1

SCALE: NTS

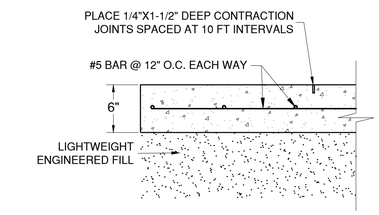

NOTES:
1. PROVIDE 1/2" X 12" SLIP DOWELS AT 5' MAX O.C. AT SLAB TO SIDEWALK CONNECTION IF POURED SEPARATELY.
2. PROVIDE EXPANSION JOINT BETWEEN CONCRETE SLAB AND CONCRETE STRUCTURES.
3. SLOPE CONCRETE TO DRAIN AWAY FROM WET WELL AND VAULTS.

ACCESS PAD OVER (E) STRUCTURE 4 D1

SCALE: NTS

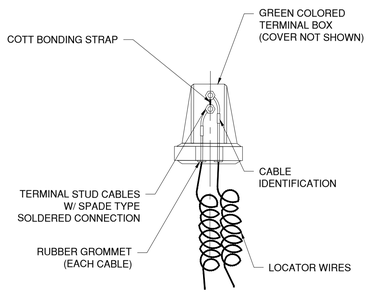

TERMINAL BOX DETAIL 7 D1

SCALE: NTS

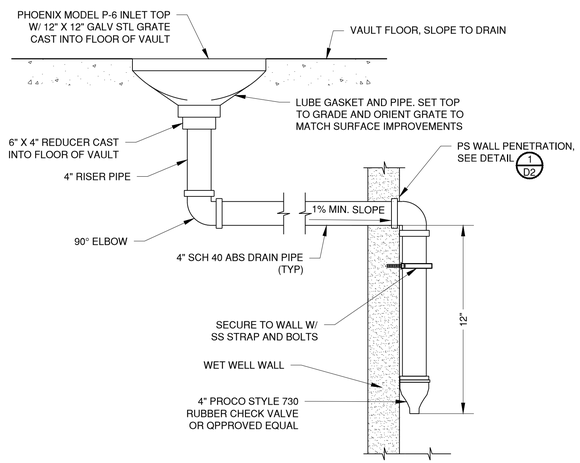

FLOOR DRAIN DETAIL 9 D1

SCALE: NTS

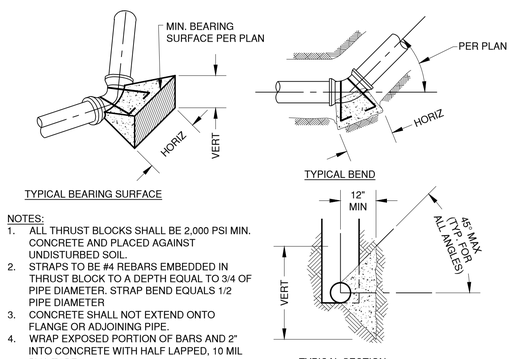

NOTES:
1. ALL THRUST BLOCKS SHALL BE 2,000 PSI MIN. CONCRETE AND PLACED AGAINST UNDISTURBED SOIL.
2. STRAPS TO BE #4 REBARS EMBEDDED IN THRUST BLOCK TO A DEPTH EQUAL TO 3/4 OF PIPE DIAMETER. STRAP BEND EQUALS 1/2 PIPE DIAMETER
3. CONCRETE SHALL NOT EXTEND ONTO FLANGE OR ADJOINING PIPE.
4. WRAP EXPOSED PORTION OF BARS AND 2" INTO CONCRETE WITH HALF LAPPED, 10 MIL PVC TAPE.

THRUST BLOCK RESTRAINT 12 D1

SCALE: NTS

NO	REVISIONS	DATE	APPR
1			
2			
3			
4			
5			
6			

Schaaf & Wheeler
CONSULTING CIVIL ENGINEERS
1171 HOMESTEAD RD. STE. 255
SANTA CLARA, CA 95050
(408) 246-4848

CITY OF ALAMEDA
GROUP 4 - SEWERAGE PUMP STATION RENOVATIONS
FOR RELIABILITY AND SAFETY IMPROVEMENTS

CIVIL DETAILS

DATE:	11/27/19
SCALE:	AS SHOWN
DESIGN:	CLP
DRAWN:	CLP
CHECKED:	BLS

DWG 9425 CASE 35

D1

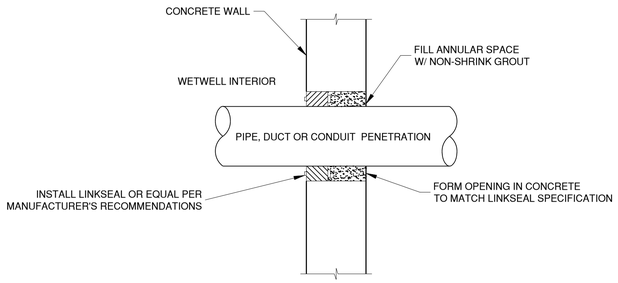

PIPE PENETRATION DETAIL 1/D2

SCALE: NTS

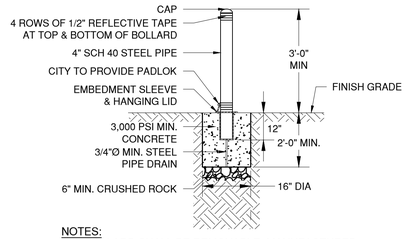

NOTES:
1. BOLLARD SHALL BE REMOVABLE, MANUFACTURED BY POST GUARD OR APPROVED EQUAL.
2. BOLLARD SHALL BE YELLOW.

BOLLARD DETAIL 2/D2

SCALE: NTS

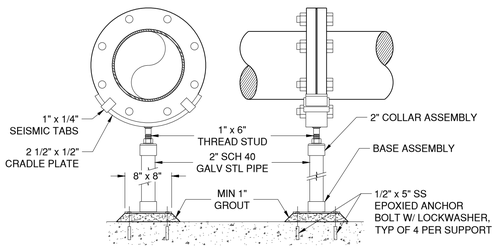

NOTE: EXPOSED PIPE FLANGE SUPPORT METAL SHALL BE HOT DIPPED GALVANIZED STEEL PER ASTM SPECIFICATION A-123.

FLANGE PIPE SUPPORT DETAIL 3/D2

SCALE: NTS

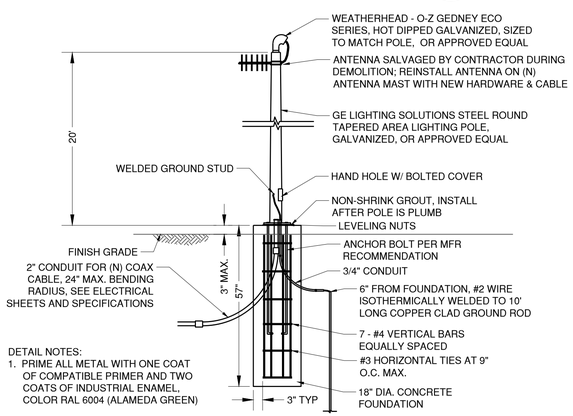

SCADA POLE DETAIL 4/D2

SCALE: NTS

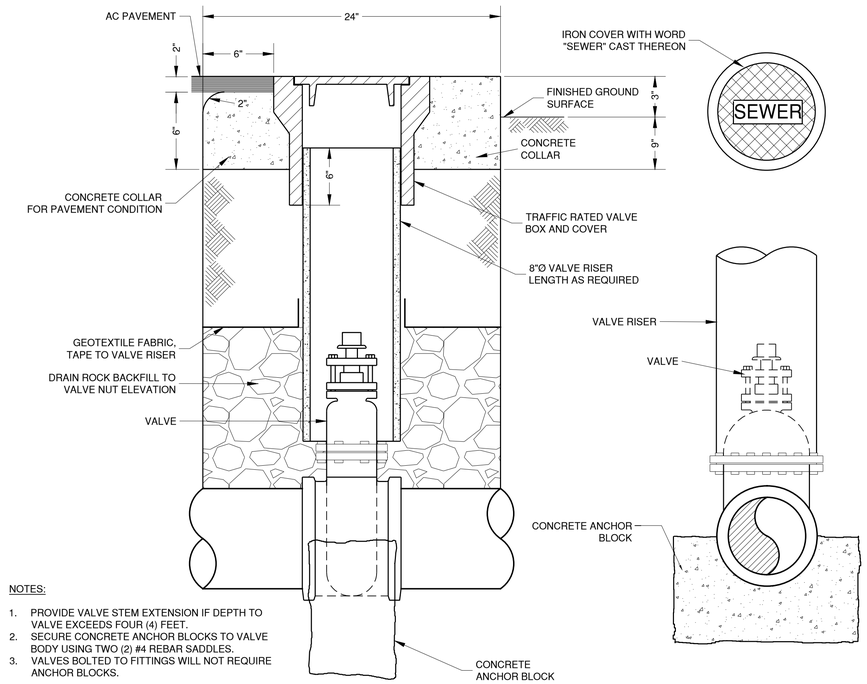

NOTES:
1. PROVIDE VALVE STEM EXTENSION IF DEPTH TO VALVE EXCEEDS FOUR (4) FEET.
2. SECURE CONCRETE ANCHOR BLOCKS TO VALVE BODY USING TWO (2) #4 REBAR SADDLES.
3. VALVES BOLTED TO FITTINGS WILL NOT REQUIRE ANCHOR BLOCKS.

VALVE BOX DETAIL 5/D2

SCALE: NTS

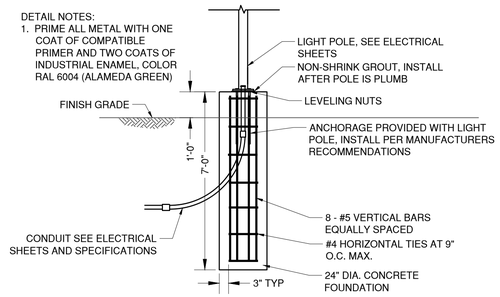

LIGHT POLE FOUNDATION DETAIL 6/D2

SCALE: NTS

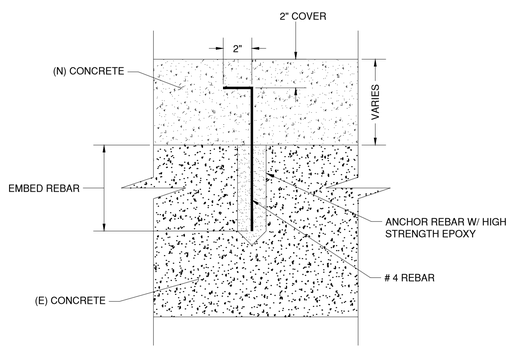

ANCHOR DETAIL 7/D2

SCALE: NTS

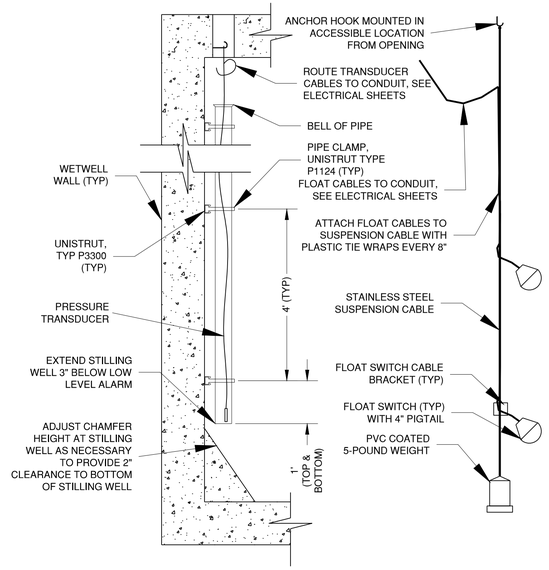

NOTES:
1. LOCATE STILLING TUBE AS SHOWN ON PUMP STATION PLANS.
2. SUPPORT STILLING WELL AS SHOWN.
3. STILLING WELL SHALL BE 2" DIAMETER SCHEDULE 80 PVC.
4. ALL MOUNTING HARDWARE SHALL BE TYPE 316 STAINLESS STEEL.
5. EXTEND STILLING TUBE TO ONE (1) FOOT BELOW WETWELL CEILING.
6. ANCHOR UNISTRUT TO CONCRETE WALLS W/ ½" X 5" EPOXY ANCHORS.
7. SEE ELECTRICAL SHEETS AND SPECIFICATIONS FOR TRANSDUCER AND FLOAT SWITCH REQUIREMENTS AND CABLE ROUTING

FLOAT SWITCH & STILLING WELL DETAIL 8/D2

SCALE: NTS

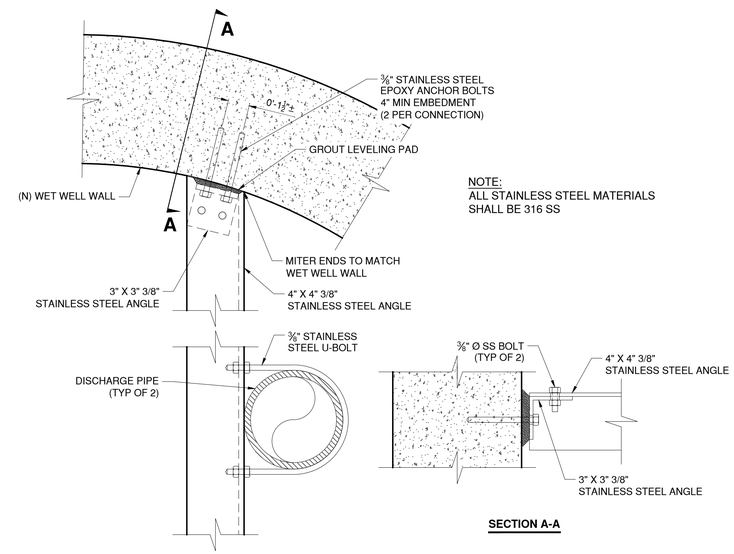

NOTE:
ALL STAINLESS STEEL MATERIALS SHALL BE 316 SS

DISCHARGE PIPE SUPPORT DETAIL 9/D2

SCALE: NTS

NO	REVISIONS	DATE	APPR
1			
2			
3			
4			
5			
6			

REGISTERED PROFESSIONAL ENGINEER · BRIAN L. SCHAAF · No. 55555 · CIVIL · STATE OF CALIFORNIA

Schaaf & Wheeler
CONSULTING CIVIL ENGINEERS
1171 HOMESTEAD RD, STE. 255
SANTA CLARA, CA 95050
(408) 246-4848

CITY OF ALAMEDA
GROUP 4 - SEWERAGE PUMP STATION RENOVATIONS FOR RELIABILITY AND SAFETY IMPROVEMENTS
CIVIL DETAILS

DATE:	11/27/19
SCALE:	AS SHOWN
DESIGN:	CLP
DRAWN:	CLP
CHECKED:	BLS

DWG 9425 CASE 35

D2

LEGEND:

1. 2" NPT SERVICE SADDLE, SMITH BLAIR 313 FOR DUCTILE IRON PIPE, OR APPROVED EQUAL
2. 2" SCH 40, SS 316, NIPPLE
3. 2" BALL VALVE, SS 316
4. 1" NIPPLE, SCH 40, SS 316
5. 2" AIR VALVE, SEE TECHNICAL SPECIFICATIONS
6. 1" 90° STREET ELL, SCH 40, SS 316
7. 1" 90° ELL, PVC
8. 1" TEE
9. 1" PVC PIPE, ROUTE TO DRAIN WETWELL
10. 2" CLEANOUT
11. 1" BALL VALVE, SS 316
12. FEMALE HOSE FITTING
13. 1" PVC PIPE

UNLESS OTHERWISE NOTED, ALL PIPING SHALL BE SCH 80 PVC W/ SOLVENT WELDED CONNECTIONS

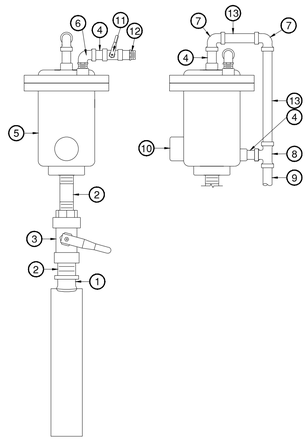

AIR RELEASE VALVE DETAIL 1/D3
SCALE: NTS

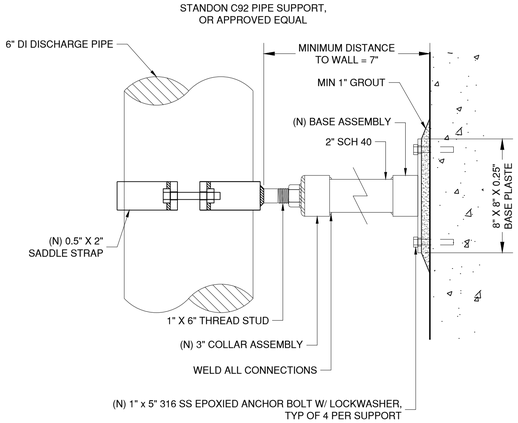

NOTE: SUPPORT SHALL BE 100% 316 SS.

PIPE SUPPORT DETAIL 4/D3
SCALE: NTS

NOTE:
1. DOWEL (N) CURB INTO (E) W/ 12" #4 REBAR, EMBED 6" INTO (E) CONCRETE

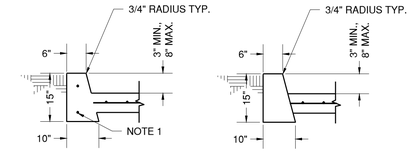

CURB 7/D3
SCALE: NTS

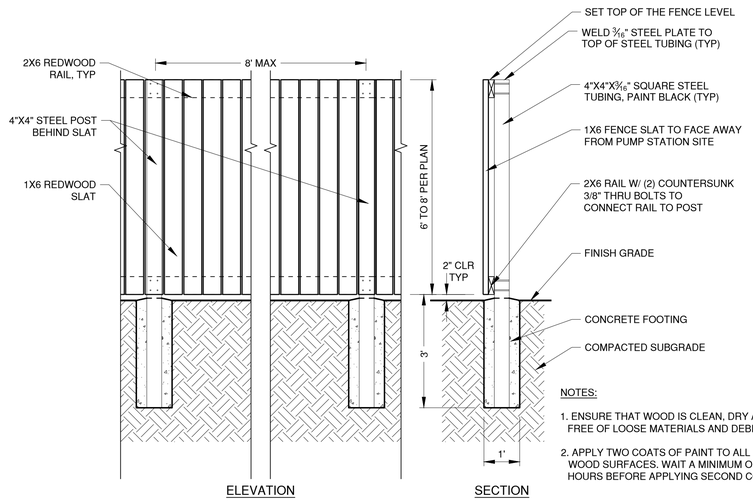

NOTES:
1. ENSURE THAT WOOD IS CLEAN, DRY AND FREE OF LOOSE MATERIALS AND DEBRIS
2. APPLY TWO COATS OF PAINT TO ALL WOOD SURFACES. WAIT A MINIMUM OF 8 HOURS BEFORE APPLYING SECOND COAT.

REDWOOD FENCE DETAIL 2/D3
SCALE: NTS

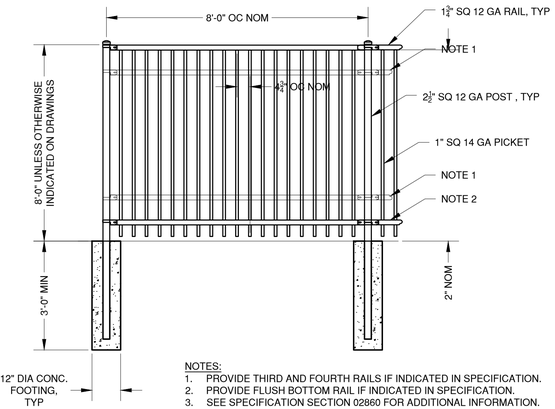

NOTES:
1. PROVIDE THIRD AND FOURTH RAILS IF INDICATED IN SPECIFICATION.
2. PROVIDE FLUSH BOTTOM RAIL IF INDICATED IN SPECIFICATION.
3. SEE SPECIFICATION SECTION 02860 FOR ADDITIONAL INFORMATION.

PICKET FENCE DETAIL 5/D3
SCALE: NTS

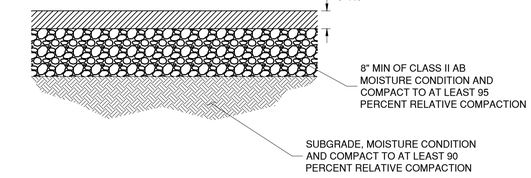

NOTE: EXISTING PAVEMENT WHICH IS TO BE JOINED BY NEW PAVEMENT SHALL BE SAW CUT VERTICALLY TO PROVIDE STRAIGHT, TRUE, AND NEAT JOINTS. THE VERTICAL EDGES SHALL BE TACKED PRIOR TO PAVING.

SITE AC PAVING DETAIL 8/D3
SCALE: NTS

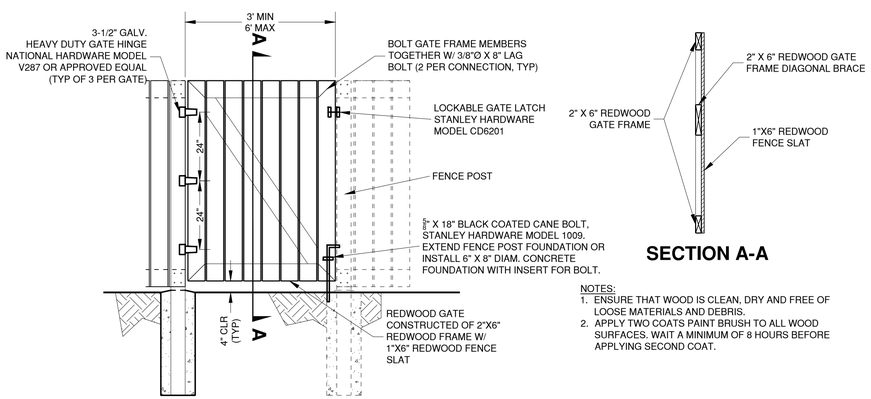

NOTES:
1. ENSURE THAT WOOD IS CLEAN, DRY AND FREE OF LOOSE MATERIALS AND DEBRIS.
2. APPLY TWO COATS PAINT BRUSH TO ALL WOOD SURFACES. WAIT A MINIMUM OF 8 HOURS BEFORE APPLYING SECOND COAT.

REDWOOD SWING GATE DETAIL 3/D3
SCALE: NTS

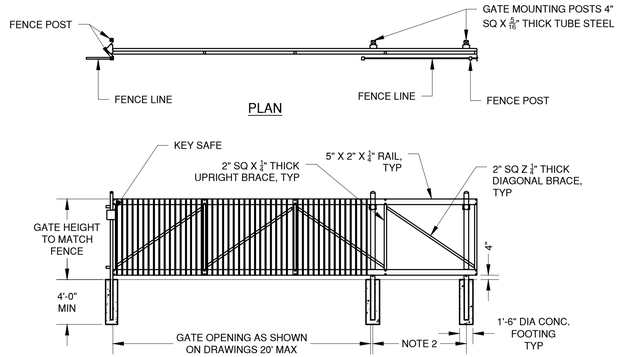

NOTES:
1. SEE SPECIFICATION SECTION 02860 FOR ADDITIONAL INFORMATION.
2. GATE MOUNTING POSTS SHALL BE SPACED IN ACCORDANCE WITH MANUFACTURER'S GUIDELINES.

ROLLING GATE FOR PICKET FENCE 6/D3
SCALE: NTS

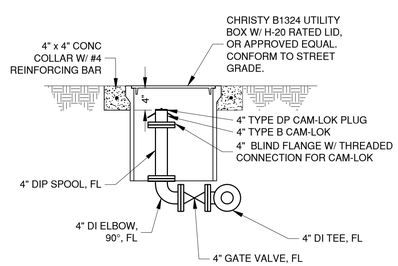

BYPASS PUMPING CONNECTION 9/D3
SCALE: NTS

NO	DATE	REVISIONS	APPR
1			
2			
3			
4			
5			
6			

Schaaf & Wheeler
CONSULTING CIVIL ENGINEERS
1171 HOMESTEAD RD, STE. 255
SANTA CLARA, CA 95050
(408) 246-4848

CITY OF ALAMEDA
GROUP 4 - SEWERAGE PUMP STATION RENOVATIONS FOR RELIABILITY AND SAFETY IMPROVEMENTS
CIVIL DETAILS

DATE:	11/27/19
SCALE:	AS SHOWN
DESIGN:	CLP
DRAWN:	CLP
CHECKED:	BLS

DWG 9425 CASE 35

D3

STRUCTURAL SPECIAL INSPECTION AND TESTING

STRUCTURAL SPECIAL INSPECTION AND TESTING

GENERAL

THESE PROVISIONS SHALL GOVERN THE QUALITY, WORKMANSHIP, AND REQUIREMENTS FOR WORK COVERED. MATERIALS OF CONSTRUCTION AND TESTS SHALL CONFORM TO THE APPLICABLE STANDARDS LISTED. THE CONTRACTOR SHALL PROVIDE A MINIMUM 48 HOUR NOTICE TO THE SPECIAL INSPECTION AGENCY FOR WORK THAT REQUIRES SPECIAL INSPECTION. THE CONTRACTOR SHALL PROVIDE THE SPECIAL INSPECTOR WITH THE USE OF A LIFT OR OTHER EQUIPMENT AS REQUIRED TO ALLOW ACCESS TO THE WORK THAT REQUIRES INSPECTION. THE CONTRACTOR SHALL PROVIDE THE SPECIAL INSPECTOR ACCESS TO THE APPROVED PLANS AND SPECIFICATIONS AND RETAIN SPECIAL INSPECTION RECORDS AT THE JOB-SITE.

DEFINITIONS

CONTINUOUS SPECIAL INSPECTION: THE FULL-TIME OBSERVATION OF WORK REQUIRING SPECIAL INSPECTION BY AN APPROVED SPECIAL INSPECTOR WHO IS PRESENT IN THE AREA WHERE THE WORK IS BEING PERFORMED.

PERIODIC SPECIAL INSPECTION: THE PART-TIME OR INTERMITTENT OBSERVATION OF WORK REQUIRING SPECIAL INSPECTION BY AN APPROVED SPECIAL INSPECTOR WHO IS PRESENT IN THE AREA WHERE THE WORK HAS BEEN OR IS BEING PERFORMED AND AT THE COMPLETION OF THE WORK.

REFERENCE STANDARDS (EDITIONS ADOPTED BY CURRENT GOVERNING CALIFORNIA BUILDING CODE)

- CBC – CALIFORNIA BUILDING CODE 2016
- AISC 341 – SEISMIC PROVISIONS FOR STRUCTURAL STEEL BUILDINGS; AMERICAN INSTITUTE OF STEEL CONSTRUCTION
- AISC 360 – SPECIFICATION FOR STRUCTURAL STEEL BUILDINGS; AMERICAN INSTITUTE OF STEEL CONSTRUCTION INC
- ACI 318 – BUILDING CODE REQUIREMENTS FOR STRUCTURAL CONCRETE AND COMMENTARY; AMERICAN CONCRETE INSTITUTE
- RCSC – SPECIFICATION FOR STRUCTURAL JOINTS USING ASTM A325 OR A490 BOLTS; RESEARCH COUNCIL ON STRUCTURAL CONNECTIONS
- AWS – AMERICAN WELDING SOCIETY
- ASTM – ASTM INTERNATIONAL
- TMS 402-13/602-13 BUILDING CODE REQUIREMENTS AND SPECIFICATIONS FOR MASONRY STRUCTURES

REPORT REQUIREMENTS

SPECIAL INSPECTORS SHALL KEEP RECORDS OF INSPECTIONS, AND SHALL FURNISH INSPECTION REPORTS TO THE BUILDING OFFICIAL AND TO THE REGISTERED DESIGN PROFESSIONAL IN RESPONSIBLE CHARGE. REPORTS SHALL INDICATE THAT THE WORK INSPECTED WAS OR WAS NOT COMPLETED IN CONFORMANCE TO THE APPROVED CONSTRUCTION DOCUMENTS. DISCREPANCIES SHALL BE BROUGHT TO THE IMMEDIATE ATTENTION OF THE CONTRACTOR FOR CORRECTION. IF THEY ARE NOT CORRECTED, THE DISCREPANCIES SHALL BE BROUGHT TO THE ATTENTION OF THE BUILDING OFFICIAL AND TO THE REGISTERED DESIGN PROFESSIONAL IN RESPONSIBLE CHARGE PRIOR TO THE COMPLETION OF THAT PHASE OF THE WORK. A FINAL REPORT DOCUMENTING THE REQUIRED SPECIAL INSPECTIONS AND CORRECTION OF ANY DISCREPANCIES NOTED IN THE INSPECTIONS SHALL BE SUBMITTED AT A POINT IN TIME AGREED UPON PRIOR TO THE START OF THE WORK BY THE PERMIT APPLICANT AND THE BUILDING OFFICIAL.

SCHEDULE OF STRUCTURAL INSPECTION AND TESTING	REFERENCE STANDARDS
STEEL	
* HIGH-STRENGTH BOLTS, NUTS, AND WASHERS:	
– CONFIRM IDENTIFICATION MARKINGS, LUBRICATION AND STORAGE CONFORM TO ASTM STANDARDS SPECIFIED IN THE APPROVED CONSTRUCTION DOCUMENTS	AISC 360 N6
– PERIODICALLY INSPECT FAYING SURFACES OF SLIP-CRITICAL JOINTS	RCSC 9.3
– REVIEW MANUFACTURER'S CERTIFICATE OF COMPLIANCE INCLUDING MATERIAL IDENTIFICATION AND TESTING DATA	
– PERIODICALLY INSPECT ALL CONNECTIONS AT SNUG TIGHT CONDITION	AISC 360 N5.6, RCSC 9.1
*STRUCTURAL STEEL:	
– CONFIRM IDENTIFICATION MARKINGS CONFORM TO ASTM STANDARDS SPECIFIED IN THE APPROVED CONSTRUCTION DOCUMENTS	AISC 360 N5.2
– REVIEW MANUFACTURER'S CERTIFICATE OF COMPLIANCE INCLUDING CERTIFIED TEST REPORTS	
– PERIODICALLY INSPECT STEEL CONNECTION DETAILS FOR COMPLIANCE WITH THE DETAILS SHOWN ON THE APPROVED CONSTRUCTION DOCUMENTS	AISC 360 & AISC 341
CONCRETE	CBC 1705.3, CBC 1705A.3 CBC TABLE 1705.2.1
* CONCRETE	
– REVIEW CERTIFIED MILL TEST REPORTS FOR REINFORCING STEEL	CBC 1705.3
– PERIODICALLY INSPECT REINFORCING STEEL AND PLACEMENT	ACI 318 CH 20, 25.2, 25.3, 26.6.1–26.6.3 CBC 1705.3
– PERIODICALLY INSPECT ANCHOR RODS AND ANCHOR BOLTS PRIOR TO CONCRETE PLACEMENT	CBC 1705.3
– VERIFY USE OF ENGINEER OF RECORD REVIEWED MIX DESIGN AND MATERIAL CERTIFICATE	ACI 318 CH.19, 26.4.3, 26.4.4
– CONTINUOUSLY INSPECT CONCRETE PLACEMENT	
– PERIODICALLY INSPECT CURING MATERIAL FOR CONFORMANCE WITH APPROVED CONTRACT DOCUMENTS AND PLACEMENT	
– PERIODICALLY INSPECT FORMWORK FOR SHAPE, LOCATION AND DIMENSIONS	ACI 318: 2.6.11.1.2 (b)
– FABRICATE 6" DIAMETER X 12" CYLINDER TEST SPECIMENS	ACI 318 26.4, 26.12, ASTM C31
– PERFORM SLUMP TESTING AT THE TIME CONCRETE IS SAMPLED	ASTM C143
– PERFORM AIR CONTENT TESTING AT THE TIME CONCRETE IS SAMPLED	ASTM C173
– RECORD TEMPERATURE OF CONCRETE AT THE TIME CONCRETE IS SAMPLED	ASTM C1064
– PERFORM CONCRETE COMPRESSION TESTING	ASTM C39
POST-INSTALLED ANCHORS	
* ADHESIVE ANCHORS AND POST-INSTALLED REINFORCING BAR CONNECTION IN CONCRETE OR REINFORCED MASONRY	
– PERIODICALLY INSPECT ANCHOR/BAR TYPE, DIAMETER, LENGTH AND CLEANLINESS	
– PERIODICALLY INSPECT ADHESIVE PRODUCT NAME AND EXPIRATION	
– PERIODICALLY INSPECT HOLE LOCATION, DIAMETER, DEPTH AND CLEANLINESS	
– PERIODICALLY INSPECT ANCHOR/BAR EMBEDMENT, SPACING AND EDGE DISTANCE	
– PERIODICALLY INSPECT ADHERENCE TO MANUFACTURER'S PRINTED INSTALLATION INSTRUCTIONS	
– PERIODICALLY INSPECT SUBSTRATE TEMPERATURE AT TIME OF INSTALLATION	
– PERIODICALLY INSPECT ADHESIVE AND ANCHOR/BAR INSTALLATION PER ICC/IAPMO EVALUATION REPORT	
– CONTINUOUSLY INSPECT ANCHOR/BAR INSTALLED HORIZONTALLY OR UPWARDLY INCLINED THAT RESIST SUSTAINED TENSION LOADS	
– TEST 10% OF ANCHORS USED FOR PIPE SUPPORT BOLTING WITH A HYDRAULIC JACK OR SPRING LOADED DEVICE FOR A MINIMUM OF 15 SECONDS PER TEST LOADS SHOWN ON APPROVED CONSTRUCTION DOCUMENTS. IF ANY ANCHOR FAILS TESTING, TEST ALL INSTALLED BUT NOT PREVIOUSLY TESTED ANCHORS, UNTIL 20 CONSECUTIVE ANCHORS PASS, THEN RESUME THE INITIAL TEST FREQUENCY	CBC 1909.2.7.3
* EXPANSION/UNDERCUT ANCHORS IN CONCRETE OR REINFORCED MASONRY	
– PERIODICALLY INSPECT ANCHOR TYPE, DIAMETER, LENGTH AND CLEANLINESS	
– PERIODICALLY INSPECT DRILL BIT COMPLIANCE	
– PERIODICALLY INSPECT HOLE LOCATION, DIAMETER, DEPTH AND CLEANLINESS	
– PERIODICALLY INSPECT ANCHOR EMBEDMENT, SPACING, AND EDGE DISTANCE	
– PERIODICALLY INSPECT ADHERENCE TO MANUFACTURER'S PRINTED INSTALLATION INSTRUCTIONS	
– PERIODICALLY INSPECT ANCHOR TIGHTENING TORQUE WITH CALIBRATED TORQUE WRENCH (IMPORTANT: VERIFY WITH ICC/IAPMO REPORT WHETHER MAXIMUM OR MINIMUM TORQUE)	
– CONTINUOUSLY INSPECT ANCHOR INSTALLATION PER ICC/IAPMO EVALUATION REPORT	
– TEST 50% OF ANCHORS USED FOR EQUIPMENT ANCHORAGE WITH A CALIBRATED TORQUE WRENCH TO THE TORQUE STATED IN THE ICC – ES EVALUATION REPORT. IF ANY ANCHOR FAILS TESTING, TEST ALL INSTALLED BUT NOT PREVIOUSLY TESTED ANCHORS, UNTIL 20 CONSECUTIVE ANCHORS PASS, THEN RESUME THE INITIAL TEST FREQUENCY	CBC 1909.2.7.3

SYMBOLS

Symbol	Meaning
1 (upper half of circle)	SECTION LETTER OR DETAIL NUMBER.
S2 (lower half of circle)	SHEET NUMBER WHERE SECTION OR DETAIL IS SHOWN.
(solid double line)	INDICATES CONCRETE ABOVE.
(dashed double line)	INDICATES CONCRETE BELOW.
[-10'-0"]	INDICATES TOP OF FOOTING ELEVATION.
⟶	INDICATES DIRECTION OF SLOPE.
±	INDICATES AN APPROXIMATE DIMENSION OR ELEVATION. THE CONTRACTOR IS TO VERIFY INFORMATION AS REQUIRED TO COMPLETE CONSTRUCTION.

GENERAL NOTES

STRUCTURAL OBSERVATION

THE ENGINEER RESPONSIBLE FOR THE STRUCTURAL DESIGN SHALL PERFORM STRUCTURAL OBSERVATION AS DEFINED IN SECTION 1702 OF THE CALIFORNIA BUILDING CODE. OBSERVED DEFICIENCIES SHALL BE REPORTED IN WRITING TO THE OWNER'S REPRESENTATIVE, SPECIAL INSPECTOR, CONTRACTOR, AND THE BUILDING OFFICIAL. THE STRUCTURAL OBSERVER SHALL SUBMIT TO THE BUILDING OFFICIAL A WRITTEN STATEMENT THAT THE SITE VISITS HAVE BEEN MADE AND IDENTIFY ANY REPORTED DEFICIENCIES WHICH, TO THE BEST OF THE STRUCTURAL OBSERVER'S KNOWLEDGE, HAVE NOT BEEN RESOLVED. STRUCTURAL ENGINEER WEEKLY. THE SCHEDULE SHALL SHOW PROJECTED WORK TO BE PERFORMED THE CITY OF ALAMEDA REQUIRES THE FOLLOWING STAGES OF CONSTRUCTION OBSERVED AND STRUCTURE SHALL REMAIN EXPOSED AND ACCESSIBLE UNTIL THE STRUCTURAL EMGINEER OR THE STRUCTURAL ENGINEER'S DESIGNATED REPRESENTATIVE HAS REVIEWED THEM FOR CORRECTNESS AND QUALITY OF WORKMANSHIP.

FOUNDATION:

– AFTER PLACEMENT OF FOUNDATION REINFORCEMENT

OTHER ITEMS NOT LISTED ABOVE MAY BE DETERMINED BY THE ENGINEER DURING CONSTRUCTION AS REQUIRING STRUCTURAL OBSERVATION.

NOTES: THE CONTRACTOR SHALL NOTIFY THE ENGINEER AT LEAST 48 HOURS PRIOR TO COVERING UP ABOVE ITEMS OF CONSTRUCTION.

CONSTRUCTION LIABILITY

THE CONSTRUCTION CONTRACTOR AND HIS SUBCONTRACTORS AGREE THAT IN ACCORDANCE WITH GENERALLY ACCEPTED CONSTRUCTION PRACTICES, THE CONSTRUCTION CONTRACTOR AND HIS SUBCONTRACTORS WILL BE REQUIRED TO ASSUME SOLE AND COMPLETE RESPONSIBILITY FOR JOB SITE CONDITIONS DURING THE COURSE OF CONSTRUCTION OF THE PROJECT, INCLUDING SAFETY OF ALL PERSONS AND PROPERTY; THAT THIS REQUIREMENT SHALL BE MADE TO APPLY CONTINUOUSLY AND NOT LIMITED TO NORMAL WORKING HOURS, AND THE CONSTRUCTION CONTRACTOR AND HIS SUBCONTRACTORS FURTHER AGREE TO DEFEND, INDEMNIFY AND HOLD THE DESIGN PROFESSIONAL HARMLESS FROM ANY AND ALL LIABILITY, REAL OR ALLEGED, IN CONNECTION WITH THE PERFORMANCE OF WORK ON THIS PROJECT, EXCEPT LIABILITY ARISING FROM THE SOLE NEGLIGENCE OF THE DESIGN PROFESSIONAL.

DETAILS

NOTES:

1. CONTRACTOR TO VERIFY ALL DIMENSIONS AND ELEVATIONS IN THE FIELD AND INFORM BOTH CIVIL ENGINEER AND STRUCTURAL ENGINEER OF ANY DISCREPANCIES BEFORE PROCEEDING WITH CONSTRUCTION.
2. SEE CIVIL DRAWINGS FOR LOCATION OF PIPE AND FOR CALLOUTS OF STRUCTURAL SECTIONS AND DETAILS.
3. ALL STEEL MEMBERS SHALL BE GALVANIZED.

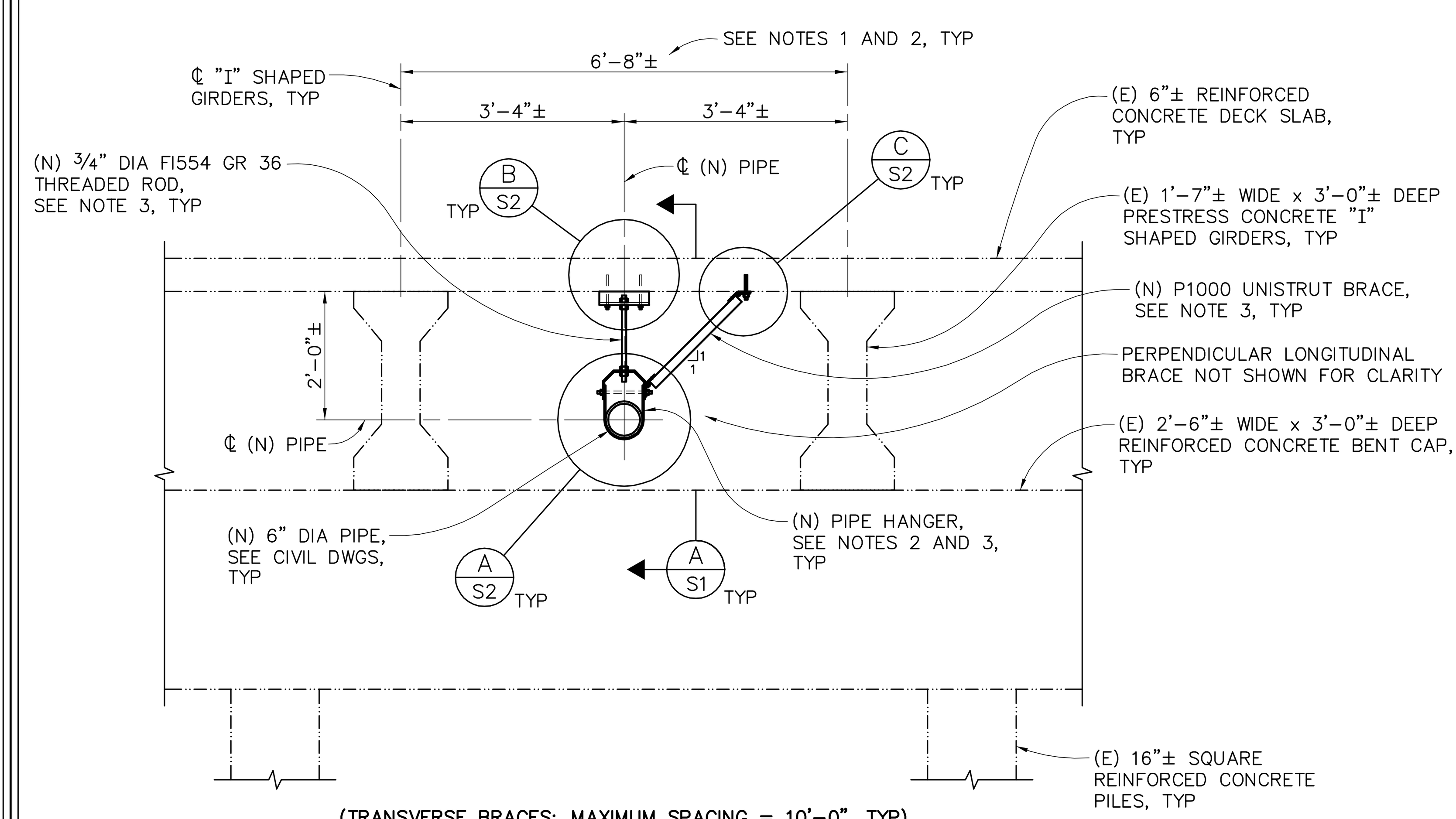

(TRANSVERSE BRACES; MAXIMUM SPACING = 10'-0", TYP)

DETAIL 1/S1
1/2" = 1'-0"

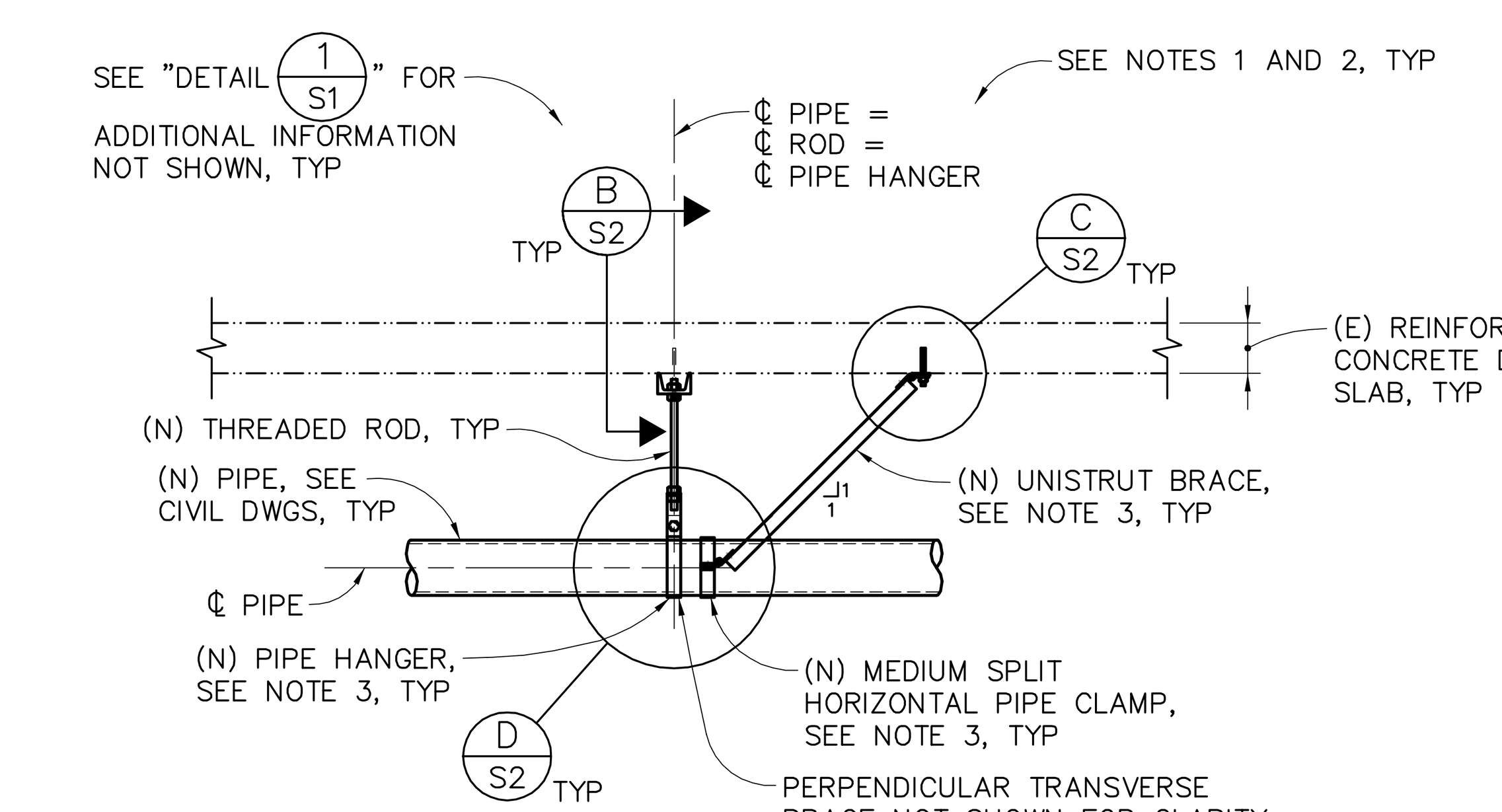

(LONGITUDINAL BRACING)

SECTION A/S1
1/2" = 1'-0"

ABBREVIATIONS

@	AT	MAX	MAXIMUM
⌀	DIAMETER	MIN	MINIMUM
#	NUMBER	MISC	MISCELLANEOUS
BOT	BOTTOM	(N)	NEW
BOF	BOTTOM OF FOOTING	No.	NUMBER
℄	CENTER LINE	OC	ON CENTER
CBC	CALIFORNIA BLDG CODE	℘	METAL PLATE
CLR	CLEAR	PSF	POUNDS PER SQUARE FOOT
CONC	CONCRETE	PSI	POUNDS PER SQUARE INCH
DWG	DRAWING	REINF	REINFORCED, REINFORCING
(E)	EXISTING	STRUCT	STRUCTURAL
EA	EACH	SYM	SYMMETRICAL
EL	ELEVATION	T.O.	TOP OF
EQ	EQUAL	TOF	TOP OF FOOTING
EW	EACH WAY	TOS	TOP OF SLAB OR STEEL
FTG	FOOTING	TYP	TYPICAL
IBC	INTERNATIONAL BLDG CODE	UON	UNLESS OTHERWISE NOTED
		VERT	VERTICAL
		W/	WITH

PROJECT DATA

1. PLANS AND CALCULATIONS FOR THE STRUCTURAL DESIGN WERE BASED UPON:
   - THE 2016 CALIFORNIA BUILDING CODE.
   - ASCE/SEI 7-10
   - ACI 318-14
2. DESIGN LOADS ARE AS FOLLOWS:

VERTICAL

DEAD LOAD — WEIGHTS:

6" DIA HDPE, DUCTILE IRON PIPE	=	15 LB/FT
WEIGHT OF WATER IN DUCTILE IRON PIPE	=	16 LB/FT
TOTAL	=	31 LB/FT

LIVE LOAD — 40 PSF

SEISMIC

PER ASCE 7-10 — HORIZONTAL

OCCUPANCY CATEGORY I

SEISMIC IMPORTANCE FACTOR, I = 1.0

SOIL SITE CLASS D

$S_S = 1.5 \quad S_1 = 0.6$

$S_{DS} = 1.0 \quad S_{D1} = 0.6$

$$F_p = \frac{0.4\,(a_p)(S_{DS})}{(R_p / I_p)}\,(W_p)(1+2(z/h)),\ \text{(LRFD)}$$

$F_{p(MAX)} = 1.6\,(S_{DS})(I_p)(W_p)$

$F_{p(MIN)} = (0.3)(S_{DS})(I_p)(W_p)$

a_p = 2.5 HDPE, DUCTILE IRON PIPE
= 2.5 GENERATOR
= 6.0 MOTOR CONTROL CENTER
= 1.5 SERVICE PEDESTAL

R_p = 3.0 HDPE, DUCTILE IRON PIPE
= 1.0 GENERATOR
= 2.5 MOTOR CONTROL CENTER
= 1.0 SERVICE PEDESTAL

I_p = 1.0

z = HEIGHT OF PIPE CENTROID W/ RESPECT TO GROUND

h = HEIGHT OF PIPE

Z/h = 1.0

W_p = WEIGHT OF PIPE/EQUIPMENT

DESIGN FORCES:
$F_p = 1.0\ W_p$ (DUCTILE IRON PIPE)
$F_p = 0.48\ W_p$ (FOR GENERATOR)
$F_p = 0.50\ W_p$ (FOR MOTOR CONTROL CENTER)
$F_p = 0.80\ W_p$ (FOR SERVICE PEDESTAL)

VERTICAL $= 0.2\,(S_{DS})\,W_p$
$= 0.2\ W_p$

FOUNDATION

BEARING PRESSURES
1,500 PSF DEAD LOAD + LIVE LOADS
2,000 PSF TOTAL LOADS

3. MATERIAL PROPERTIES

REINFORCED CONCRETE

REINF ASTM DESIGNATION

fy	60,000 PSI	(NEW REINFORCEMENT)
f's	20,000 PSI	(EXISTING REINFORCEMENT)
f'c	3,000 PSI	(NEW CONCRETE)
	3,000 PSI	(EXISTING CONCRETE)
	5,000 PSI	(PRESTRESS CONCRETE)

STEEL (ALL STEEL SHALL BE GALVANIZED, UON)

MC CHANNELS	ASTM A36, FY = 36 ksi
PLATES AND BARS	ASTM A36, FY = 36 ksi
MECHANICAL ANCHORS	STAINLESS STEEL
UNISTRUT MEMBERS AND CONNECTORS	GALVANIZED
THREADED RODS	ASTM F1554, GR36

STRUCTURAL DRAWING INDEX

S1 PROJECT DATA AND GENERAL NOTES
S2 SECTIONS AND DETAILS

NO	REVISIONS	DATE	APPR
1			
2			
3			
4			
5			
6			
7			

REGISTERED PROFESSIONAL ENGINEER ANTHONY P. NOTARO No. C51739 Exp. 6/30/20 CIVIL STATE OF CALIFORNIA

BIGGS CARDOSA ASSOCIATES INC
STRUCTURAL ENGINEERS
865 The Alameda
San Jose, California 95126
408-296-5515

ONLY THE MOST CURRENT WET SIGNED DOCUMENTS CONSTITUTE THE PROFESSIONAL WORK OF BIGGS CARDOSA ASSOCIATES, INC. IF THERE ARE ANY DIFFERENCES BETWEEN THE MOST CURRENT WET SIGNED DOCUMENTS AND EARLIER OR NOT WET SIGNED VERSIONS OF THE DOCUMENTS, THE MOST CURRENT WET SIGNED DOCUMENTS SHALL GOVERN. BIGGS CARDOSA ASSOCIATES, INC. IS NOT RESPONSIBLE FOR ANY MODIFICATIONS MADE TO OUR DOCUMENTS BY ANYONE OTHER THAN THE ENGINEER OF RECORD FOR BIGGS CARDOSA ASSOCIATES, INC.

CITY OF ALAMEDA
GROUP 4 - SEWERAGE PUMP STATION RENOVATIONS FOR RELIABILITY AND SAFETY IMPROVEMENTS

PROJECT DATA AND GENERAL NOTES

DATE: 11/27/19
SCALE: AS SHOWN
DESIGN: FJC
DRAWN: RLQ
CHECKED: APN

W:\2019\2019194\2019194S1.dwg, 11/22/2019 3:39 PM

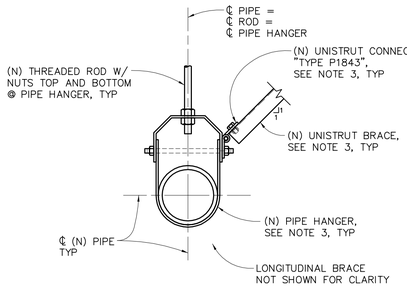

SECTION A S2
1½" = 1'-0"

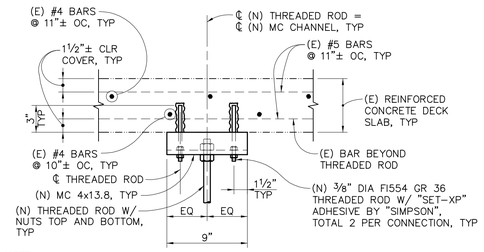

NOTE:
CONTRACTOR SHALL SCAN AND LOCATE (E) REINFORCEMENT WITHIN (E) DECK SLAB PRIOR TO DRILLING TO INSTALL THREADED RODS OR MECHANICAL ANCHORS. IF REINFORCEMENT IS ENCOUNTERED DURING DRILLING, ABANDON AND SHIFT THE HOLE LOCATION TO AVOID THE REINFORCEMENT. PROVIDE A MINIMUM OF 2 ANCHOR DIAMETERS OR 1 INCH, WHICHEVER IS LARGER, OF SOUND CONCRETE BETWEEN THE ANCHOR AND THE ABANDONED HOLE. FILL THE ABANDONED HOLE WITH NON-SHRINK GROUT. IF THE ANCHOR OR DOWEL MAY NOT BE SHIFTED AS NOTED ABOVE, THE ENGINEER WILL DETERMINE A NEW LOCATION.

SECTION B S2
1½" = 1'-0"

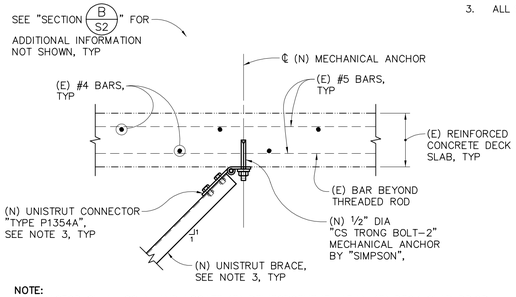

NOTE:
CONTRACTOR SHALL SCAN AND LOCATE (E) REINFORCEMENT WITHIN (E) DECK SLAB PRIOR TO DRILLING TO INSTALL THREADED RODS OR MECHANICAL ANCHORS. IF REINFORCEMENT IS ENCOUNTERED DURING DRILLING, ABANDON AND SHIFT THE HOLE LOCATION TO AVOID THE REINFORCEMENT. PROVIDE A MINIMUM OF 2 ANCHOR DIAMETERS OR 1 INCH, WHICHEVER IS LARGER, OF SOUND CONCRETE BETWEEN THE ANCHOR AND THE ABANDONED HOLE. FILL THE ABANDONED HOLE WITH NON-SHRINK GROUT. IF THE ANCHOR OR DOWEL MAY NOT BE SHIFTED AS NOTED ABOVE, THE ENGINEER WILL DETERMINE A NEW LOCATION.

SECTION C S2
1½" = 1'-0"

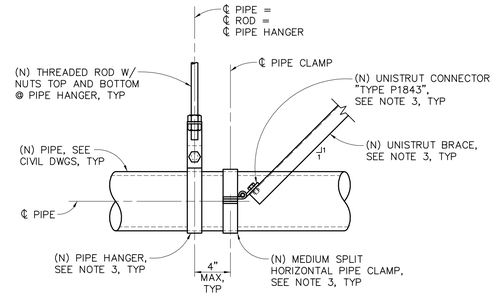

SECTION D S2
1½" = 1'-0"

GENERATOR/MOTOR CONTROL CENTER/SERVICE PEDESTAL

SECTION E S2
NO SCALE

PARU GENERATOR

SECTION F S2
NO SCALE

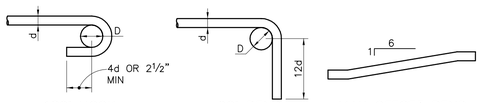

D = 6d FOR #3 THRU #8
D = 8d FOR #9 THRU #11
D = 10d FOR #14 THRU #18

PRINCIPAL REINFORCING

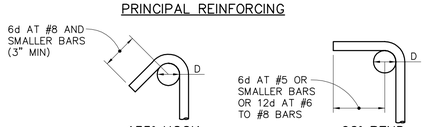

D = 4d FOR #5 AND SMALLER
D = 6d FOR #6 THRU #8
D = 8d FOR #9 THRU #11

TIES OR STIRRUPS

NOTES:
1. ALL BENDS SHALL BE MADE COLD.
2. #14 & #18 BARS SHALL BE BEND-TESTED AND APPROVED PRIOR TO BENDING.

TYPICAL BAR HOOKS & BENDS 1 S2
NO SCALE

LAP SPLICE SCHEDULE		
BAR SIZE	f'c=3000 PSI	
	BOTTOM	TOP
#3	16"	18"
#4	18"	24"
#5	24"	30"
#6	36"	42"
#7	42"	54"
#8	54"	72"
#9	66"	84"
#10	78"	102"
#11	96"	120"
WWR 6x6 – W8 MAX	8", MEASURED FROM TRANSVERSE WIRE AT EDGE OF SHEET	WWR / LAP LENGTH
WWR 12x12 – W8 MAX	14", MEASURED FROM TRANSVERSE WIRE AT EDGE OF SHEET	

NOTES:
1. LAP SPLICE LOCATIONS SHALL BE APPROVED BY THE ENGINEER.
2. THE TOP BAR LAP SPLICE SHALL BE USED FOR HORIZONTAL BARS WHERE THERE IS 12" OR MORE OF FRESH CONCRETE BELOW THE BAR. WALL HORIZONTAL BARS ARE 'TOP BARS'. WALL VERTICAL BARS ARE 'BOTTOM BARS'.
3. WHEN TWO BARS OF DIFFERENT SIZES ARE SPLICED, USE THE SHORTER LAP LENGTH.
4. STAGGER LAP SPLICES OF ADJACENT BARS BY 24".
5. INCREASE LAP SPLICE LENGTH BY A FACTOR OF 1.3 FOR EPOXY COATED TOP BARS AND 1.5 FOR EPOXY COATED BOTTOM BARS AND 1.33 FOR LIGHT WEIGHT CONCRETE.
6. MINIMUM CENTER TO CENTER BAR SPACING: 3" FOR #6 AND SMALLER, 5" FOR #7 AND LARGER. INCREASE LAP LENGTH BY A FACTOR OF 1.7 FOR SMALLER SPACING, BUT NO LESS THAN 1½" CLEAR DISTANCE FOR #8 AND SMALLER; AND 2½" CLEAR DISTANCE FOR #9 AND LARGER.

LAP SPLICE SCHEDULE 2 S2
NO SCALE

NOTES:
1. CONTRACTOR TO VERIFY ALL DIMENSIONS AND ELEVATIONS IN THE FIELD AND INFORM BOTH CIVIL ENGINEER AND STRUCTURAL ENGINEER OF ANY DISCREPANCIES BEFORE PROCEEDING WITH CONSTRUCTION.
2. SEE CIVIL DRAWINGS FOR LOCATION OF PIPE AND FOR CALLOUTS OF STRUCTURAL SECTIONS AND DETAILS.
3. ALL STEEL MEMBERS SHALL BE GALVANIZED.

NO	REVISIONS	DATE	APPR
1			
2			
3			
4			
5			
6			
7			

REGISTERED PROFESSIONAL ENGINEER — ANTHONY P. NOTARO — No. C51739 — Exp. 6/30/20 — CIVIL — STATE OF CALIFORNIA

BIGGS CARDOSA ASSOCIATES INC
STRUCTURAL ENGINEERS
865 The Alameda
San Jose, California 95126
408-296-5515

BCA'S THE MOST CURRENT ELECTRONIC CAD DOCUMENTS CONSTITUTE THE PROFESSIONAL WORK OF BIGGS CARDOSA ASSOCIATES, INC. AND SHALL NOT BE USED BY ANY PERSON FOR ANY PURPOSE OTHER THAN THAT AGREED TO IN WRITING BY BIGGS CARDOSA ASSOCIATES, INC. ALL RECIPIENTS OF BCA'S CAD DOCUMENTS, BY ACCEPTANCE OF SUCH DOCUMENTS, AGREE TO INDEMNIFY AND HOLD HARMLESS BIGGS CARDOSA ASSOCIATES, INC. FROM ANY AND ALL CLAIMS ARISING FROM THE MODIFICATION OR REUSE OF THESE DOCUMENTS BY ANYONE OTHER THAN THE ENGINEER OF RECORD FOR BIGGS CARDOSA ASSOCIATES, INC.

CITY OF ALAMEDA
GROUP 4 - SEWERAGE PUMP STATION RENOVATIONS FOR RELIABILITY AND SAFETY IMPROVEMENTS

SECTIONS AND DETAILS

DATE:	11/27/19
SCALE:	AS SHOWN
DESIGN:	FJC
DRAWN:	RLQ
CHECKED:	APN

S2

69 OF **70**

(2019194S2) 2019194

W:\2019\2019194\2019194S2.dwg, 11/22/2019 3:39 PM

GENERAL REQUIREMENTS

ALAMEDA MUNICIPAL POWER
A Department of the City of Alameda

Project Requirements Checklist
General Requirements

Questions? Contact the AMP Engineering Department at 510-748-3996, FAX: 510-748-3993

SUMMARY OF GENERAL REQUIREMENTS

Customer/Contractor is responsible for ensuring that final installations meet all City of Alameda and Alameda Municipal Power (AMP) requirements.

[X] 1. To ensure that all substructure contract work is done per AMP standards, AMP will assign an inspector during construction.

[X] 2. The owner/developer's electrical consultant shall coordinate power requirements with AMP. Failure to do so may delay project implementation.

[X] 3. AMP will charge the owner/developer for the actual cost of all expenses associated with the utility duct system engineering design, plan review, and construction inspection. An estimate of this cost for this project is $ 0 . To initiate a work order, AMP will require a check or a purchase order from the developer/customer.

[ ] 4. Per AMP's Rules and Regulations, the owner/developer shall be responsible for 60% of the installed costs of the required primary trunk cables and pad-mounted switches.

[ ] 5. AMP will require a Transformer Capacity Utilization Agreement and deposit from the customer when the new service request requires a 750 kVA or larger capacity transformer, prior to purchase of the transformer. The service size indicated will require a _____ kVA transformer and a $ .00 deposit. (For projects requiring large transformers and/or switches, developer/customer must allow for a 4 to 6-month leadtime).

[X] 6. Developer's contractor shall obtain an electrical permit from the City's Permit Center. The City of Alameda's Combination Inspector must approve electrical installation before any service will be energized.

[ ] 7. Streetlight system on public streets shall be subject to AMP's review and approval. Developer may enter into an agreement with AMP regarding maintenance and future replacement of private streetlights.

[ ] 8. AMP is presently the telephone service provider at Alameda Point. Please contact the Telecom Operations Supervisor at (510)-814-5631 for inquiries.

[ ] 9. Other Comments:
_____

#10 HARBOR BAY PARKWAY 1 PUMP STATION

ALAMEDA MUNICIPAL POWER
A Department of the City of Alameda

Project Requirements Checklist
Service Equipment Requirements

Questions? Contact the AMP Engineering Department at 510-748-3996, FAX: 510-748-3993

SUMMARY OF SERVICE EQUIPMENT REQUIREMENTS

Customer/Contractor is responsible for ensuring that final installations meet all City of Alameda and Alameda Municipal Power (AMP) requirements.

AMP will furnish and install the necessary metering CT's, PT's, and test switch. For service equipment approval, contractor/vendor must comply with all AMP and City of Alameda requirements, including those summarized below. All Service Equipment will have provisions for sealing the Meter per EUSERC requirements.

Customer/Contractor should provide Service Equipment shop drawings to AMP for review, prior to manufacture, to avoid delays due to field modifications. Final Service Equipment Submittals must be provided to, and approved by, the City of Alameda Permit Center and AMP prior to installation and connection to AMP's electrical system..

1. Service Equipment: [ ] Indoor (NEMA 1 or better) [X] Outdoor (NEMA 3R or better)
2. Service Rating: 150 Amperes 208 Volts 3 Phase 4 Wires
3. Bus Bar Dimensions: Phase - _____; Neutral - _____.
   (Current density shall be based on 1000 A/sq. inch for copper bus and 750 A/sq. inch for aluminum bus. The minimum required current density shall apply to the main bus upstream of the meter(s) including up to the first disconnect after each meter).
4. Main Disconnect: [X] Circuit Breaker [ ] Fused Switch
5. Interrupting or Short Circuit Rating: 25,000 Amperes, RMS Sym.
6. CT Compartment (per EUSERC #320 or #322, whichever is applicable)
7. Meter Plate (per EUSERC #332)
8. Pull Section (per EUSERC #345)
9. Line Termination (per EUSERC #347)
10. Copper Ground Bus
11. Factory-installed bolt-type test by-pass/disconnect block (for self contained meters only)
12. Meter Socket with 7 Jaws
13. Remote Metering Required: [ ] Yes; [X] No

NOTE: Please contact the Electrical Equipment Supervisor, at (510) 814-5692 as soon as the equipment arrives at the job site to schedule the installation of AMP-furnished instrument transformers and other metering devices.

The service equipment will also have to be inspected and approved by the City of Alameda's Electrical Inspector, (510) 747-6830, before it can be energized. **For projects under Federal, State, or County inspection jurisdiction, a City inspection of service equipment up to and including the main disconnect, at a minimum, is required before the service can be energized.**

#16 PARK OTIS PUMP STATION

ALAMEDA MUNICIPAL POWER
A Department of the City of Alameda

Project Requirements Checklist
Service Equipment Requirements

Questions? Contact the AMP Engineering Department at 510-748-3996, FAX: 510-748-3993

SUMMARY OF SERVICE EQUIPMENT REQUIREMENTS

Customer/Contractor is responsible for ensuring that final installations meet all City of Alameda and Alameda Municipal Power (AMP) requirements.

AMP will furnish and install the necessary metering CT's, PT's, and test switch. For service equipment approval, contractor/vendor must comply with all AMP and City of Alameda requirements, including those summarized below. All Service Equipment will have provisions for sealing the Meter per EUSERC requirements.

Customer/Contractor should provide Service Equipment shop drawings to AMP for review, prior to manufacture, to avoid delays due to field modifications. Final Service Equipment Submittals must be provided to, and approved by, the City of Alameda Permit Center and AMP prior to installation and connection to AMP's electrical system.

1. Service Equipment: [ ] Indoor (NEMA 1 or better) [X] Outdoor (NEMA 3R or better)
2. Service Rating: 200 Amperes 208 Volts 3 Phase 4 Wires
3. Bus Bar Dimensions: Phase - _____; Neutral - _____.
   (Current density shall be based on 1000 A/sq. inch for copper bus and 750 A/sq. inch for aluminum bus. The minimum required current density shall apply to the main bus upstream of the meter(s) including up to the first disconnect after each meter).
4. Main Disconnect: [X] Circuit Breaker [ ] Fused Switch
5. Interrupting or Short Circuit Rating: 25,000 Amperes, RMS Sym.
6. CT Compartment (per EUSERC #320 or #322, whichever is applicable)
7. Meter Plate (per EUSERC #332)
8. Pull Section (per EUSERC #345)
9. Line Termination (per EUSERC #347)
10. Copper Ground Bus
11. Factory-installed bolt-type test by-pass/disconnect block (for self contained meters only)
12. Meter Socket with 7 Jaws
13. Remote Metering Required: [ ] Yes; [X] No

NOTE: Please contact the Electrical Equipment Supervisor, at (510) 814-5692 as soon as the equipment arrives at the job site to schedule the installation of AMP-furnished instrument transformers and other metering devices.

The service equipment will also have to be inspected and approved by the City of Alameda's Electrical Inspector, (510) 747-6830, before it can be energized. **For projects under Federal, State, or County inspection jurisdiction, a City inspection of service equipment up to and including the main disconnect, at a minimum, is required before the service can be energized.**

#28 COLA BALLENA PUMP STATION

ALAMEDA MUNICIPAL POWER
A Department of the City of Alameda

Project Requirements Checklist
Service Equipment Requirements

Questions? Contact the AMP Engineering Department at 510-748-3996, FAX: 510-748-3993

SUMMARY OF SERVICE EQUIPMENT REQUIREMENTS

Customer/Contractor is responsible for ensuring that final installations meet all City of Alameda and Alameda Municipal Power (AMP) requirements.

AMP will furnish and install the necessary metering CT's, PT's, and test switch. For service equipment approval, contractor/vendor must comply with all AMP and City of Alameda requirements, including those summarized below. All Service Equipment will have provisions for sealing the Meter per EUSERC requirements.

Customer/Contractor should provide Service Equipment shop drawings to AMP for review, prior to manufacture, to avoid delays due to field modifications. Final Service Equipment Submittals must be provided to, and approved by, the City of Alameda Permit Center and AMP prior to installation and connection to AMP's electrical system.

1. Service Equipment: [ ] Indoor (NEMA 1 or better) [X] Outdoor (NEMA 3R or better)
2. Service Rating: 150 Amperes 240 Volts 3 Phase 4 Wires
3. Bus Bar Dimensions: Phase - _____; Neutral - _____.
   (Current density shall be based on 1000 A/sq. inch for copper bus and 750 A/sq. inch for aluminum bus. The minimum required current density shall apply to the main bus upstream of the meter(s) including up to the first disconnect after each meter).
4. Main Disconnect: [X] Circuit Breaker [ ] Fused Switch
5. Interrupting or Short Circuit Rating: 25,000 Amperes, RMS Sym.
6. CT Compartment (per EUSERC #320 or #322, whichever is applicable)
7. Meter Plate (per EUSERC #332)
8. Pull Section (per EUSERC #345)
9. Line Termination (per EUSERC #347)
10. Copper Ground Bus
11. Factory-installed bolt-type test by-pass/disconnect block (for self contained meters only)
12. Meter Socket with 7 Jaws
13. Remote Metering Required: [ ] Yes; [X] No

NOTE: Please contact the Electrical Equipment Supervisor, at (510) 814-5692 as soon as the equipment arrives at the job site to schedule the installation of AMP-furnished instrument transformers and other metering devices.

The service equipment will also have to be inspected and approved by the City of Alameda's Electrical Inspector, (510) 747-6830, before it can be energized. **For projects under Federal, State, or County inspection jurisdiction, a City inspection of service equipment up to and including the main disconnect, at a minimum, is required before the service can be energized.**

#31 MARINA VILLAGE PUMP STATION

ALAMEDA MUNICIPAL POWER
A Department of the City of Alameda

Project Requirements Checklist
Service Equipment Requirements

Questions? Contact the AMP Engineering Department at 510-748-3996, FAX: 510-748-3993

SUMMARY OF SERVICE EQUIPMENT REQUIREMENTS

Customer/Contractor is responsible for ensuring that final installations meet all City of Alameda and Alameda Municipal Power (AMP) requirements.

AMP will furnish and install the necessary metering CT's, PT's, and test switch. For service equipment approval, contractor/vendor must comply with all AMP and City of Alameda requirements, including those summarized below. All Service Equipment will have provisions for sealing the Meter per EUSERC requirements.

Customer/Contractor should provide Service Equipment shop drawings to AMP for review, prior to manufacture, to avoid delays due to field modifications. Final Service Equipment Submittals must be provided to, and approved by, the City of Alameda Permit Center and AMP prior to installation and connection to AMP's electrical system.

1. Service Equipment: [ ] Indoor (NEMA 1 or better) [X] Outdoor (NEMA 3R or better)
2. Service Rating: 100 Amperes 480 Volts 3 Phase 4 Wires
3. Bus Bar Dimensions: Phase - _____; Neutral - _____.
   (Current density shall be based on 1000 A/sq. inch for copper bus and 750 A/sq. inch for aluminum bus. The minimum required current density shall apply to the main bus upstream of the meter(s) including up to the first disconnect after each meter).
4. Main Disconnect: [X] Circuit Breaker [ ] Fused Switch
5. Interrupting or Short Circuit Rating: 35,000 Amperes, RMS Sym.
6. CT Compartment (per EUSERC #320 or #322, whichever is applicable)
7. Meter Plate (per EUSERC #332)
8. Pull Section (per EUSERC #345)
9. Line Termination (per EUSERC #347)
10. Copper Ground Bus
11. Factory-installed bolt-type test by-pass/disconnect block (for self contained meters only)
12. Meter Socket with 7 Jaws
13. Remote Metering Required: [ ] Yes; [X] No

NOTE: Please contact the Electrical Equipment Supervisor, at (510) 814-5692 as soon as the equipment arrives at the job site to schedule the installation of AMP-furnished instrument transformers and other metering devices.

The service equipment will also have to be inspected and approved by the City of Alameda's Electrical Inspector, (510) 747-6830, before it can be energized. **For projects under Federal, State, or County inspection jurisdiction, a City inspection of service equipment up to and including the main disconnect, at a minimum, is required before the service can be energized.**

NO	REVISIONS	DATE	APPR
A			
A			
A			
A			
A			
A			

PROFESSIONAL ENGINEER · ELECTRICAL · CIVIL · STATE OF CALIFORNIA

Schaaf & Wheeler
CONSULTING CIVIL ENGINEERS
1171 HOMESTEAD RD. STE. 255
SANTA CLARA, CA 95050
(408) 246-4848

CITY OF ALAMEDA
GROUP 4 - SEWERAGE PUMP STATION RENOVATIONS FOR RELIABILITY AND SAFETY IMPROVEMENTS
ALAMEDA MUNICIPAL POWER SERVICE REQUIREMENTS

DATE:	11/27/19
SCALE:	AS SHOWN
DESIGN:	CLP
DRAWN:	CLP
CHECKED:	BLS

DWG 9425 CASE 35

P1

70 OF 70