CITY OF ALAMEDA
SEWER PUMP STATION BACKUP
GENERATOR INSTALLATION, PHASE 1
ALAMEDA, CALIFORNIA
PROJECT NO. PW 04-10-10

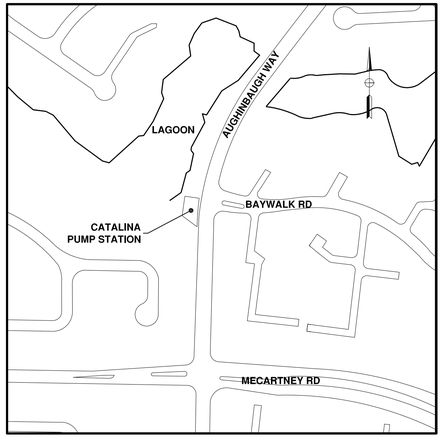

CATALINA SITE MAP
NO SCALE

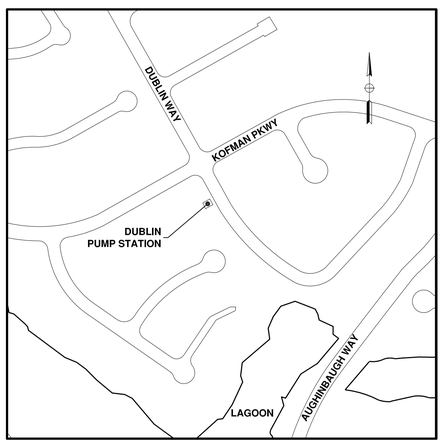

DUBLIN SITE MAP
NO SCALE

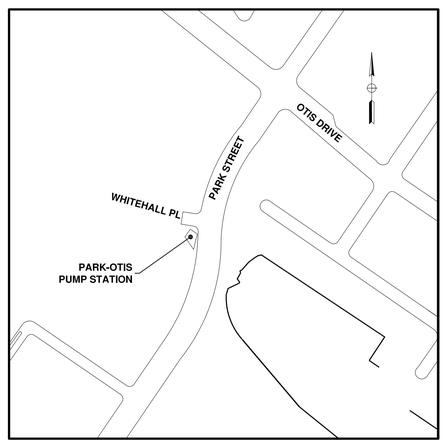

PARK-OTIS SITE MAP
NO SCALE

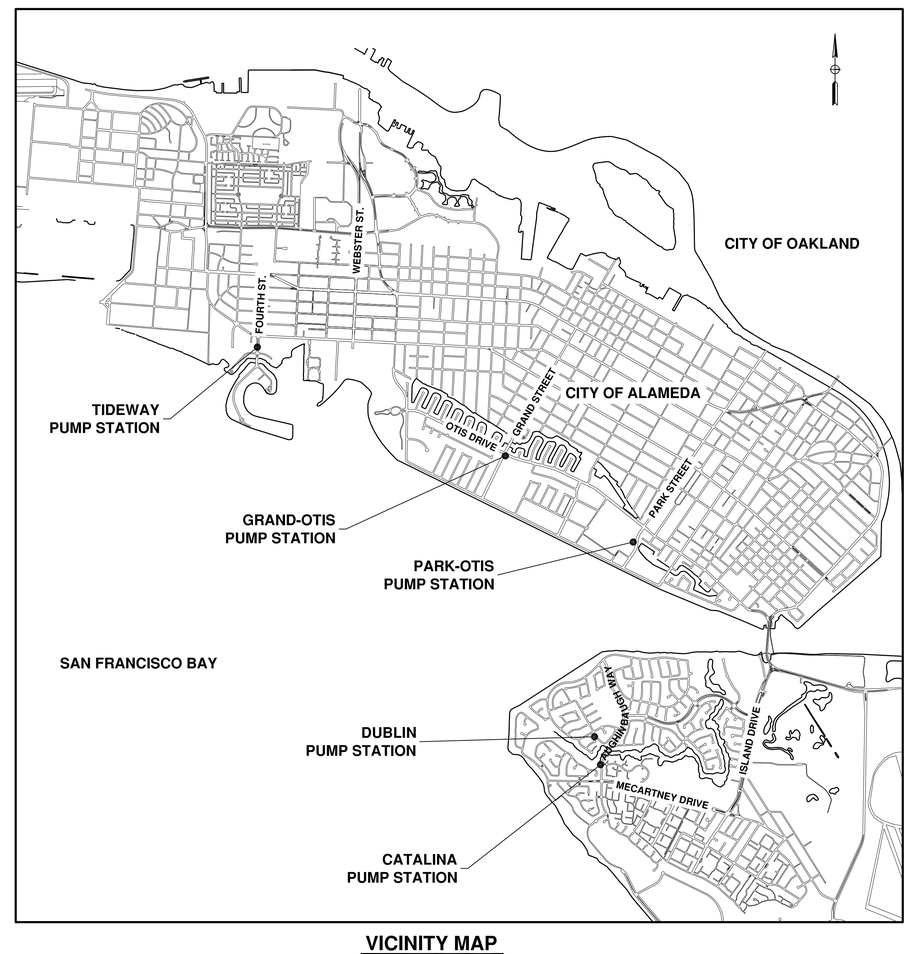

VICINITY MAP
SCALE: 1" = 2,000'

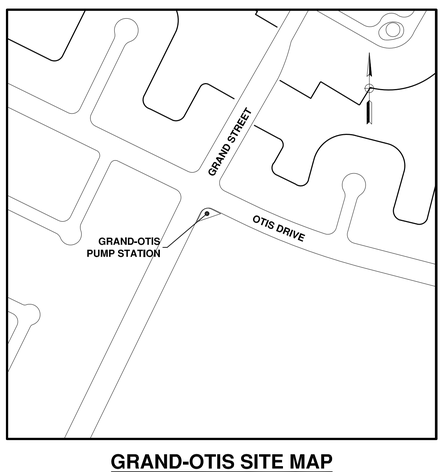

GRAND-OTIS SITE MAP
NO SCALE

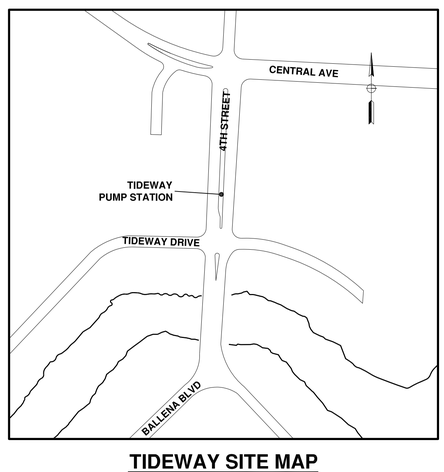

TIDEWAY SITE MAP
NO SCALE

SHEET INDEX

1	TITLE SHEET
2	NOTES, ABBREVIATIONS & LEGEND
3-4	CATALINA IMPROVEMENT PLAN
5-6	DUBLIN IMPROVEMENT PLANS
7-8	GRAND-OTIS IMPROVEMENT PLANS
9-10	PARK-OTIS IMPROVEMENT PLANS
11-12	TIDEWAY IMPROVEMENT PLANS
13	CIVIL DETAILS
14	STRUCTURAL DETAILS
15	E1.0 - ELECTRICAL SYMBOLS AND ABBREVIATIONS
16	E1.1 - ELECTRICAL DEMOLITION NOTES
17-21	E2.0-E2.4 - PUMP STATION ELECTRICAL IMPROVEMENTS
22-23	E3.0-E3.1 - SINGLE LINE DIAGRAMS
24	E3.2 - FEEDER SCHEDULE
25-27	E4.0-E5.0 - ELECTRICAL DETAILS

SUBMITTED

SCHAAF & WHEELER
BENJAMIN L. SHICK, RCE 68813
EXP. 9/30/2013

APPROVED

BARBARA HAWKINS, PE
CITY ENGINEER

NO	REVISIONS	DATE	APPR
1			
2			
3			
4			
5			
6			

REGISTERED PROFESSIONAL ENGINEER
BENJAMIN L. SHICK
No. 68813
Exp. 9-30-13
CIVIL
STATE OF CALIFORNIA

Schaaf & Wheeler
CONSULTING CIVIL ENGINEERS
100 N. WINCHESTER BLVD., STE. 200
SANTA CLARA, CA 95050
(408) 246-4848

CITY OF ALAMEDA
SEWER PUMP STATION BACKUP
GENERATOR INSTALLATION, PHASE 1
TITLE SHEET

DATE: 09/28/11
SCALE: AS SHOWN
DESIGN: GMA
DRAWN: GMA
CHECKED: BLS

DWG 9348 CASE 95

GENERAL NOTES

1. ALL MATERIALS AND WORKMANSHIP SHALL CONFORM TO THE GENERAL AND SPECIFIC PROVISIONS, STANDARD DRAWINGS, AND REQUIREMENTS OF THE CITY OF ALAMEDA.
2. NO CHANGE TO THE PROJECT IMPROVEMENT PLANS SHALL BE PERMITTED WITHOUT PRIOR APPROVAL BY THE DIRECTOR OF PUBLIC WORKS/CITY ENGINEER.
3. CONTRACTOR AGREES TO ASSUME SOLE AND COMPLETE RESPONSIBILITY FOR JOB SITE CONDITIONS DURING THE CONSTRUCTION OF THIS PROJECT, INCLUDING SAFETY OF ALL PERSONS AND PROPERTY; THAT THIS REQUIREMENT SHALL APPLY CONTINUOUSLY AND NOT BE LIMITED TO NORMAL WORKING HOURS; AND THAT THE CONTRACTOR SHALL DEFEND, INDEMNIFY AND HOLD THE CITY AND ENGINEER HARMLESS FROM ANY AND ALL LIABILITY, REAL OR ALLEGED, IN CONNECTION WITH THE PERFORMANCE OF WORK ON THIS PROJECT, EXCEPT TO THE EXTENT ARISING FROM THE SOLE NEGLIGENCE OF THE CITY OR ENGINEER.
4. CONTRACTOR SHALL CONFORM TO THE RULES AND REGULATIONS OF THE STATE CONSTRUCTION SAFETY ORDERS.
5. INFORMATION CONCERNING EXISTING UTILITIES IS NOT GUARANTEED; LOCATIONS SHOWN ON THE PLANS ARE APPROXIMATE ONLY. CONTRACTOR SHALL REQUEST THAT UNDERGROUND FACILITIES BE LOCATED AND MARKED IN THE FIELD A MINIMUM OF 48 HOURS PRIOR TO THE START OF CONSTRUCTION BY CALLING UNDERGROUND SERVICE ALERT (U.S.A.) AT 800-227-2600. CONTRACTOR SHALL NOTIFY THE ENGINEER OF ANY POTENTIAL CONFLICT WITH EXISTING UTILITIES PRIOR TO CONSTRUCTION.
6. CONTRACTOR SHALL NOTIFY THE CITY OF ALAMEDA DEPARTMENT OF PUBLIC WORKS (PHILIP LEE 510-747-7942) AT LEAST 48 HOURS IN ADVANCE OF THE START OF ANY CONSTRUCTION ACTIVITY. ALL UTILITY SHUTDOWNS ARE TO BE COORDINATED THROUGH THE CITY. ANY TEMPORARY SUSPENSION OF THE WORK OR SUBSEQUENT RESUMPTION OF WORK REQUIRES THE NOTIFICATION OF THE CITY AND THE ENGINEER.
7. ALL EXISTING UTILITIES SHALL BE ADEQUATELY SUPPORTED AND PROTECTED TO THE SATISFACTION OF THE CITY. IN THE EVENT OF DAMAGE TO ANY UTILITY OCCASIONED BY THE CONTRACTOR OPERATIONS, THE CONTRACTOR, AT HIS SOLE COST AND EXPENSE, WILL IMMEDIATELY CAUSE REPAIRS TO BE MADE TO THE SATISFACTION OF THE AFFECTED UTILITY. NOTIFY THE ENGINEER OF ANY ADJUSTMENTS NECESSITATED BY WAY OF CONFLICT WITH EXISTING UTILITIES.
8. CONTRACTOR SHALL PROVIDE ALL LIGHTS, SIGNS, BARRICADES, FLAG MEN, CONES OR OTHER DEVICES NECESSARY TO PROVIDE FOR PUBLIC SAFETY IN ACCORDANCE WITH THE SPECIFICATIONS. CONTRACTOR SHALL PROVIDE A TRAFFIC CONTROL PLAN IN CONFORMANCE WITH THE SPECIFICATIONS.
9. CONTRACTOR SHALL REPLACE, AT HIS EXPENSE, ALL TREES, SHRUBS, LAWNS, FENCES AND IMPROVEMENTS WHICH ARE TO REMAIN INTACT BUT HAVE BEEN REMOVED OR DAMAGED DURING CONSTRUCTION. CONTRACTOR SHALL NOT REMOVE OR DAMAGE IMPROVEMENTS LOCATED WITHIN CITY PROPERTY WITHOUT WRITTEN PERMISSION FROM THE CITY.
10. WRITTEN PERMISSION FROM APPROPRIATE PROPERTY OWNERS MUST BE OBTAINED PRIOR TO REMOVING ANY EXISTING FENCES, SHEDS, OR OTHER PROPERTY OUTSIDE OF THE PUBLIC RIGHT-OF-WAY OR CITY PROPERTY.
11. ALL PERMANENT IMPROVEMENTS REMOVED OR DAMAGED BY THE CONTRACTOR SHALL BE RESTORED TO THEIR ORIGINAL LOCATION AND CONDITION BY THE CONTRACTOR USING NEW MATERIALS AS DIRECTED BY THE ENGINEER.
12. CONTRACTOR TO PROVIDE TEMPORARY FENCING AND GATES WHENEVER AND WHEREVER EXISTING FENCING OR GATES ARE REMOVED FOR CONSTRUCTION PURPOSES.
13. CONTRACTOR TO MAINTAIN A MEANS OF ACCESS TO PROPERTIES, DRIVEWAYS, AND DWELLINGS AT ALL TIMES AS DETERMINED BY THE ENGINEER.
14. THE CONTRACTOR SHALL NOTIFY, BY CIRCULAR, AS DIRECTED BY THE ENGINEER, ALL BUSINESS ESTABLISHMENTS AND RESIDENCES AFFECTED BY THE WORK, AT LEAST 48 HOURS PRIOR TO START OF CONSTRUCTION. CIRCULAR SHALL BE SUBJECT TO APPROVAL BY THE DIRECTOR OF PUBLIC WORKS/CITY ENGINEER.
15. ALL SURPLUS AND UNSUITABLE MATERIAL SHALL BE REMOVED FROM THE SITE AND PUBLIC RIGHT-OF-WAY.
16. CONTRACTOR SHALL PERFORM HIS CONSTRUCTION AND OPERATION IN A MANNER WHICH WILL NOT ALLOW HARMFUL POLLUTANTS TO ENTER THE STORM DRAIN SYSTEM OR OAKLAND ESTUARY. THE CONTRACTOR SHALL PRESENT HIS PROPOSED POLLUTION PREVENTION BMP'S AT THE PRE-CONSTRUCTION MEETING FOR DISCUSSION AND APPROVAL.
17. THE CONTRACTOR SHALL NEITHER WASTE NOR DEPOSIT ANY HAZARDOUS MATERIALS WITHIN THE AREAS OF THIS PROJECT, INCLUDING BUT NOT LIMITED TO GASOLINE OR DIESEL FUELS, MOTOR OILS OR TRANSMISSION FLUIDS, ANTIFREEZE, HYDRAULIC FLUIDS, LUBRICANTS, STARTING FLUIDS AND FILTERS, AND/OR CONTAINERS FOR THESE PRODUCTS. HAZARDOUS MATERIAL SPILLS THAT OCCUR AS A RESULT OF EITHER EQUIPMENT FAILURES OR VANDALISM, INCLUDING ALL ADJACENT CONTAMINATED SOILS, SHALL BE REMOVED AND TRANSPORTED TO AN ENVIRONMENTALLY APPROVED DISPOSAL SITE. ALL REMOVAL, TRANSPORTATION AND DISPOSAL COSTS SHALL BE THE RESPONSIBILITY OF THE CONTRACTOR OR HIS SUBCONTRACTORS.
18. OVERNIGHT PARKING OF CONSTRUCTION EQUIPMENT IN THE STREET RIGHT-OF-WAY OR ADJACENT PARKING LOT SHALL NOT BE PERMITTED, EXCEPT AT LOCATION(S) APPROVED BY THE CITY.
19. WHENEVER PUMP STATIONS ARE REMOVED FROM SERVICE, CONTRACTOR SHALL PROVIDE BYPASS PUMPING, HAVING FIRM CAPACITIES AS DEFINED FOR EACH PUMP STATION. FIRM CAPACITY IS DEFINED AS THE TOTAL PUMPING CAPACITY WITH THE LARGEST PUMP OUT OF SERVICE.
20. STREET ADDRESS SIGN SHALL BE POSTED AT EACH PUMP STATION, LOCATION OF SIGN IS SHOWN ON THE SITE PLANS. SIGN SHALL BE ¼" THICK ALUMINUM WITH 1-INCH RADIUS CORNERS. SIGN SHALL BE COVERED WITH GREEN ENGINEER-GRADE REFLECTIVE SHEETING AND SHALL HAVE WHITE HORIZONTAL LETTERING. LETTERING SHALL BE 4 INCHES IN HEIGHT AND STENCILS SHALL HAVE ¾" THICK STROKE. PENETRATIONS THROUGH NEW PANELS SHALL MEET THE REQUIREMENTS WITHIN THE ASSOCIATED SPECIFICATIONS
21. FIRE EXTINGUISHERS (2A-10B:C TYPE) SHALL BE PLACED AT EACH SITE IN THE LOCATION SHOWN ON THE SITE PLANS. EXTINGUISHERS SHALL BE PLACED WITHIN APPROPRIATELY SIZED, WEATHER PROOF, "CHIEF FIRE EXTINGUISHER CABINET", OR APPROVED EQUAL. CABINETS SHALL BE PERMANENTLY SECURED TO FENCE POSTS OR ELECTRICAL CABINET WITH STAINLESS STEEL HARDWARE AS SHOWN ON THE PLANS. A 3-FOOT MINIMUM CLEARANCE IN FRONT OF ALL ELECTRICAL PANELS AND GENERATORS DOORS.

IRRIGATION NOTES

1. ALL DISTURBED IRRIGATION SHALL BE REPLACED IN KIND.
2. ALL IRRIGATION HEADS SURROUNDING THE PROPOSED IMPROVEMENTS SHALL BE REPLACED OR ADJUSTED SO THAT SPRAY IS LIMITED TO THE LANDSCAPED AREAS AND DOES NOT HIT THE PROPOSED IMPROVEMENTS.
3. IRRIGATION HEADS SHALL BE ADJUSTED OR ADDED TO PROVIDE SPRAY COVERAGE TO PROPOSED LANDSCAPING. ADDITIONAL HAND WATERING REQUIREMENTS ARE DEFINED IN SPECIFICATION SECTION 02950.
4. EXISTING IRRIGATION IRRIGATION EQUIPMENT (PIPES, HEADS, CONDUIT, WIRES, ETC.) LOCATED UNDER PROPOSED IMPROVEMENTS SHALL BE RE-ROUTED AROUND CONCRETE PADS. A ONE FOOT MINIMUM CLEARANCE SHALL BE PROVIDED FROM IMPROVEMENTS (CONCRETE PADS, FENCES, ETC.) TO IRRIGATION EQUIPMENT.
5. NEW IRRIGATION HEADS MAY BE REQUIRED TO PROVIDE COVERAGE FOR IRRIGATION HEADS REMOVED FOR IMPROVEMENTS.

ABBREVIATIONS

AB	AGGREGATE BASE	INV	INVERT
AC	ASPHALTIC CONCRETE	KW	KILOWATT
ATS	AUTOMATIC TRANSFER SWITCH	LF	LINEAL FEET
BFP	BACK FLOW PREVENTER	MAX	MAXIMUM
BM	BENCH MARK	MIN	MINIMUM
C.	CONDUIT	MCC	MOTOR CONTROL CENTER
CL	CENTERLINE	MJ	MECHANICAL JOINT
CLR	CLEAR	(N)	NEW
C.O.	CONDUCTOR	NTS	NOT TO SCALE
CONC	CONCRETE	PE	PLAIN END
DEG	DEGREE	POC	POINT OF CONNECTION
DIA	DIAMETER	PUE	PUBLIC UTILITY EASEMENT
DW	DRIVEWAY	PVC	POLY VINYL CHLORIDE
EA	EACH	RCP	REINFORCED CONCRETE PIPE
ELEC	ELECTRICAL	REQD	REQUIRED
ELECT	ELECTRICAL	SCH	SCHEDULE
EL	ELEVATION	SPECS	SPECIFICATIONS
EG	ENGINE-GENERATOR	SS	STAINLESS STEEL, SANITARY SEWER
EQ	EQUAL	STA	STATION
(E)	EXISTING	SD	STORM DRAIN
FDR	FEEDER	TC	TOP OF CURB
FL	FLANGE	TSB	TRAFFIC SIGNAL BOX
FG	FINISH GRADE	TW	TOP OF WALL
FRP	FIBERGLASS REINFORCED PLASTIC	TYP	TYPICAL
GALV	GALVANIZED	UG	UNDERGROUND
GND	GROUND	UON	UNLESS OTHERWISE NOTED
HV	HIGH VOLTAGE	W/	WITH
HP	HORSEPOWER	WM	WATER METER
ID	INSIDE DIAMETER	WV	WATER VALVE
		XFMR	TRANSFORMER

LEGEND

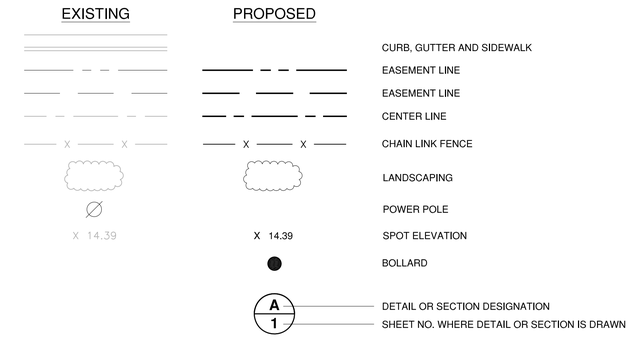

TREE PROTECTION NOTES

1. THE CONTRACTOR SHALL BE SENSITIVE TO THE REQUESTS OF THE LOCAL RESIDENTS AND EXERCISE ADDED CARE WHEN WORKING AROUND THE TREES THAT MAY CONFLICT WITH THE WORK IN THIS AREA.
2. PROTECTION - TREES TO BE PROTECTED ARE SHOWN ON THE PLANS; HOWEVER, ADDITIONAL TREES MAY NEED TO BE PROTECTED. ALL TREES THAT COULD BE DAMAGED FROM EQUIPMENT REQUIRE PROTECTION FROM PHYSICAL INJURY. TREE TRUNKS ARE TO BE WRAPPED WITH ORANGE PLASTIC CONSTRUCTION FENCING FROM THE BASE UP TO THE FIRST BRANCH. THE PLASTIC FENCING MUST BE WRAPPED TO A MINIMUM THICKNESS OF 2 INCHES TO PROTECT FROM POSSIBLE INJURY. ADDITIONAL PROTECTION FROM LARGER EQUIPMENT SHALL BE PROVIDED BY STRAPPING 2X4 BOARDS OVER THE ORANGE FENCING ON THE SIDE OF THE TREE WHERE THERE IS A POTENTIAL FOR INJURY. WHEN TRENCHING AND LIME SOIL STABILIZATION IS UNDERTAKEN, THE SIZE OF THE EQUIPMENT MAY REQUIRE THAT UPPER SCAFFOLD STEMS ARE ALSO WRAPPED AND PROTECTED.
3. WORK AROUND TREES - MECHANICAL BUCKET USE IS NOT ALLOWED WITHIN FIVE FEET OF THE BASE OF ALL TREES. IT IS ACCEPTABLE TO USE A JACKHAMMER TO BREAK CEMENT IMMEDIATELY ADJACENT TO THE TREE. IT IS ALSO ACCEPTABLE TO CONDUCT SAW CUTTING OF CEMENT AND ASPHALT INSIDE OF THE FIVE FOOT NO EQUIPMENT ZONE. TRENCHING CAN BE UNDERTAKEN INSIDE OF THE FIVE FOOT AREA AFTER ALL ROOT TREATMENT PROCEDURES HAVE BEEN COMPLETED. WHERE IN THE PUBLIC RIGHT-OF -WAY, TREE ROOTS CONFLICT WITH THE GRADE FOR THE PLACEMENT OR REPLACEMENT OF CONCRETE WORK, THE CONTRACTOR SHALL INFORM THE CITY MAINTENANCE DIVISION IMMEDIATELY. WHEN DIRECTED BY THE CITY MAINTENANCE DIVISION, THE CONTRACTOR SHALL PERFORM THE NECESSARY ROOT REMOVAL AND TRIMMING TO A MINIMUM DEPTH OF TEN INCHES (10") BELOW THE PROPOSED CONCRETE, TO PREPARE THE SITE FOR THE CONCRETE WORK. ALL CUT ROOTS SHALL BE PROPERLY PAINTED WITH AN APPROVED ROOT SEALING COMPOUND. AFTER ROOTS ARE PRUNED, EXPOSED ROOT ENDS SHALL BE COVERED WITH A MINIMUM OF TWO LAYERS OF BURLAP. BURLAP SHALL BE MAINTAINED IN A MOIST CONDITION UNTIL BACKFILLED.
4. METHOD OF EXCAVATION AROUND ROOTS - THE USE OF AIR SPADING IS THE ONLY ACCEPTABLE METHOD FOR EXCAVATING THE SOIL WITHIN FIVE FEET OF THE BASE OF TREES:
   A. PRIOR TO ANY LATERAL EXTENSION EXCAVATION, THE AREA MUST BE REVIEWED BY THE ENGINEER OR HIS REPRESENTATIVE, AND IF REQUIRED, THE CITY ARBORIST SHALL SUPERVISE THE EXCAVATION AND ANY ROOT CUTTING OR SHAVING WHERE TREE CONFLICTS EXIST.
   B. AIR SPADE - ALSO CALLED AN AIR KNIFE, THIS TOOL USES HIGH PRESSURE AIR TO REMOVE SOIL FROM AROUND TREE ROOTS WITH MINIMAL DAMAGE TO ROOTS. SOIL MUST BE MOISTENED PRIOR AND THE AREA MUST BE SURROUNDED WITH A PLYWOOD (OR ANOTHER COMPARABLE MATERIAL) BARRIER THAT WILL PREVENT THE DEBRIS FROM BEING BLOWN ABOUT.
5. MULCH SHALL BE APPLIED TO DISTURBED SOIL WITHIN THE DRIPLINE OF TREES. MULCH SHALL CONSIST OF GOOD QUALITY COMPOST AND WOOD CHIPS.

NO	REVISIONS	DATE	APPR
1			
2			
3			
4			
5			
6			
7			

REGISTERED PROFESSIONAL ENGINEER BENJAMIN L. SHICK No. 68813 Exp. 9-30-13 CIVIL STATE OF CALIFORNIA

Schaaf & Wheeler
CONSULTING CIVIL ENGINEERS
100 N. WINCHESTER BLVD., STE. 200
SANTA CLARA, CA 95050
(408) 246-4848

CITY OF ALAMEDA
SEWER PUMP STATIONS BACKUP
GENERATOR INSTALLATION, PHASE 1
NOTES, LEGEND & ABBREVIATIONS

DATE: 09/28/11
SCALE: AS SHOWN
DESIGN: GMA
DRAWN: GMA
CHECKED: BLS

DWG 9348 CASE 95

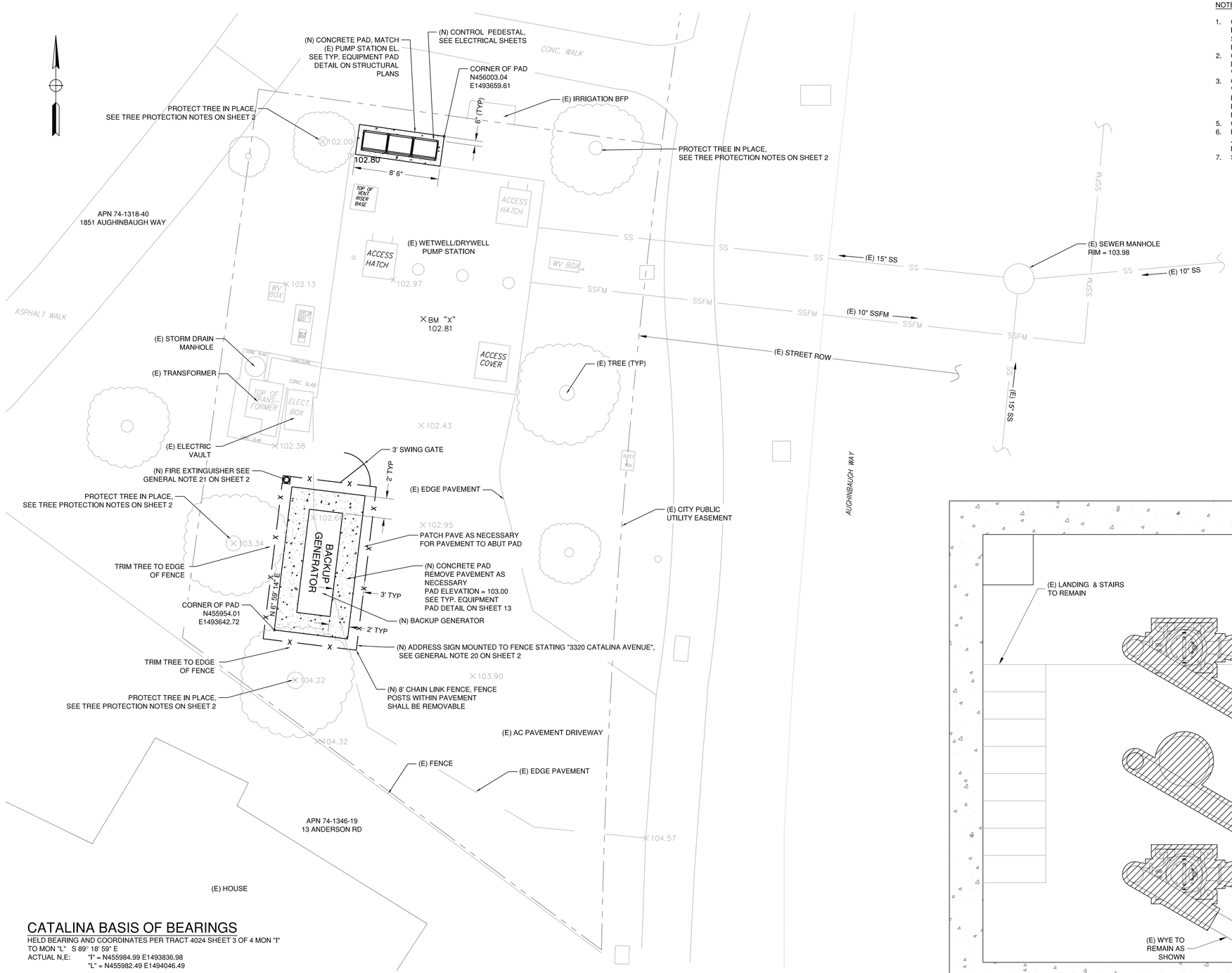

CATALINA BASIS OF BEARINGS

HELD BEARING AND COORDINATES PER TRACT 4024 SHEET 3 OF 4 MON "I" TO MON "L" S 89° 18' 59" E
ACTUAL N,E: "I" = N455984.99 E1493836.98
"L" = N455982.49 E1494046.49

CATALINA BENCHMARKS

HELD SSMH 9811056 RIM AS SHOWN ON SYSTEM MAP ELEV. = 104.78

LOCAL BM SET ON EXISTING WETWELL/DRYWELL, SHOWN ON PLAN

CATALINA SITE PLAN

SCALE: 1" = 5'

NOTES:

1. CONTRACTOR TO REMOVE ALL ELECTRICAL EQUIPMENT FROM DRYWELL INCLUDING, BUT NOT LIMITED TO, ELECTRICAL PANELS, CONDUITS, LIGHTS, AND SWITCHES. FOR DETAILED ELECTRICAL DEMOLITION REQUIREMENTS, REFER TO ELECTRICAL SHEETS.
2. CONTRACTOR SHALL REMOVE ALL VENTILATION EQUIPMENT INCLUDING FANS, DUCTING AND RELATED CONDUIT, ETC. WHERE DUCTING PENETRATES THE DRY WELL CEILING, CONTRACTOR SHALL TRIM DUCTING FLUSH AT THE CEILING.
3. CONTRACTOR SHALL PROVIDE CONTINUOUS PUMPING CAPACITY FROM THE TIME WHEN THE EXISTING STATION IS TAKEN OFFLINE UNTIL THE IMPROVEMENTS HAVE BEEN ACCEPTED BY THE CITY. AT THIS LOCATION, IT IS ACCEPTABLE TO USE EXISTING PUMPS TO MAINTAIN EXISTING SEWER CAPACITY PROVIDED THAT POWER AND CONTROLS ARE CONTINUOUSLY SUPPLIED.
5. CONTRACTOR SHALL PROVIDE A MINIMUM FIRM STATION CAPACITY OF 550 GPM.
6. FORCE MAIN DISCHARGES TO A MANHOLE AT THE INTERSECTION OF AUGHINBAUGH WAY AND KOFMAN PKWY APPROXIMATELY 1,100 FEET TO THE NORTH EAST OF THE PUMP STATION.
7. SEE ELECTRICAL SHEETS FOR ADDITIONAL PUMP STATION IMPROVEMENTS.

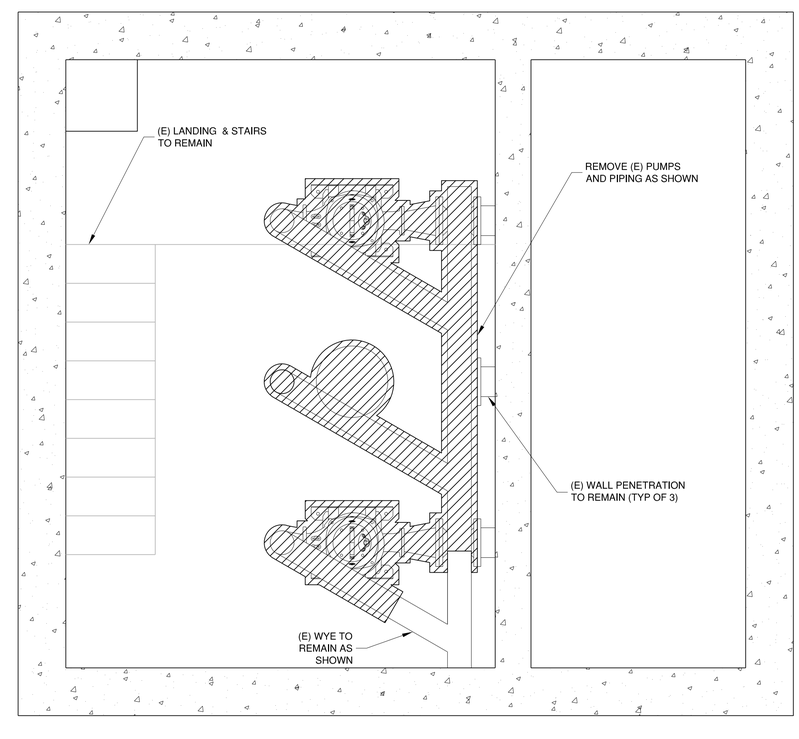

PUMP DEMOLITION PLAN

SCALE:1/2" = 1'

NO	REVISIONS	DATE	APPR
1			
2			
3			
4			
5			
6			
7			

REGISTERED PROFESSIONAL ENGINEER BENJAMIN L. SHICK No. 68813 Exp. 9-30-13 CIVIL STATE OF CALIFORNIA

Schaaf & Wheeler
CONSULTING CIVIL ENGINEERS
100 N. WINCHESTER BLVD., STE. 200
SANTA CLARA, CA 95050
(408) 246-4848

CITY OF ALAMEDA
SEWER PUMP STATIONS BACKUP GENERATOR INSTALLATION, PHASE 1
CATALINA SITE PLAN

DATE: 09/28/11
SCALE: AS SHOWN
DESIGN: GMA
DRAWN: GMA
CHECKED: BLS

DWG 9348 CASE 95

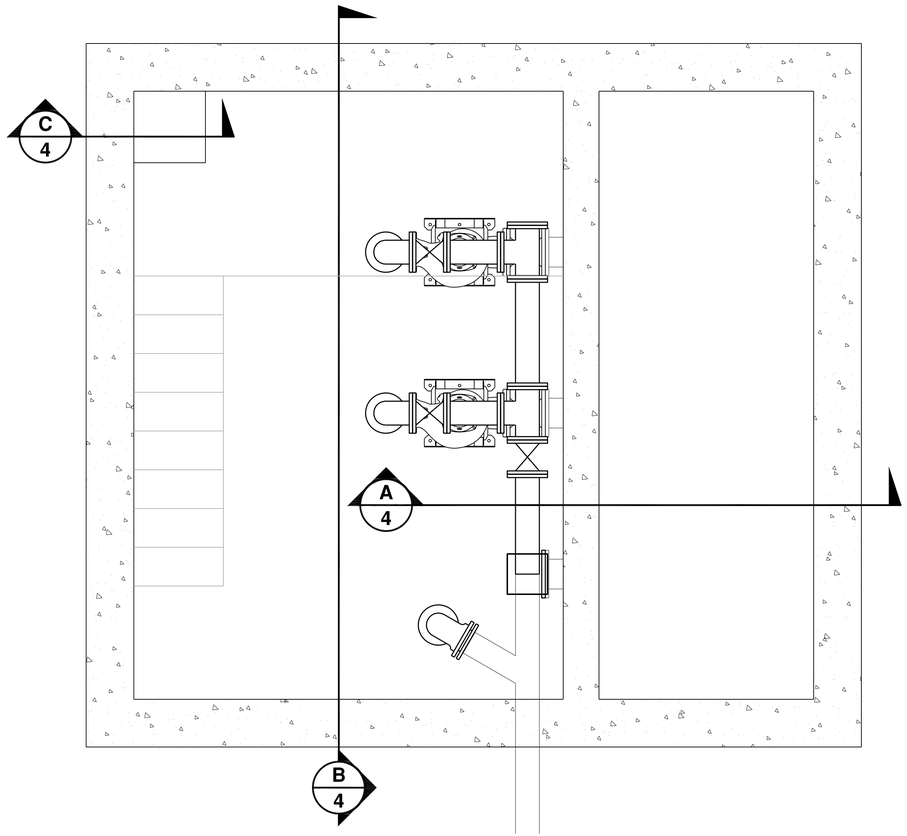

PUMP IMPROVEMENT PLAN
SCALE:1/2" = 1'

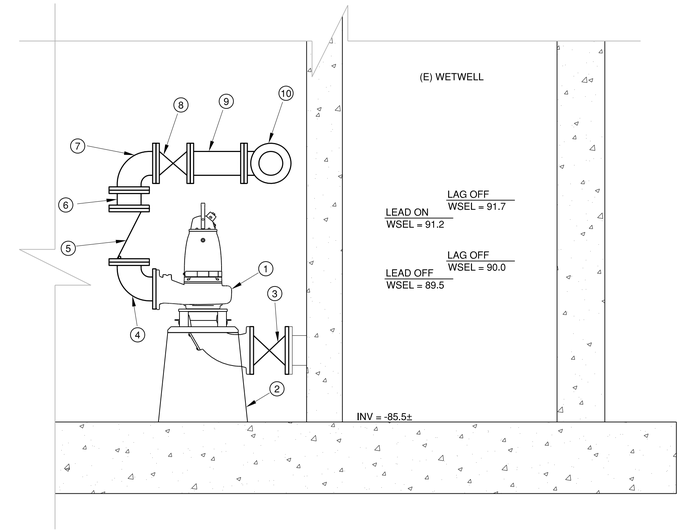

SECTION A/4
SCALE:1/2" = 1'

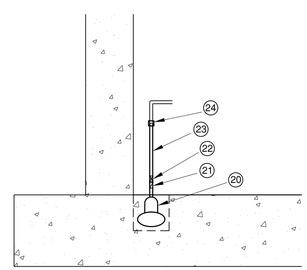

SECTION C/4
SCALE:1/2" = 1'

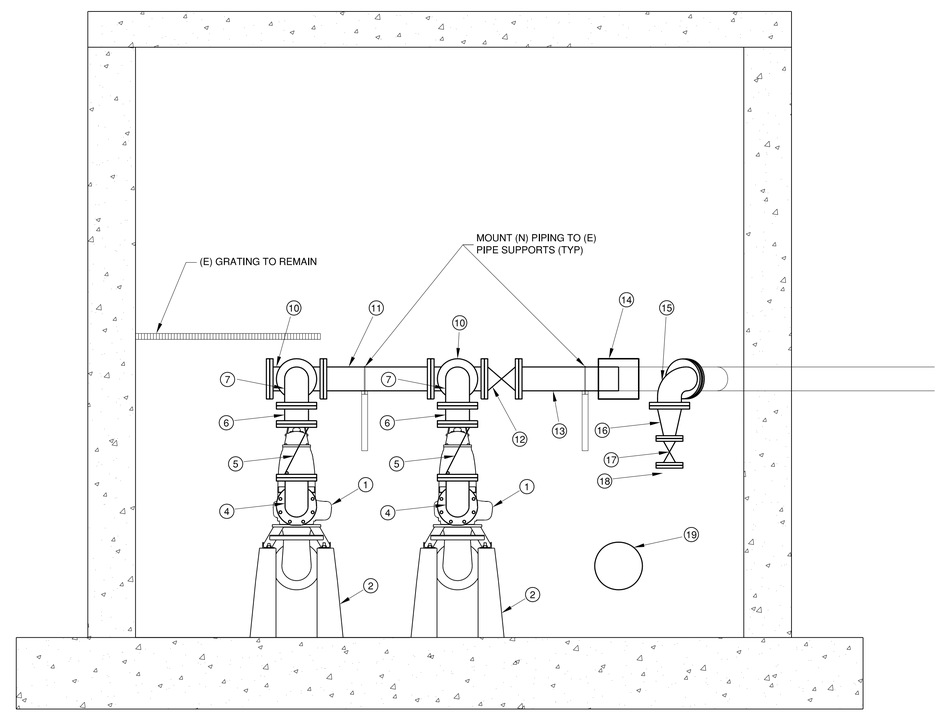

SECTION B/4
SCALE:1/2" = 1'

SHEET NOTES

1. FLYGT NT 3153 LT (15 HP)
2. PUMP BASE, SEE DETAIL 2 ON SHEET 14
3. 10" GATE VALVE, FL, TYP OF 2
4. 8" DI ELBOW, FL
5. 8" CHECK VALVE, FL
6. 8" DIP, FL, FIELD VERIFY LENGTH
7. 8" DI ELBOW, FL
8. 8" GATE VALVE, FL
9. 8" DIP, FL, FIELD VERIFY LENGTH
10. 8" DI TEE, FL, TYP OF 2
11. 8" DIP, FL, FIELD VERIFY LENGTH
12. 8" GATE VALVE, FL
13. 8" DIP, FL X PE, FIELD VERIFY LENGTH
14. RESTRAINED BOLTED COUPLING, DRESSER STYLE 711 OR EQUAL
15. 8" DI TEE, FL X MJ
16. 8" X 4" DI REDUCER, FL
17. 4" GATE VALVE, FL
18. 4" BLIND FLANGE W/ CAMLOCK CONNECTION
19. 10" BLIND FLANGE
20. SUMP PUMP, BARNES MODEL SE411, 0.4 HP
21. 1 ¼" SCH 80 PVC CHECK VALVE, SPEARS MODEL TRUE UNION 2000 OR EQUAL
22. 1 ¼" SCH 80 PVC BALL VALVE, SPEARS MODEL TRUE UNION 2000 OR EQUAL
23. 1 ¼" SCH 80 PVC UNION
24. 1 ¼" SCH 80 PVC

NO	REVISIONS	DATE	APPR
1			
2			
3			
4			
5			
6			
7			

REGISTERED PROFESSIONAL ENGINEER BENJAMIN L. SHICK No. 88813 Exp. 9-30-13 CIVIL STATE OF CALIFORNIA

Schaaf & Wheeler
CONSULTING CIVIL ENGINEERS
100 N. WINCHESTER BLVD., STE. 200
SANTA CLARA, CA 95050
(408) 246-4848

CITY OF ALAMEDA
SEWER PUMP STATIONS BACKUP GENERATOR INSTALLATION, PHASE 1
CATALINA IMPROVEMENT PLAN

DATE: 09/28/11
SCALE: AS SHOWN
DESIGN: GMA
DRAWN: GMA
CHECKED: BLS

DWG 9348 CASE 95

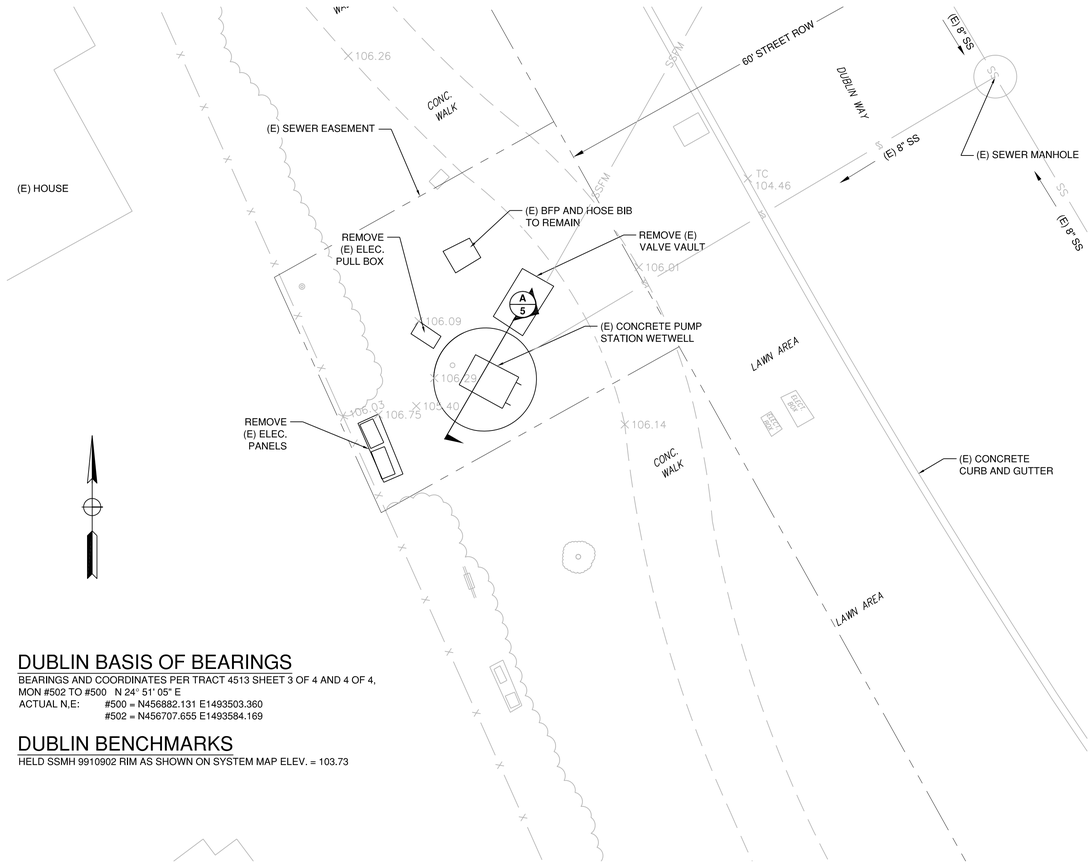

DUBLIN BASIS OF BEARINGS

BEARINGS AND COORDINATES PER TRACT 4513 SHEET 3 OF 4 AND 4 OF 4,
MON #502 TO #500 N 24° 51' 05" E
ACTUAL N,E: #500 = N456882.131 E1493503.360
#502 = N456707.655 E1493584.169

DUBLIN BENCHMARKS

HELD SSMH 9910902 RIM AS SHOWN ON SYSTEM MAP ELEV. = 103.73

EXISTING SITE PLAN

SCALE: 1" = 5'

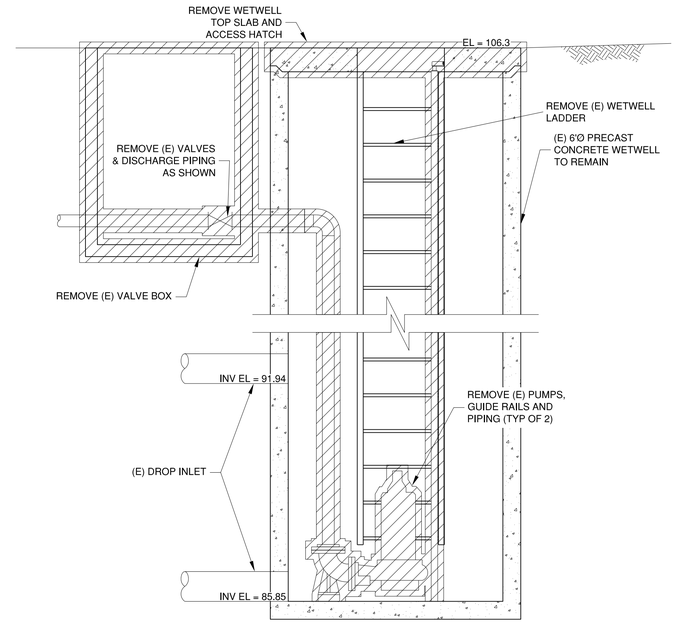

SECTION A/5

SCALE: 1/2" = 1'

NOTES:

1. CONTRACTOR SHALL PROVIDE CONTINUOUS PUMPING CAPACITY FROM THE TIME WHEN THE EXISTING STATION IS TAKEN OFFLINE UNTIL THE IMPROVEMENTS HAVE BEEN ACCEPTED BY THE CITY.
2. CONTRACTOR SHALL PROVIDE A MINIMUM FIRM STATION CAPACITY OF 265 GPM.
3. EXISTING FORCE MAIN DISCHARGE IS LOCATED NEAR THE INTERSECTION OF AUGHINBAUGH WAY AND KOFMAN PKWY ~ 900 FEET FROM THE PUMP STATION. CONTRACTOR SHALL PROVIDE TRAFFIC CONTROL AT ALL TIMES WHEN WORK IS TAKING PLACE IN THE ROADWAY.
4. WHERE DEMOLITION OR REMOVAL OF EQUIPMENT LEAVES VOIDS IN THE CONCRETE STRUCTURE, FILL VOIDS WITH NON-SHRINK GROUT.
5. CONTRACTOR SHALL VERIFY LOCATION OF EXISTING IRRIGATION MAINS PRIOR TO CONSTRUCTION AND NOTIFY THE CITY OF ANY POTENTIAL CONFLICTS.
6. SEE ELECTRICAL SHEETS FOR ADDITIONAL PUMP STATION IMPROVEMENTS.

NO	REVISIONS	DATE	APPR
1			
2			
3			
4			
5			
6			
7			

REGISTERED PROFESSIONAL ENGINEER BENJAMIN L. SHICK No. 68813 Exp. 9-30-13 CIVIL STATE OF CALIFORNIA

Schaaf & Wheeler
CONSULTING CIVIL ENGINEERS
100 N. WINCHESTER BLVD., STE. 200
SANTA CLARA, CA 95050
(408) 246-4848

CITY OF ALAMEDA
SEWER PUMP STATIONS BACKUP GENERATOR INSTALLATION, PHASE 1
DUBLIN DEMOLITION SITE PLAN & SECTIONS

DATE: 09/28/11
SCALE: AS SHOWN
DESIGN: GMA
DRAWN: GMA
CHECKED: BLS

DWG 9348 CASE 95

SHEET 5 OF 27

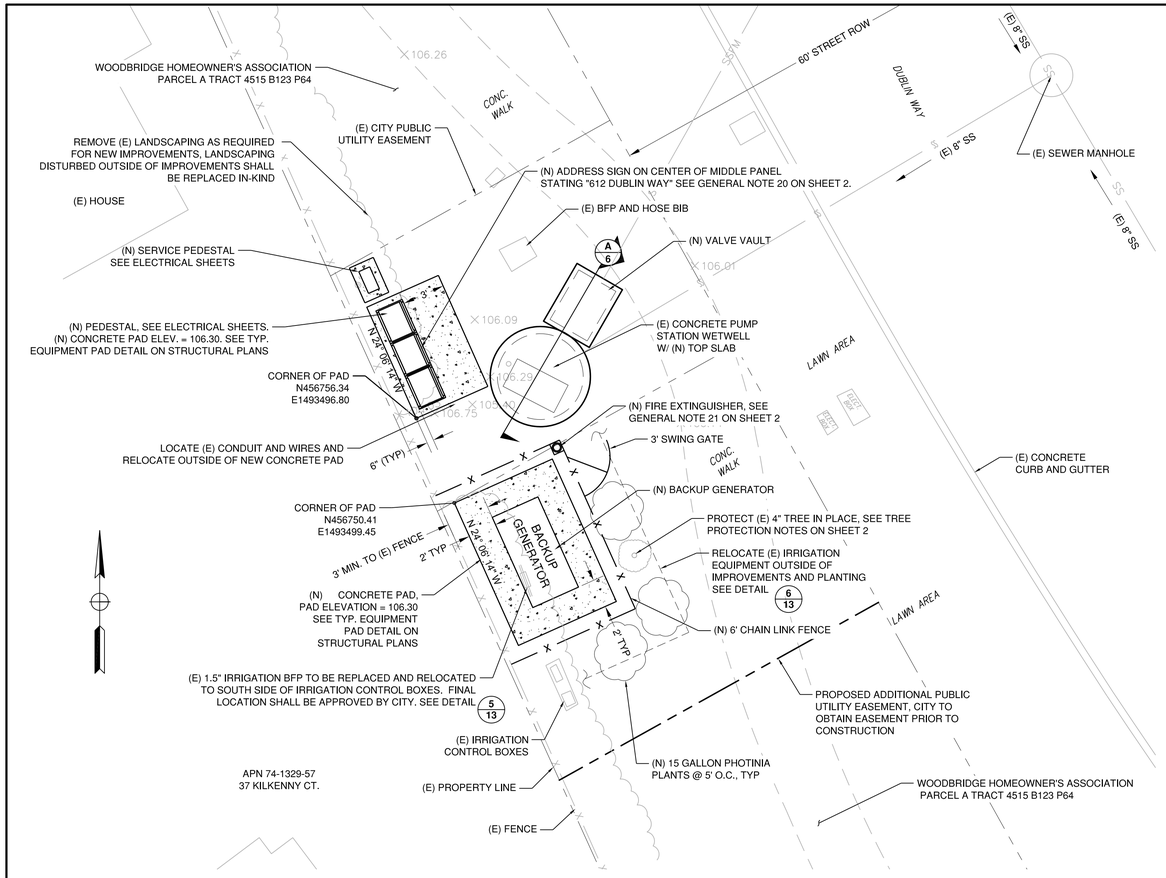

IMPROVEMENT SITE PLAN

SCALE: 1" = 5'

NOTES:

1. CONTRACTOR SHALL REPLACE, ADJUST, AND ADD IRRIGATION HEADS AS NECESSARY SO THAT SPRAY DOES NOT HIT THE GENERATOR OR PEDESTAL, BUT DOES REACH NEW LANDSCAPING.
2. ALL FORCE MAIN CONNECTIONS SHALL BE RESTRAINED AGAINST THRUST.
3. SLOPE DUBLIN CONCRETE PADS AWAY FROM FENCE AT 1%, AND SLOPE SURROUNDING GROUND TO MAINTAIN EXISTING DRAINAGE PATH.
4. CONTRACTOR SHALL INSTALL WOOD LATTICE ATOP ALL RESIDENTIAL FENCES WITHIN THE PROJECT AREA (~40 LF). LATTICE SHALL BE 2' IN HEIGHT. MATERIAL SHALL MATCH EXISTING FENCE. LATTICE SHALL HAVE 2.5" SPACING DIAMOND PATTERN.
5. CHAINLINK FENCE INSERTS SHALL BE BAYWOOD BROWN IN COLOR. PAINT ALL FENCE POSTS TO MATCH.
6. SITE SHALL BE RESTORED TO PRE-CONSTRUCTION CONDITIONS UPON COMPLETION OF PUMP STATION IMPROVEMENTS. ANY DAMAGED OR REMOVED SIDEWALK SHALL BE REPLACED FROM JOINT TO JOINT, AND CONCRETE SHALL BE COLORED TO MATCH EXISTING SIDEWALK.

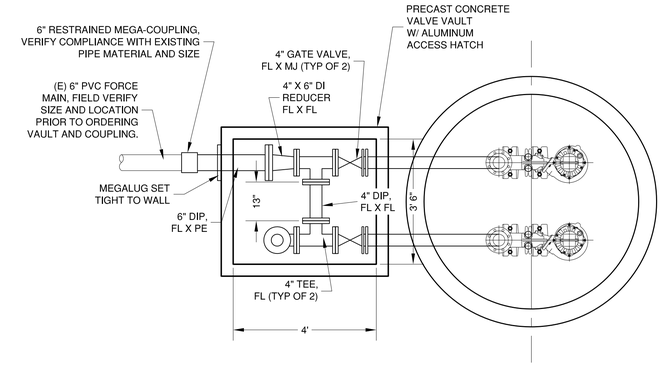

PUMP STATION PLAN

SCALE: 1/2" = 1'

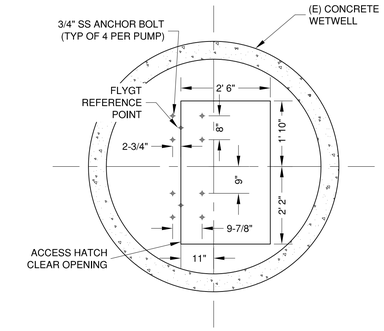

NOTES:

1. ACCESS HATCH DIMENSIONS SHOWN ARE CLEAR OPENINGS.
2. ACCESS HATCH SHALL BE EQUIPPED WITH INTEGRAL FALL PROTECTION.
3. ACCESS HATCH SHALL BE RATED FOR 300 PSF LOADING.
4. HATCH SHALL BE SYRACUSE CASTINGS LDT STYLE PEDESTRIAN RATED HATCH, EQUIPPED WITH FALL PROTECTION, OR APPROVED EQUAL.

PUMP MOUNTING DETAIL 1/6

NO SCALE

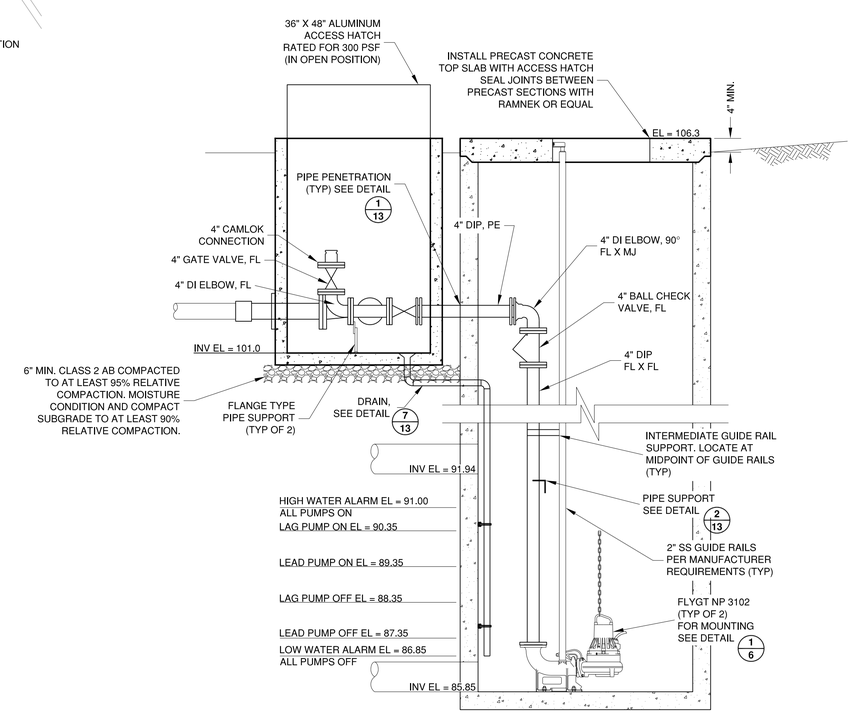

SECTION A/6

SCALE: 1/2" = 1'

NO	REVISIONS	DATE	APPR
1			
2			
3			
4			
5			
6			
7			

REGISTERED PROFESSIONAL ENGINEER
BENJAMIN L. SHICK
No. 68813
Exp. 9-30-13
CIVIL
STATE OF CALIFORNIA

Schaaf & Wheeler
CONSULTING CIVIL ENGINEERS
100 N. WINCHESTER BLVD, STE. 200
SANTA CLARA, CA 95050
(408) 246-4848

CITY OF ALAMEDA
SEWER PUMP STATIONS BACKUP GENERATOR INSTALLATION, PHASE 1
DUBLIN IMPROVEMENT SITE PLAN & SECTIONS

DATE: 09/28/11
SCALE: AS SHOWN
DESIGN: GMA
DRAWN: GMA
CHECKED: BLS

DWG 9348 CASE 95

SHEET 6 OF 27

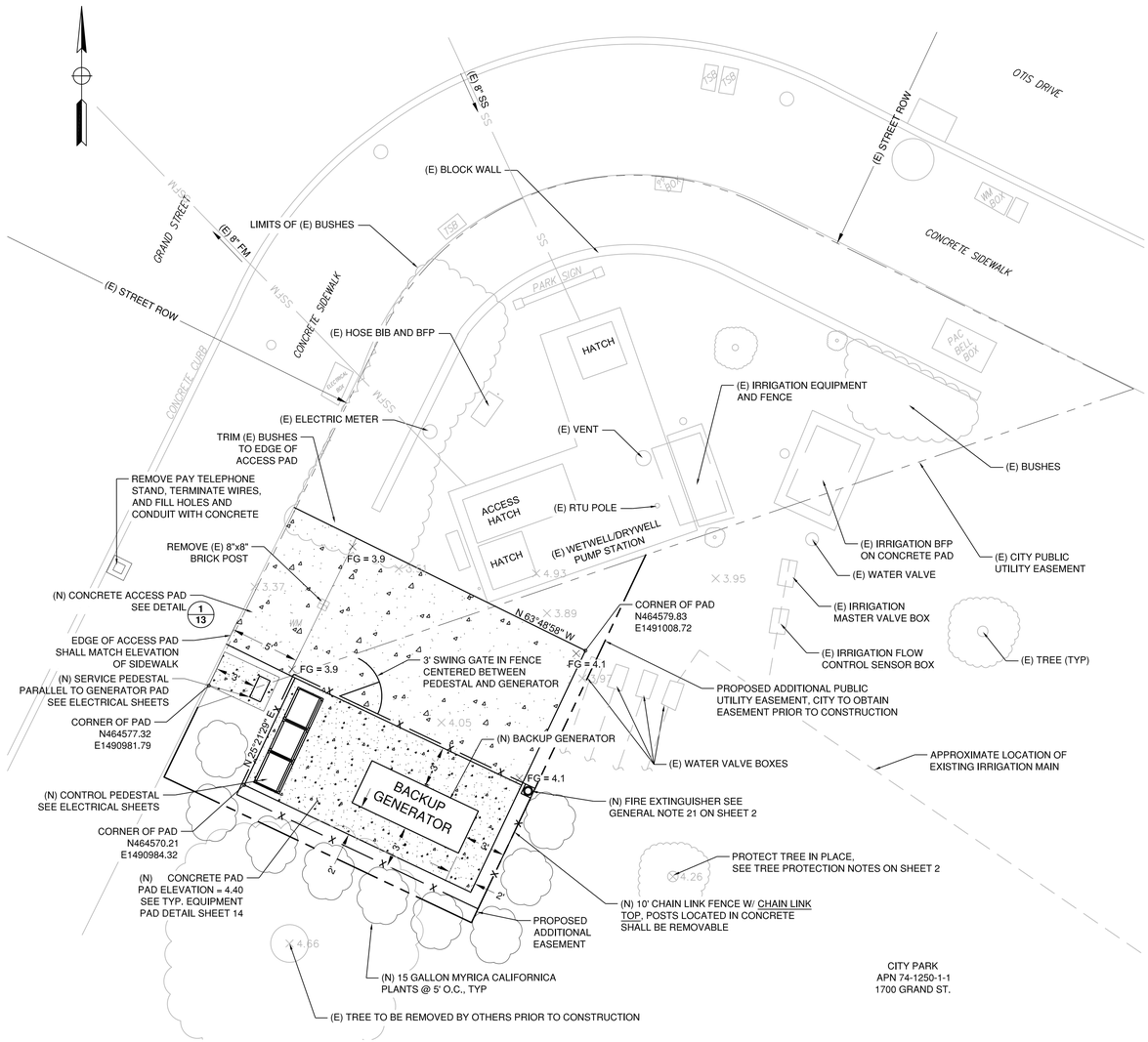

GRAND-OTIS SITE PLAN

SCALE: 1" = 5'

GRAND-OTIS BASIS OF BEARINGS

HELD BEARING AND COORDINATES OF FOUND MONUMENTS ON OTIS DRIVE AS SHOWN ON TRACT 1866 SHEET 7 OF 9.
BEARING = 333° 48' 58"
MON #2 AT INTERSECTION OF GRAND ST. AND OTIS DR. = N464672.28 E1490970.51

GRAND-OTIS BENCHMARKS

HELD SSMH 711 RIM AS SHOWN ON SYSTEM MAP ELEV. = 4.40

NOTES:

1. CONTRACTOR TO REMOVE ALL ELECTRICAL EQUIPMENT FROM DRYWELL INCLUDING, BUT NOT LIMITED TO, ELECTRICAL PANELS, CONDUITS, LIGHTS, AND SWITCHES. FOR DETAILED ELECTRICAL DEMOLITION REQUIREMENTS, REFER TO ELECTRICAL SHEETS.
2. CONTRACTOR SHALL REMOVE EXISTING PUMPS, PADS, SUCTION PIPING AND DISCHARGE PIPING AS SHOWN ON THE DRAWINGS AND AS NECESSARY TO FACILITATE THE IMPROVEMENTS DETAILED HEREIN.
3. CONTRACTOR SHALL REMOVE ALL VENTILATION EQUIPMENT INCLUDING FANS, DUCTING AND RELATED CONDUIT, ETC. WHERE DUCTING PENETRATES PUMP STATION WALLS, CONTRACTOR SHALL TRIM DUCTING FLUSH WITH THE WALL AND FILL WITH NON-SHRINK GROUT. DO NOT REMOVE VENTILATION ELBOW LOCATED IN THE STAIRWELL.
4. CONTRACTOR SHALL PROVIDE CONTINUOUS PUMPING CAPACITY FROM THE TIME WHEN THE EXISTING STATION IS TAKEN OFFLINE UNTIL THE IMPROVEMENTS HAVE BEEN ACCEPTED BY THE CITY.
5. CONTRACTOR SHALL PROVIDE A MINIMUM FIRM STATION CAPACITY OF 740 GPM.
6. NEAREST SSMH FOR BYPASS PUMPING DISCHARGE IS LOCATED APPROXIMATELY 500' NORTH-WEST OF THE PUMP STATION IN OTIS DR. SEE SEWER SYSTEM SCHEMATIC ON SHEET 8. WORK HOURS FOR BYPASS PUMPING WITH ABOVE GROUND PIPING ARE LIMITED TO HOURS WHERE CONTRACTOR PERSONNEL ARE ON SITE TO MONITOR ABOVE GRADE PIPING. CONTRACTOR SHALL COORDINATE REQUIREMENTS WITH CITY.
7. CONTRACTOR SHALL REPLACE OR ADJUST EXISTING IRRIGATION HEADS IN PARK AS NECESSARY SO THAT SPRAY DOES NOT HIT THE GENERATOR OR PEDESTAL, BUT DOES REACH NEW LANDSCAPING. CONTRACTOR SHALL RECEIVE WRITTEN APPROVAL FROM THE CITY FOR IRRIGATION MODIFICATIONS WITHIN THE PARK PRIOR TO IMPLEMENTATION.
8. CONTRACTOR SHALL VERIFY LOCATION OF EXISTING IRRIGATION MAINS PRIOR TO CONSTRUCTION AND NOTIFY THE CITY OF ANY POTENTIAL CONFLICTS.
9. ADDRESS SIGN SHALL BE MOUNTED ON THE WEST SIDE OF THE NEW FENCE IN A LOCATION VISIBLE FROM THE STREET. SIGN SHALL SAY "303 GRAND STREET". SEE GENERAL NOTE 20 ON SHEET 2 FOR ADDITIONAL REQUIREMENTS.
10. SEE ELECTRICAL SHEETS FOR ADDITIONAL PUMP STATION IMPROVEMENTS.

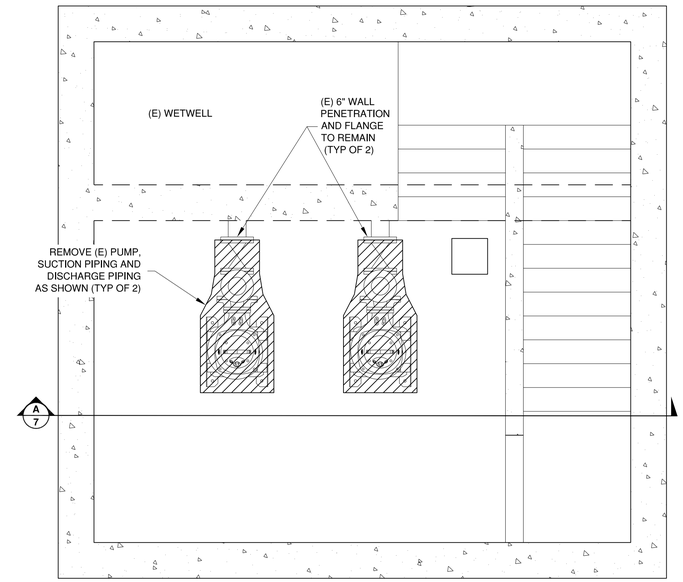

PUMP STATION DEMOLITION PLAN AT PUMP ELEVATION

SCALE: 1/2" = 1'

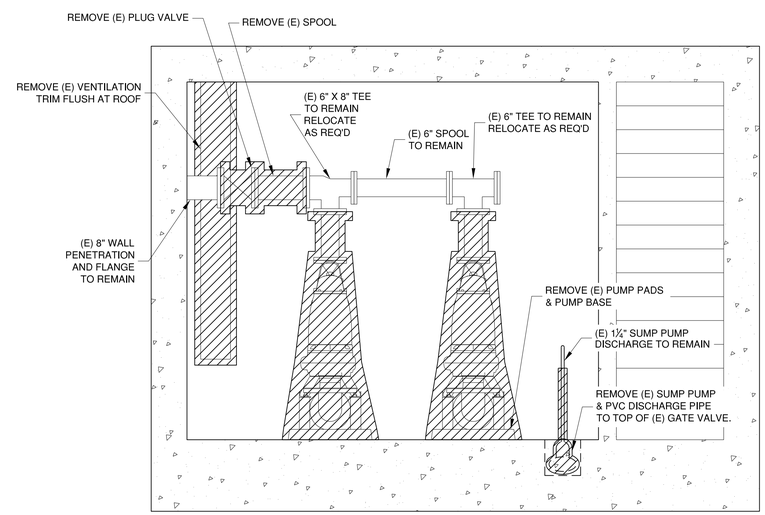

SECTION A/7

SCALE: 1/2" = 1'

NO	REVISIONS	DATE	APPR
1			
2			
3			
4			
5			
6			
7			

REGISTERED PROFESSIONAL ENGINEER BENJAMIN L. SHICK No. 68813 Exp. 9-30-13 CIVIL STATE OF CALIFORNIA

Schaaf & Wheeler
CONSULTING CIVIL ENGINEERS
100 N. WINCHESTER BLVD., STE. 200
SANTA CLARA, CA 95050
(408) 246-4848

CITY OF ALAMEDA
SEWER PUMP STATION BACKUP GENERATOR INSTALLATION, PHASE 1
GRAND-OTIS SITE PLAN & DEMOLITION SECTIONS

DATE: 09/28/11
SCALE: AS SHOWN
DESIGN: GMA
DRAWN: GMA
CHECKED: BLS

DWG 9348 CASE 95

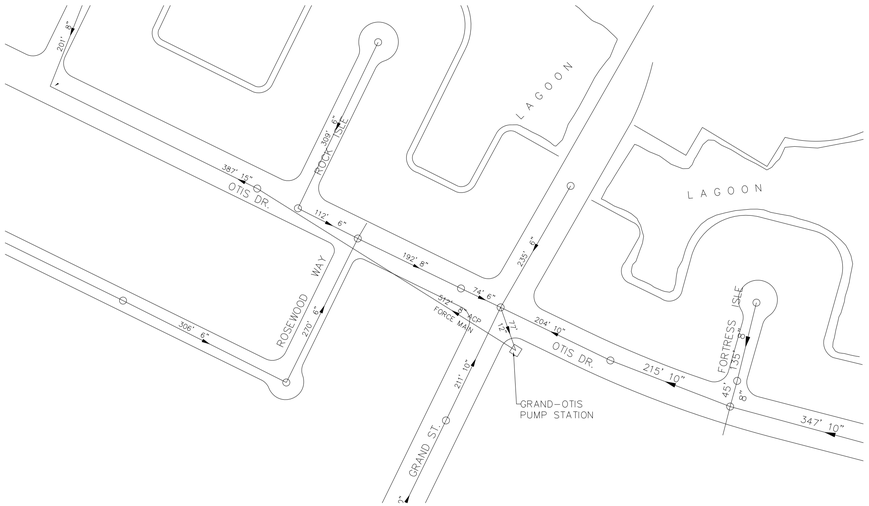

SEWER SYSTEM SCHEMATIC MAP

NO SCALE

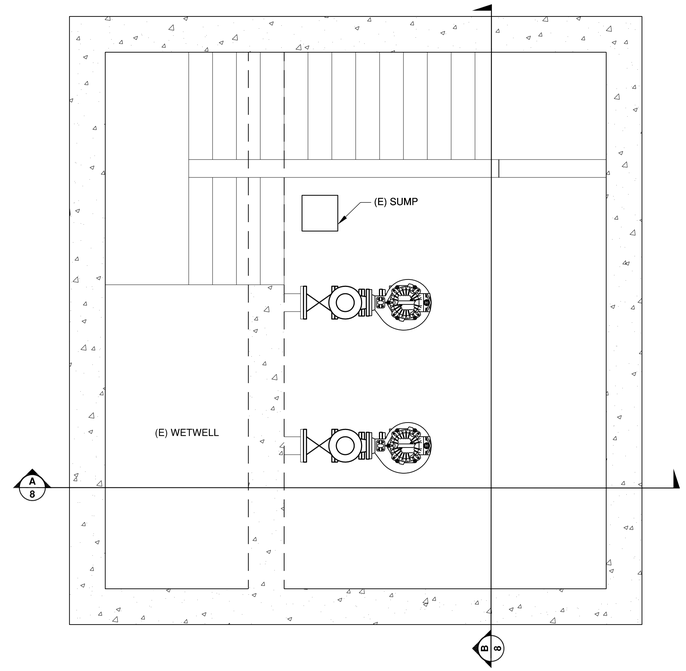

PUMP STATION IMPROVEMENT PLAN AT PUMP ELEVATION

SCALE: 1/2" = 1'

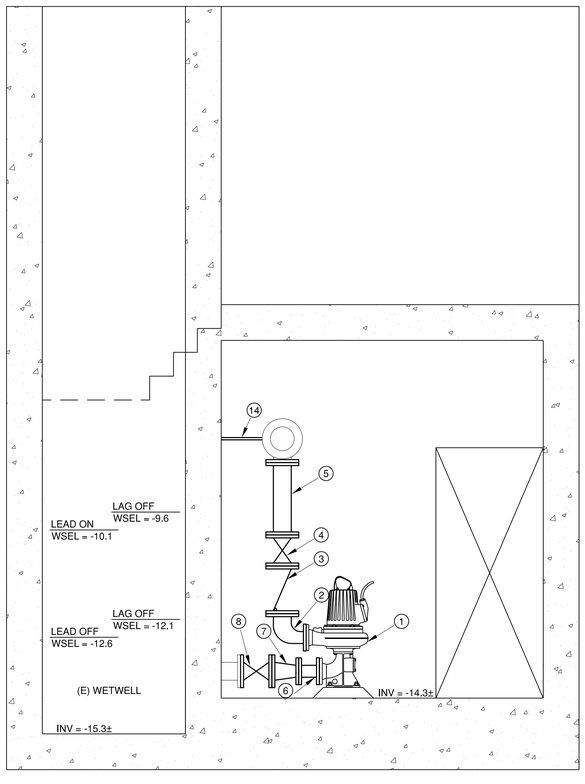

SECTION A/8

SCALE: 1/2" = 1'

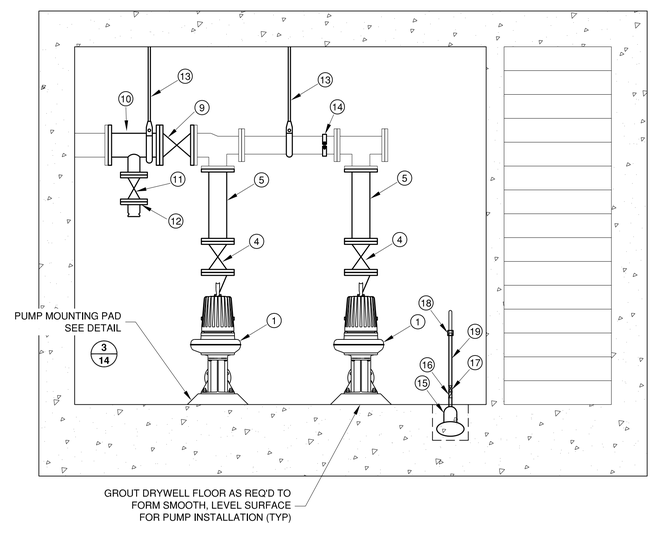

SECTION B/8

SCALE: 1/2" = 1'

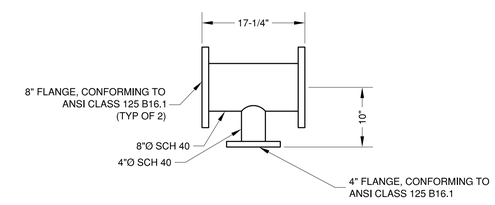

FABRICATED TEE DETAIL 1/8

NO SCALE

SHEET NOTES

1. FLYGT NT 3127 HT (7.4 HP)
2. 4" X 6" DIP ELBOW, FL X FL (TYP OF 2)
3. 6" SWING CHECK VALVE, FL X FL (TYP OF 2)
4. 6" GATE VALVE, FL X FL
5. 6" DIP SPOOL, FL X FL, 2'-½" IN LENGTH, FIELD VERIFY DIMENSIONS PRIOR TO FABRICATION
6. 4" DIP SPOOL, FL X FL, 7" IN LENGTH, FIELD VERIFY DIMENSIONS PRIOR TO FABRICATION (TYP OF 2)
7. 6" X 4" DIP CONCENTRIC REDUCER, FL X FL (TYP OF 2)
8. 6" GATE VALVE, FL X FL (TYP OF 2)
9. 8" GATE VALVE, FL X FL
10. 8" x 4" FABRICATED TEE, FL X FL, SEE DETAIL 1/8 FOR DIMENSIONS
11. 4" GATE VALVE, FL X FL
12. 4" BLIND FLANGE W/ 4" CAMLOCK CONNECTION
13. VERTICAL PIPE SUPPORT W/CLEVIS, ROD (GRINNELL FIG 260 OR EQUAL) & CONCRETE CLEVIS PLATE (GRINNELL FIG 49 OR EQUAL) BOLTED TO CEILING. ASSEMBLY AND HARDWARE SHALL BE GALVANIZED STEEL. BOLTS SHALL BE EPOXY ADHESIVE ANCHOR BOLTS: SIMPSON STRONG-TIE "SET-XP" EPOXY, HILTI "HIT-RE-500-SD" EPOXY OR APPROVED EQUAL. SEE PROJECT SPECIFICATIONS.
14. BRACE TO WALL USING SWAY STRUT BOLTED TO WALL (GRINNELL FIG 222 OR EQUAL). ASSEMBLY AND HARDWARE SHALL BE GALVANIZED STEEL. BOLTS SHALL BE AS SPECIFIED ON NOTE 13 FOR VERTICAL PIPE SUPPORT.
15. SUMP PUMP, BARNES MODEL SE411, 0.4 HP
16. 1 ¼" SCH 80 PVC CHECK VALVE, SPEARS MODEL TRUE UNION 2000
17. 1 ¼" SCH 80 PVC BALL VALVE, SPEARS MODEL TRUE UNION 2000
18. 1 ¼" SCH 80 PVC UNION
19. 1 ¼" SCH 40 PVC

NO	REVISIONS	DATE	APPR
1			
2			
3			
4			
5			
6			
7			

REGISTERED PROFESSIONAL ENGINEER ★ BENJAMIN L. SHICK ★ No. 88813 Exp. 9-30-13 ★ CIVIL ★ STATE OF CALIFORNIA

Schaaf & Wheeler
CONSULTING CIVIL ENGINEERS
100 N. WINCHESTER BLVD, STE. 200
SANTA CLARA, CA 95050
(408) 246-4848

CITY OF ALAMEDA
SEWER PUMP STATION BACKUP GENERATOR INSTALLATION, PHASE 1
GRAND-OTIS IMPROVEMENT SECTIONS

DATE: 09/28/11
SCALE: AS SHOWN
DESIGN: GMA
DRAWN: GMA
CHECKED: BLS

DWG 9348 CASE 95

SHEET 8 OF 27

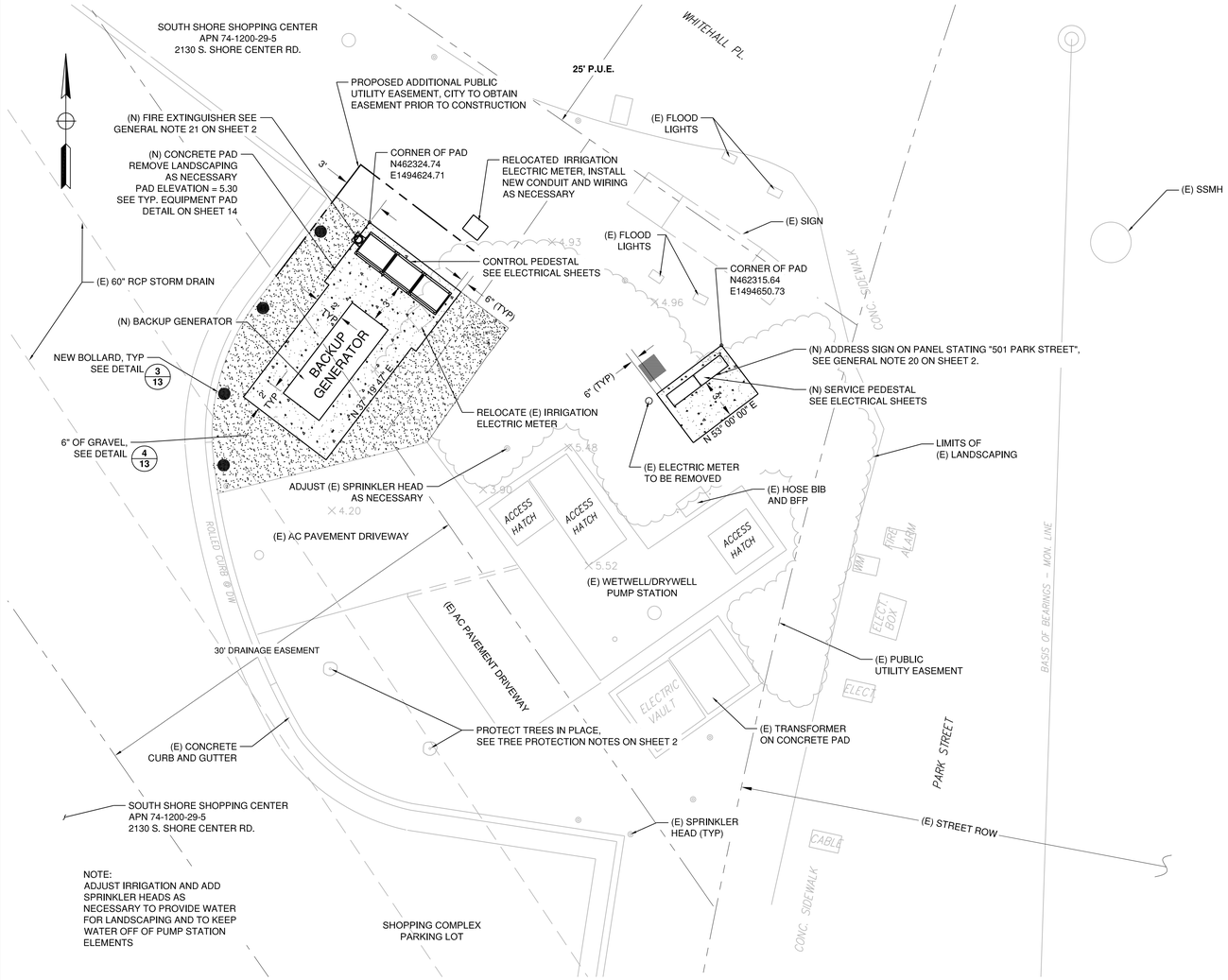

NOTE:
ADJUST IRRIGATION AND ADD SPRINKLER HEADS AS NECESSARY TO PROVIDE WATER FOR LANDSCAPING AND TO KEEP WATER OFF OF PUMP STATION ELEMENTS

PARK-OTIS BASIS OF BEARINGS

HELD MONUMENT LINE BEARING N 01° 52' 42" E AS SHOWN ON TRACT 1866 SHEET 9 OF 9. HELD COORDINATE VALUE FOR MONUMENT (500/4500) AS N462338.30 E1494676.61

PARK-OTIS BENCHMARKS

HELD SSMH 717 RIM AS SHOWN ON SYSTEM MAP ELEV. = 4.34

PARK-OTIS SITE PLAN

SCALE: 1" = 5'

NOTES:

1. CONTRACTOR TO REMOVE ALL ELECTRICAL EQUIPMENT FROM DRYWELL INCLUDING, BUT NOT LIMITED TO, ELECTRICAL PANELS, CONDUITS, LIGHTS, AND SWITCHES. FOR DETAILED ELECTRICAL DEMOLITION REQUIREMENTS, REFER TO ELECTRICAL SHEETS.
2. CONTRACTOR SHALL REMOVE EXISTING PUMPS, PADS, SUCTION PIPING AND DISCHARGE PIPING AS SHOWN ON THE DRAWINGS AND AS NECESSARY TO FACILITATE THE IMPROVEMENTS DETAILED HEREIN.
3. CONTRACTOR SHALL REMOVE ALL VENTILATION EQUIPMENT INCLUDING FANS, DUCTING AND RELATED CONDUIT, ETC. WHERE DUCTING PENETRATES PUMP STATION ROOF, CONTRACTOR SHALL TRIM DUCTING FLUSH WITH THE WALL AND FILL WITH NON-SHRINK GROUT. DO NOT REMOVE VENTILATION ELBOW LOCATED IN THE STAIRWELL.
4. CONTRACTOR SHALL PROVIDE CONTINUOUS PUMPING CAPACITY FROM THE TIME WHEN THE EXISTING STATION IS TAKEN OFFLINE UNTIL THE IMPROVEMENTS HAVE BEEN ACCEPTED BY THE CITY.
5. CONTRACTOR SHALL PROVIDE A MINIMUM FIRM STATION CAPACITY OF 950 GPM.
6. NEAREST SSMH FOR BYPASS PUMPING DISCHARGE IS LOCATED APPROXIMATELY 500' NORTH-EAST OF THE PUMP STATION IN PARK ST. SEE SEWER SCHEMATIC ON SHEET10.
7. CONTRACTOR SHALL PROVIDE TRAFFIC CONTROL, IN CONFORMANCE WITH THE REQUIREMENTS OF THE CONTRACT DOCUMENTS, WHENEVER PERFORMING WORK WITHIN THE STREET.
8. SEE ELECTRICAL PLANS FOR ADDITIONAL IMPROVEMENTS.

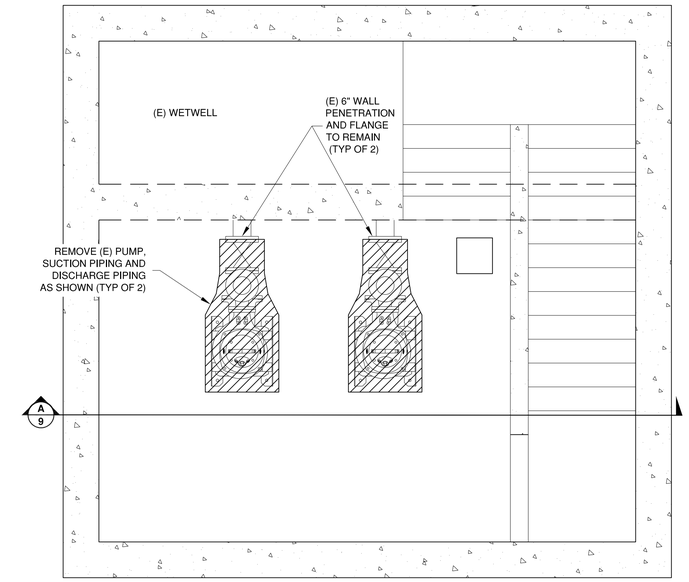

PUMP STATION DEMOLITION PLAN AT PUMP ELEVATION

SCALE: 1/2" = 1'

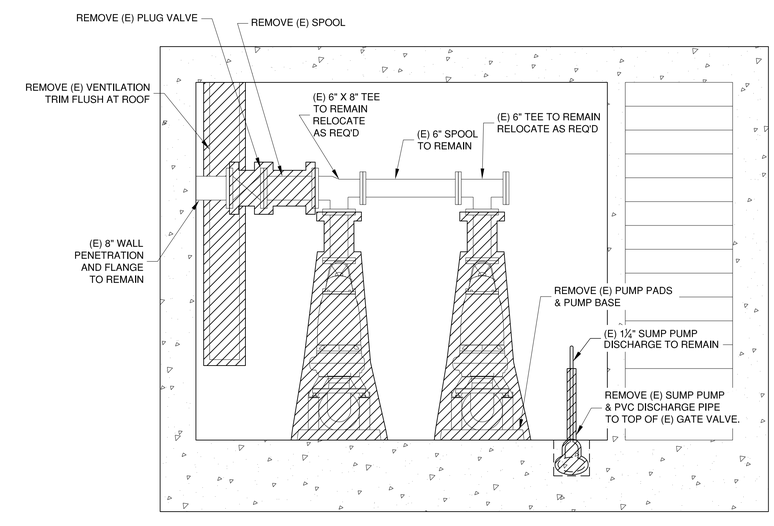

SECTION A/9

SCALE: 1/2" = 1'

NO	REVISIONS	DATE	APPR
1			
2			
3			
4			
5			
6			
7			

REGISTERED PROFESSIONAL ENGINEER BENJAMIN L. SHICK No. 68813 Exp. 9-30-13 CIVIL STATE OF CALIFORNIA

Schaaf & Wheeler
CONSULTING CIVIL ENGINEERS
100 N. WINCHESTER BLVD., STE. 200
SANTA CLARA, CA 95050
(408) 246-4848

CITY OF ALAMEDA
SEWER PUMP STATION BACKUP GENERATOR INSTALLATION, PHASE 1
PARK-OTIS SITE PLAN & DEMOLITION SECTIONS

DATE: 09/28/11
SCALE: AS SHOWN
DESIGN: GMA
DRAWN: GMA
CHECKED: BLS

DWG 9348 CASE 95

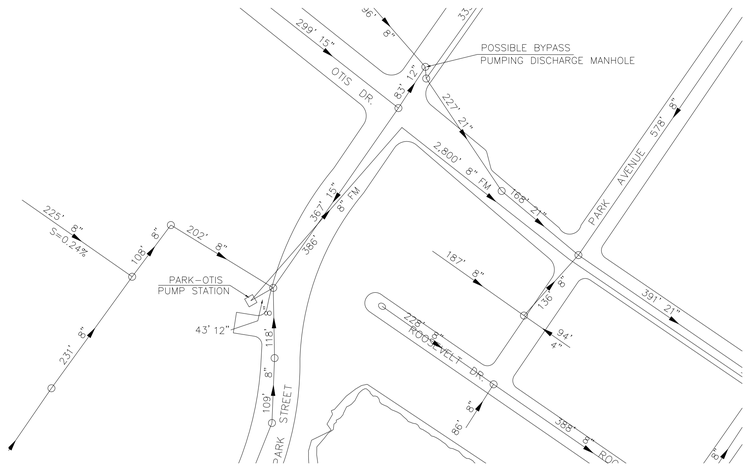

SEWER SYSTEM SCHEMATIC MAP

NO SCALE

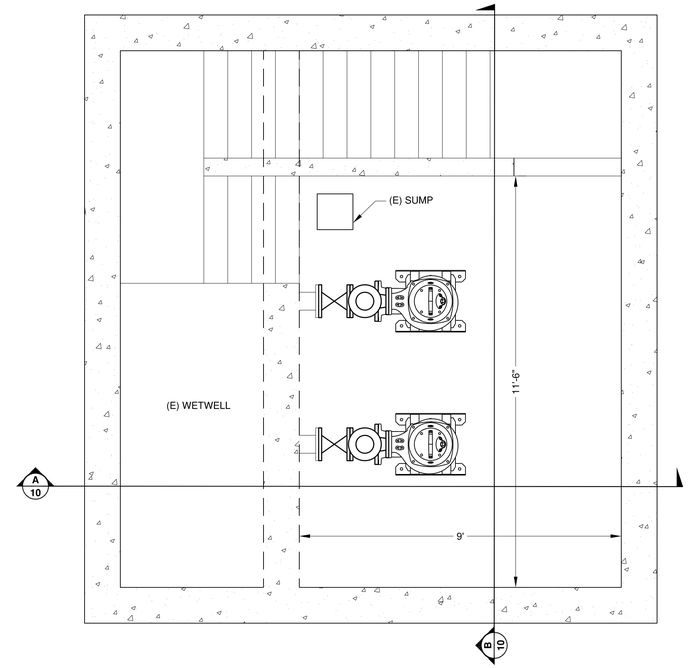

PUMP STATION IMPROVEMENT PLAN AT PUMP ELEVATION

SCALE: 1/2" = 1'

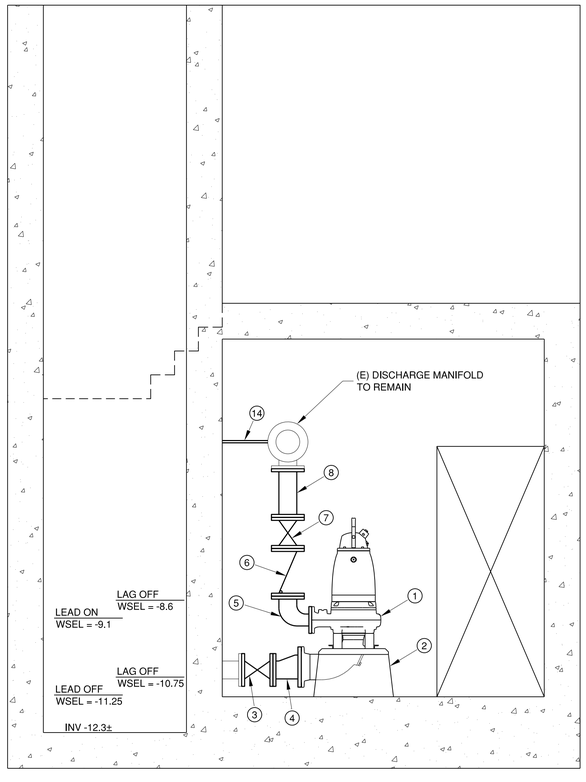

SECTION A/10

SCALE: 1/2" = 1'

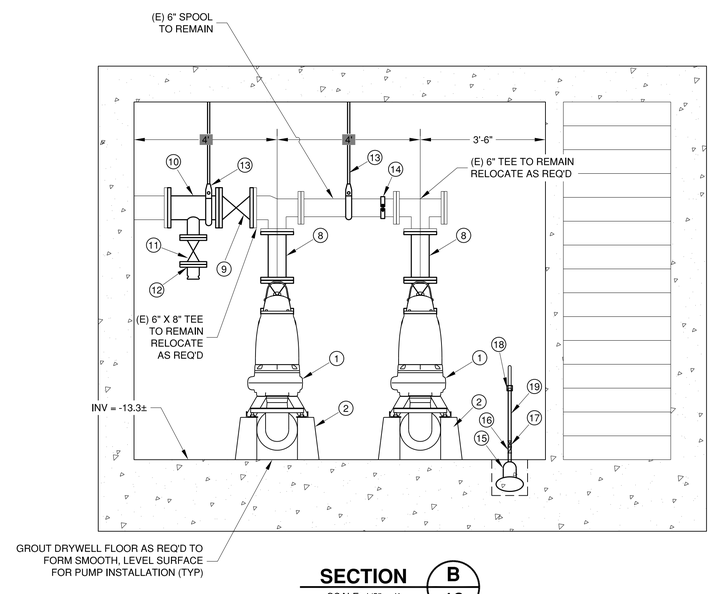

SECTION B/10

SCALE: 1/2" = 1'

SHEET NOTES

1. FLYGT NT 3171 HT (34 HP)
2. PUMP BASE, SEE DETAIL 1 ON SHEET 14
3. 6" GATE VALVE, FL X FL (TYP OF 2)
4. 6" X 8" FABRICATED ECCENTRIC REDUCER, FIELD VERIFY DIMENSIONS PRIOR TO FABRICATION (TYP OF 2)
5. 4" X 6" DIP ELBOW, FL X FL (TYP OF 2)
6. 6" SWING CHECK VALVE, FL X FL (TYP OF 2)
7. 6" GATE VALVE, FL X FL (TYP OF 2)
8. 6" DIP SPOOL, FL X FL, 1'-4¼" IN LENGTH. FIELD VERIFY PRIOR TO FABRICATION
9. 8" GATE VALVE, FL X FL
10. 8" x 4" FABRICATED TEE, FL X FL, SEE DETAIL 1 ON SHEET 8 FOR DIMENSIONS
11. 4" GATE VALVE, FL X FL
12. 4" BLIND FALNGE W/ 4" CAMLOCK CONNECTION
13. VERTICAL PIPE SUPPORT W/CLEVIS, ROD (GRINNELL FIG 260 OR EQUAL) & CONCRETE CLEVIS PLATE (GRINNELL FIG 49 OR EQUAL) BOLTED TO CEILING. ASSEMBLY AND HARDWARE SHALL BE GALVANIZED STEEL. BOLTS SHALL BE EPOXY ADHESIVE ANCHOR BOLTS: SIMPSON STRONG-TIE "SET-XP" EPOXY, HILTI "HIT-RE-500-SD" EPOXY OR APPROVED EQUAL. SEE PROJECT SPECIFICATIONS.
14. BRACE TO WALL USING SWAY STRUT BOLTED TO WALL (GRINNELL FIG 222 OR EQUAL). ASSEMBLY AND HARDWARE SHALL BE GALVANIZED STEEL. BOLTS SHALL BE AS SPECIFIED ON NOTE 13 FOR VERTICAL PIPE SUPPORT.
15. SUMP PUMP, BARNES MODEL SE411, 0.4 HP
16. 1 ¼" SCH 80 PVC CHECK VALVE, SPEARS MODEL TRUE UNION 2000
17. 1 ¼" SCH 80 PVC BALL VALVE, SPEARS MODEL TRUE UNION 2000
18. 1 ¼" SCH 80 PVC UNION
19. 1 ¼" SCH 40 PVC

NO	REVISIONS	DATE	APPR
1			
2			
3			
4			
5			
6			
7			

REGISTERED PROFESSIONAL ENGINEER BENJAMIN L. SHICK No. 68813 Exp. 9-30-13 CIVIL STATE OF CALIFORNIA

Schaaf & Wheeler
CONSULTING CIVIL ENGINEERS
100 N. WINCHESTER BLVD, STE. 200
SANTA CLARA, CA 95050
(408) 246-4848

CITY OF ALAMEDA
SEWER PUMP STATION BACKUP GENERATOR INSTALLATION, PHASE 1
PARK-OTIS IMPROVEMENT SECTIONS

DATE: 09/28/11
SCALE: AS SHOWN
DESIGN: GMA
DRAWN: GMA
CHECKED: BLS

DWG 9348 CASE 95

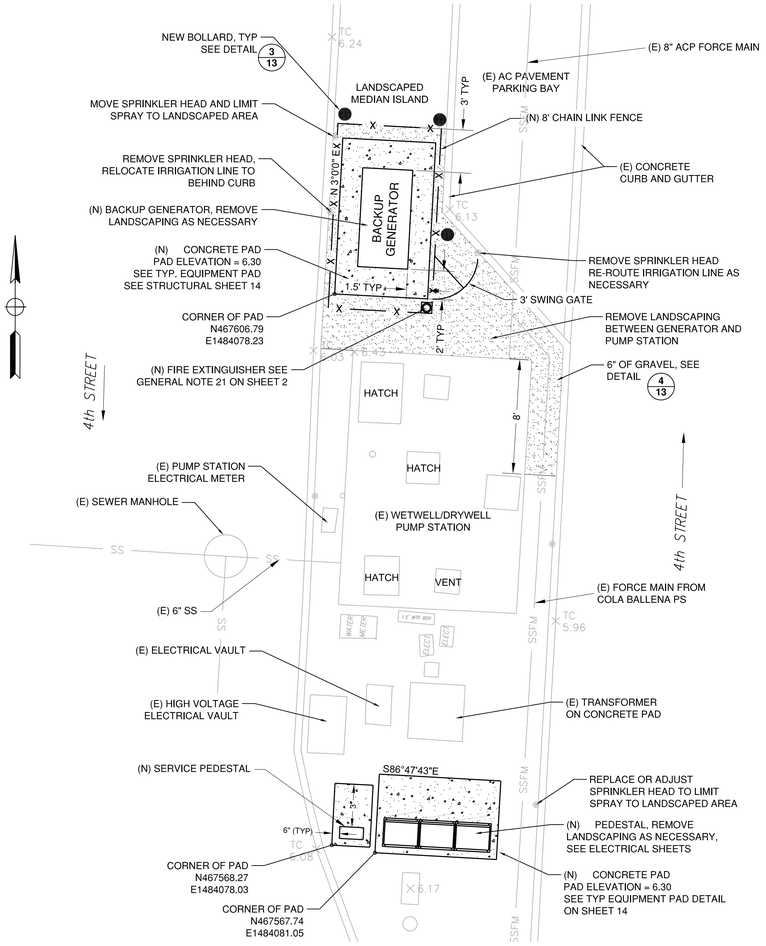

TIDEWAY SITE PLAN

SCALE: 1" = 5'

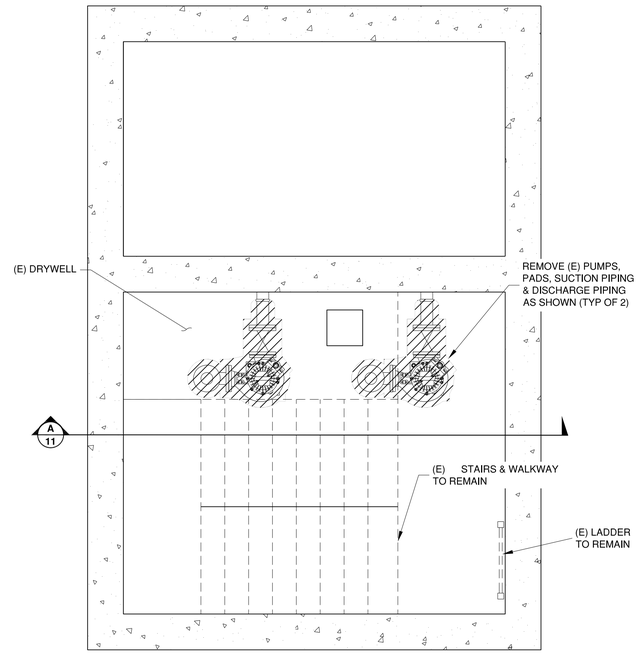

PUMP STATION DEMOLITION PLAN AT PUMP ELEVATION

SCALE: 1/2" = 1'

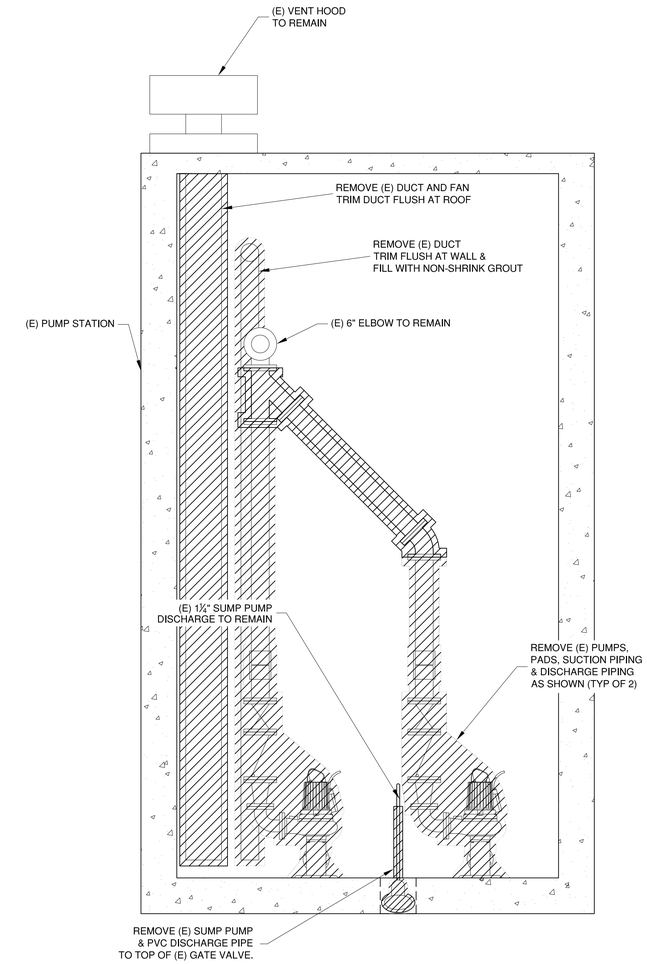

SECTION A/11

SCALE: 1/2" = 1'

TIDEWAY BASIS OF BEARINGS

HELD BEARING AND COORDINATES FOR BALLENA BLVD. MONUMENTS
AS SHOWN ON TRACT 3105 PAGE 2 OF 4.
BEARING = S 03° 05' 19" W
MON #1 AT INTERSECTION OF BALLENA AND TIDEWAY = N467465.58 E1484088.28

TIDEWAY BENCHMARKS

HELD SSMH 9121401 RIM AS SHOWN ON SYSTEM MAP ELEV. = 5.57

NOTES:

1. CONTRACTOR TO REMOVE ALL ELECTRICAL EQUIPMENT FROM DRYWELL INCLUDING, BUT NOT LIMITED TO, ELECTRICAL PANELS, CONDUITS, LIGHTS, AND SWITCHES. FOR DETAILED ELECTRICAL DEMOLITION REQUIREMENTS, REFER TO ELECTRICAL SHEETS.
2. CONTRACTOR SHALL REMOVE EXISTING PUMPS, PADS, SUCTION PIPING AND DISCHARGE PIPING AS SHOWN ON THE DRAWINGS AND AS NECESSARY TO FACILITATE THE IMPROVEMENTS DETAILED HEREIN.
3. CONTRACTOR SHALL REMOVE ALL VENTILATION EQUIPMENT WITHIN THE DRYWELL INCLUDING FANS, DUCTING AND RELATED CONDUIT, ETC.
4. CONTRACTOR SHALL PROVIDE CONTINUOUS PUMPING CAPACITY FROM THE TIME WHEN THE EXISTING STATION IS TAKEN OFFLINE UNTIL THE IMPROVEMENTS HAVE BEEN ACCEPTED BY THE CITY.
5. NEAREST SSMH FOR BYPASS PUMPING DISCHARGE IS LOCATED APPROXIMATELY 800' NORTH-EAST OF THE PUMP STATION I AS SHOWN ON THE SEWER SYSTEM SCHEMATIC ON SHEET 12 . CONTRACTOR SHALL PROVIDE TRAFFIC CONTROL, IN CONFORMANCE WITH THE REQUIREMENTS OF THE CONTRACT DOCUMENTS, WHENEVER PERFORMING WORK WITHIN THE STREET.
6. CONTRACTOR SHALL PROVIDE A MINIMUM FIRM STATION CAPACITY OF 325 GPM.
7. ADDRESS SIGN SHALL BE MOUNTED ON THE EAST AND WEST SIDE OF THE NEW FENCE IN A LOCATION VISIBLE FROM THE STREET. SIGN SHALL SAY "400 TIDEWAY DRIVE". SEE GENERAL NOTE 20 ON SHEET 2 FOR ADDITIONAL REQUIREMENTS.
8. SEE ELECTRICAL PLANS FOR ADDITIONAL PUMP STATION IMPROVEMENTS.

NO	REVISIONS	DATE	APPR
1			
2			
3			
4			
5			
6			
7			

REGISTERED PROFESSIONAL ENGINEER BENJAMIN L. SHICK No. 68813 Exp. 9-30-13 CIVIL STATE OF CALIFORNIA

Schaaf & Wheeler
CONSULTING CIVIL ENGINEERS
100 N. WINCHESTER BLVD., STE. 200
SANTA CLARA, CA 95050
(408) 246-4848

CITY OF ALAMEDA
SEWER PUMP STATION BACKUP GENERATOR INSTALLATION, PHASE 1
TIDEWAY SITE PLAN & DEMOLITION SECTIONS

DATE: 09/28/11
SCALE: AS SHOWN
DESIGN: GMA
DRAWN: GMA
CHECKED: BLS

DWG 9348 CASE 95

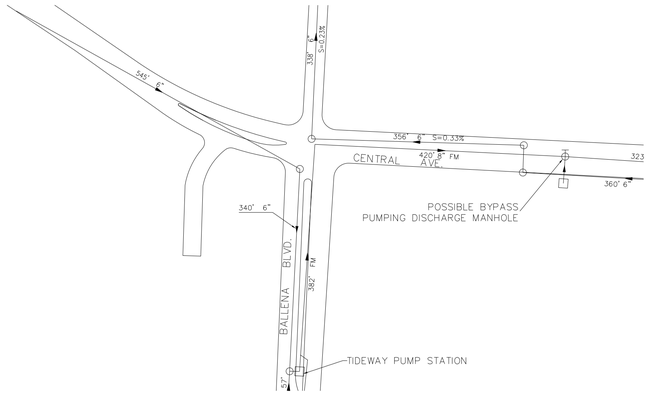

SEWER SYSTEM SCHEMATIC MAP

NO SCALE

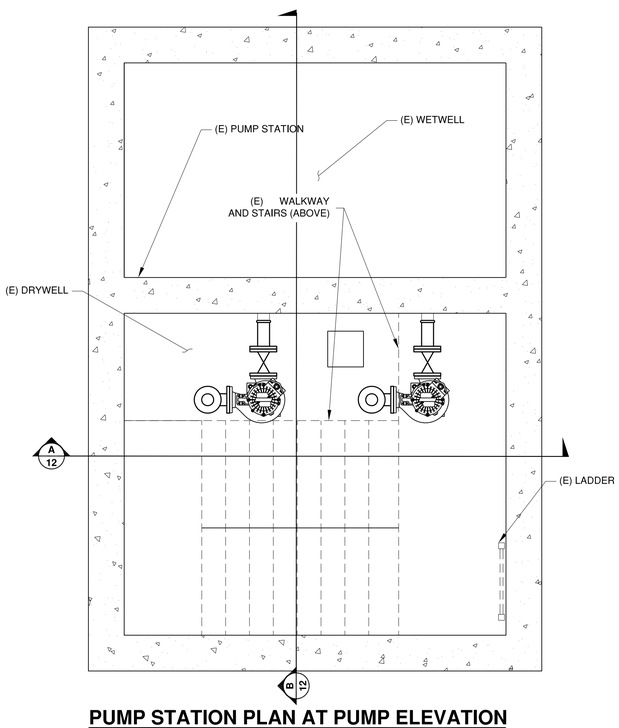

PUMP STATION PLAN AT PUMP ELEVATION

SCALE: 1/2" = 1'

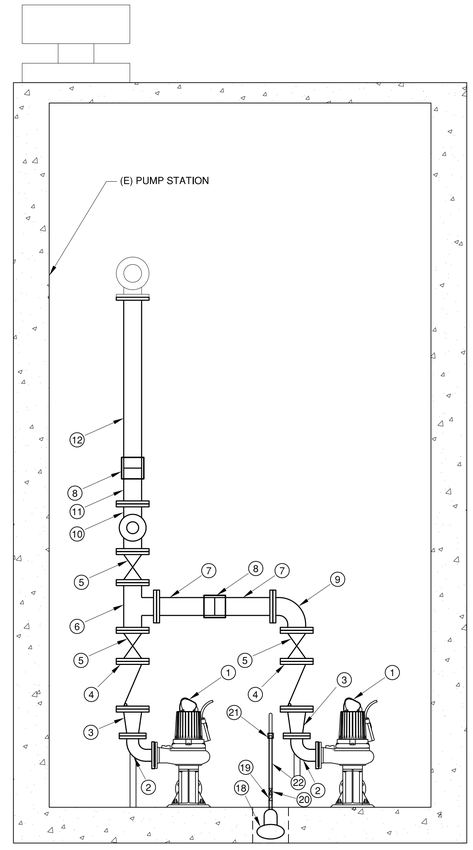

SECTION A/12

SCALE: 1/2" = 1'

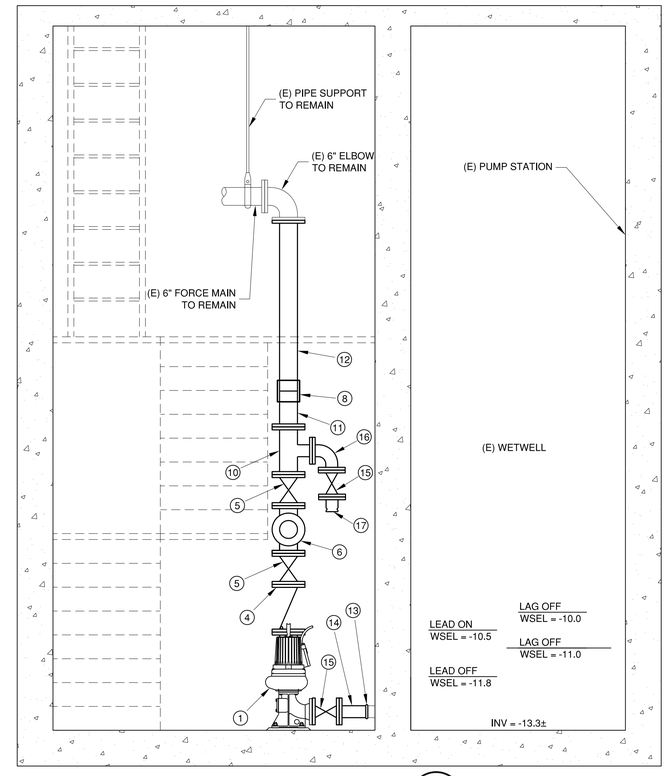

SECTION B/12

SCALE: 1/2" = 1'

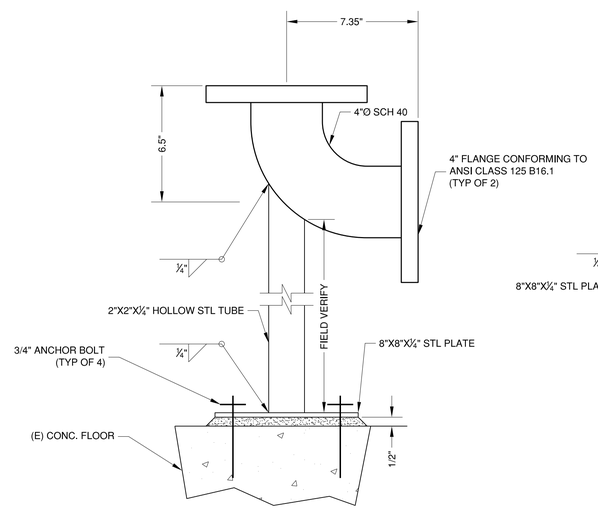

FABRICATED ELBOW DETAIL 1/12

NO SCALE

NOTES:
BOLTS SHALL BE EPOXY ADHESIVE ANCHOR BOLTS: SIMPSON STRONG-TIE "SET-XP" EPOXY, HILTI "HIT-RE-500-SD" EPOXY OR APPROVED EQUAL. SEE PROJECT SPECIFICATIONS.

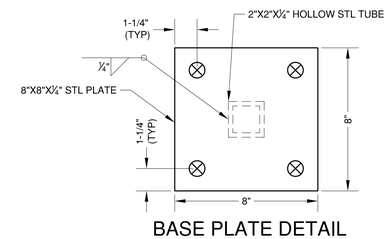

BASE PLATE DETAIL

SHEET NOTES

1. FLYGT NT 3102 MT (3.7 HP)
2. 4" FABRICATED STEEL BASE ELBOW, SEE DETAIL 1/12
3. 4" X 6" DIP REDUCER, FL X FL
4. 6" SWING CHECK VALVE
5. 6" GATE VALVE, FL X FL
6. 6" DIP TEE, FL X FL
7. 6" DIP SPOOL, FL X PE, LENGTH = 1'-7½", FIELD VERIFY
8. DRESSER 138 COUPLING FOR USE ON DIP
9. 6" DIP ELBOW, FL X FL
10. 6" X 4" DIP TEE, FL X FL
11. 6" DIP, FL X PE, 1' IN LENGTH, FIELD VERIFY
12. 6" DIP, FL X PE, LENGTH = 4'-9¼", FIELD VERIFY
13. 4" VICTAULIC COUPLING
14. 4" DIP, FL X GE. LENGTH = 8", FIELD VERIFY
15. 4" GATE VALVE, FL X FL
16. 4" DIP ELBOW, FL X FL
17. 4" CAMLOCK
18. SUMP PUMP, BARNES MODEL SE411, 0.4 HP
19. 1 ¼" SCH 80 PVC CHECK VALVE, SPEARS MODEL TRUE UNION 2000 OR EQUAL
20. 1 ¼" SCH 80 PVC BALL VALVE, SPEARS MODEL TRUE UNION 2000 OR EQUAL
21. 1 ¼" SCH 80 PVC UNION
22. 1 ¼" SCH 80 PVC

NO	REVISIONS	DATE	APPR
1			
2			
3			
4			
5			
6			
7			

REGISTERED PROFESSIONAL ENGINEER BENJAMIN L. SHICK No. 68813 Exp. 9-30-13 CIVIL STATE OF CALIFORNIA

Schaaf & Wheeler
CONSULTING CIVIL ENGINEERS
100 N. WINCHESTER BLVD, STE. 200
SANTA CLARA, CA 95050
(408) 246-4848

CITY OF ALAMEDA
SEWER PUMP STATION BACKUP
GENERATOR INSTALLATION, PHASE 1
TIDEWAY IMPROVEMENT SECTIONS

DATE: 09/28/11
SCALE: AS SHOWN
DESIGN: GMA
DRAWN: GMA
CHECKED: BLS

DWG 9348 CASE 95

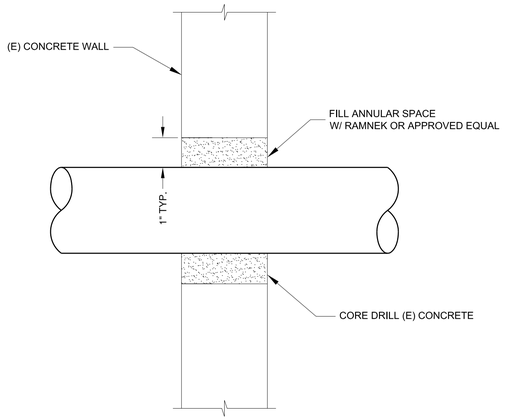

WALL PENETRATION DETAIL 1/13
N.T.S.

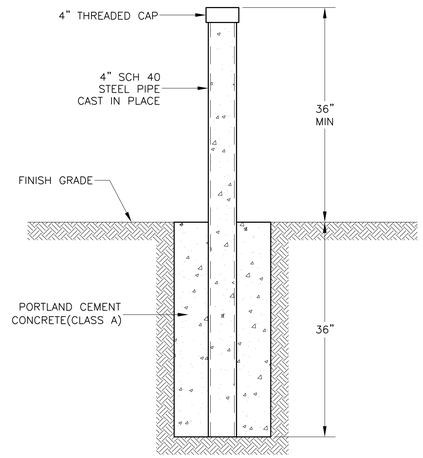

BOLLARD DETAIL 3/13
N.T.S.

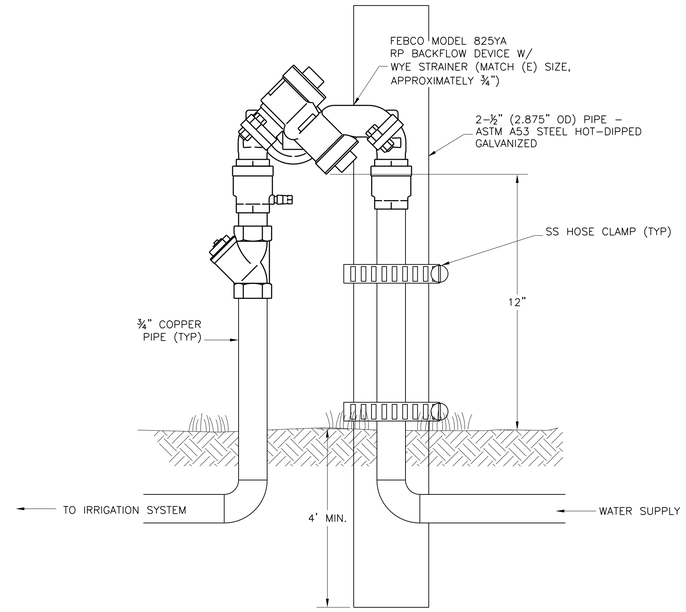

BACK FLOW PREVENTER 5/13
N.T.S.

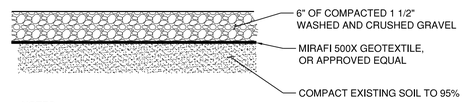

NOTES:

1. ALL EXISTING ROOTS FROM LANDSCAPING SHALL BE REMOVED FROM EXCAVATION. THIS MAY REQUIRE DEEPER EXCAVATION AND COMPACTION.
2. 1-1/2 INCH WASHED ROCK SHALL BE PLACED, GRADED, AND COMPACTED AS SHOWN AND DETAILED IN THE PLANS. ROCK SHALL MEET THE FOLLOWING SIEVE GRADATION:

SIEVE SIZE	PERCENT PASSING
1-1/2" SQUARE	100
1-1/4" SQUARE	90-100
3/4" SQUARE	0-20
3/8" SQUARE	0-2

GRAVEL SURFACE DETAIL 4/13
N.T.S.

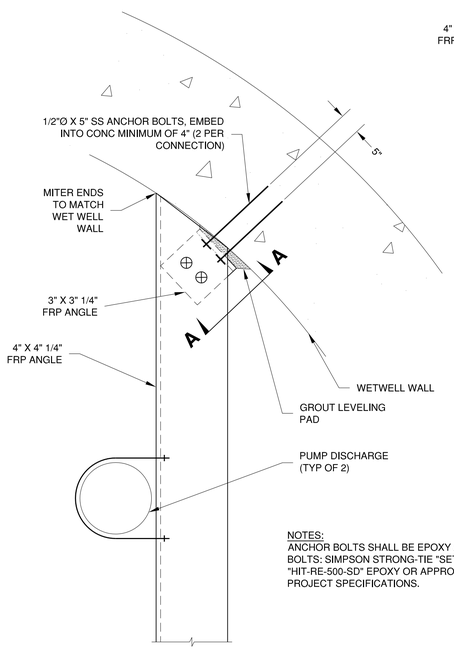

NOTES:
ANCHOR BOLTS SHALL BE EPOXY ADHESIVE ANCHOR BOLTS: SIMPSON STRONG-TIE "SET-XP" EPOXY, HILTI "HIT-RE-500-SD" EPOXY OR APPROVED EQUAL. SEE PROJECT SPECIFICATIONS.

DISCHARGE PIPE BRACE DETAIL 2/13
N.T.S.

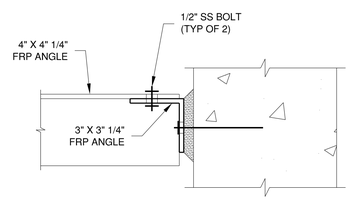

SECTION A-A

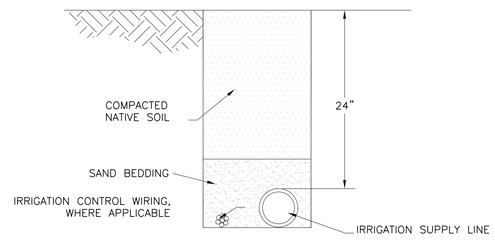

NOTES:
1. WIRE AND PIPE SHALL MATCH EXISTING TYPE AND SIZE
2. BUNDLE AND TAPE WIRE EVERY TEN FEET

IRRIGATION TRENCH DETAIL 6/13
N.T.S.

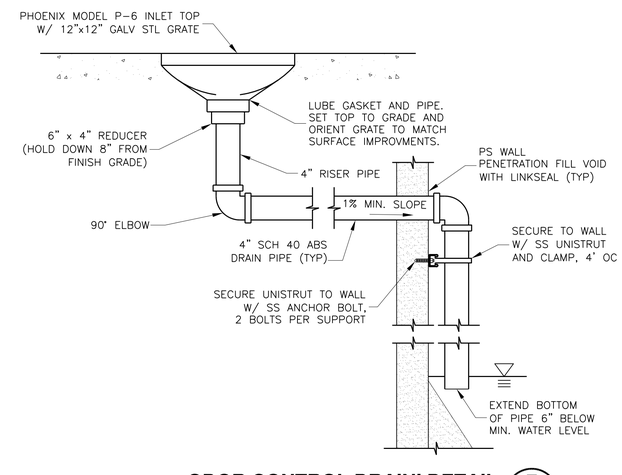

ODOR CONTROL DRAINI DETAIL 7/13
N.T.S.

NO	REVISIONS	DATE	APPR
1			
2			
3			
4			
5			
6			
7			

REGISTERED PROFESSIONAL ENGINEER ★ BENJAMIN L. SHICK ★ No. 88813 Exp. 9-30-13 ★ CIVIL ★ STATE OF CALIFORNIA

Schaaf & Wheeler
CONSULTING CIVIL ENGINEERS
100 N. WINCHESTER BLVD., STE. 200
SANTA CLARA, CA 95050
(408) 246-4848

CITY OF ALAMEDA
SEWER PUMP STATION BACKUP GENERATOR INSTALLATION, PHASE 1
CIVIL DETAILS

DATE: 09/28/11
SCALE: AS SHOWN
DESIGN: GMA
DRAWN: GMA
CHECKED: BLS

DWG 9348 CASE 95

NOTES:
1. CONDITION AT COMBINED EQUIPMENT PAD SHOWN. CONDITION WHERE GENERATOR AND PEDESTAL ARE ON SEPARATE PADS IS SIMILAR.
2. SEE SITE PLANS FOR PAD LOCATIONS, ORIENTATIONS, SIZES, ELEVATIONS, AND EQUIPMENT LAYOUT.

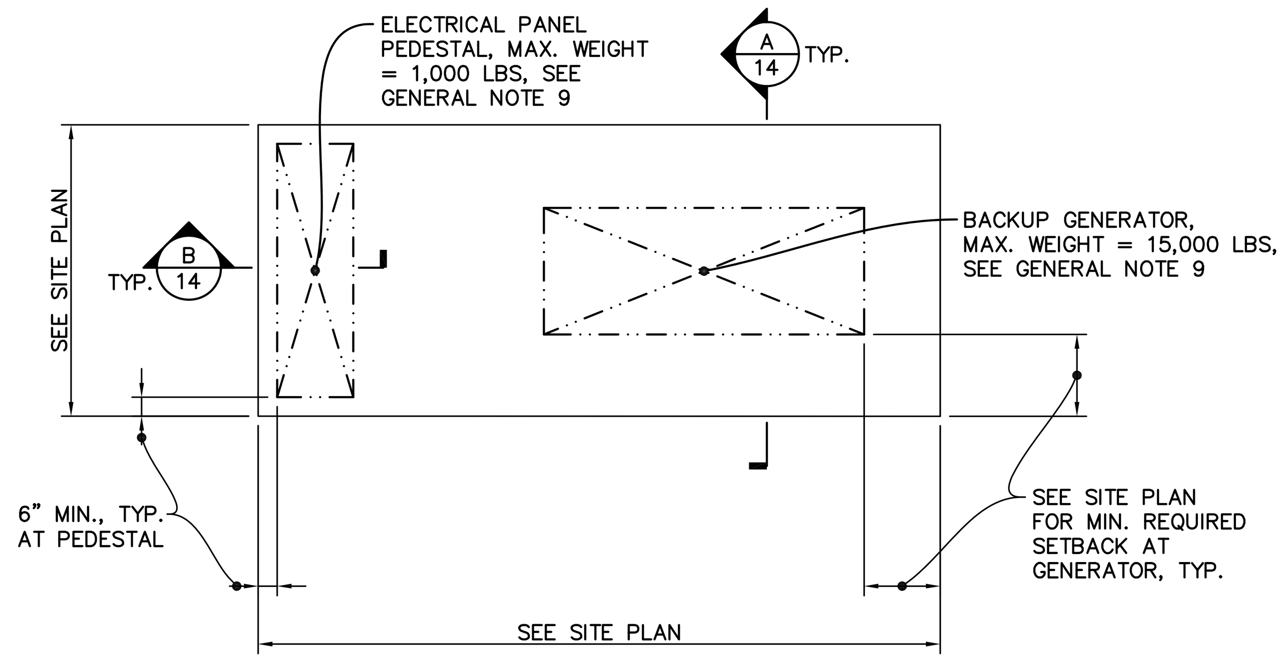

TYPICAL EQUIPMENT PAD PLAN
1/4" = 1'–0"

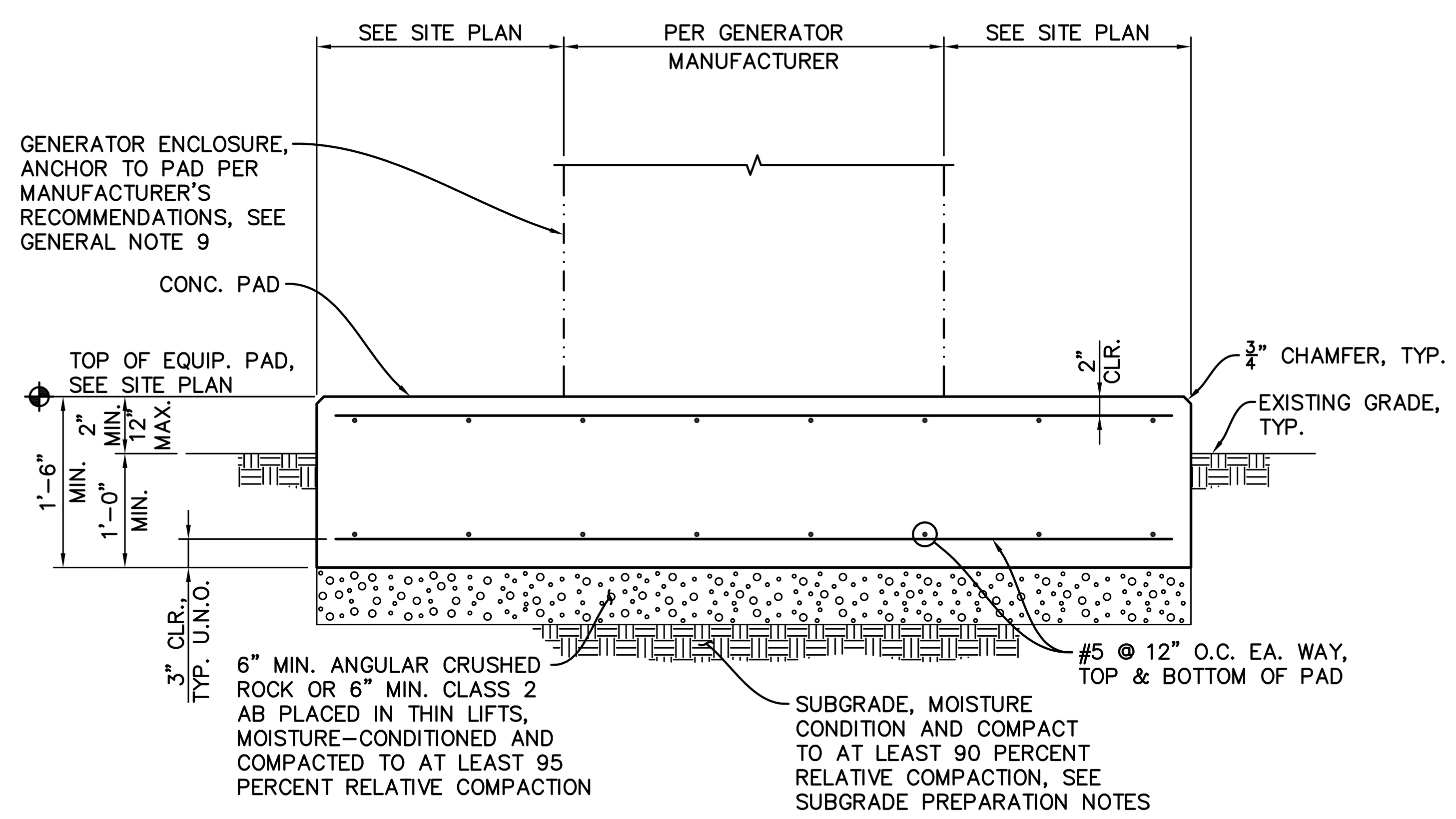

SECTION A/14
3/4" = 1'–0"

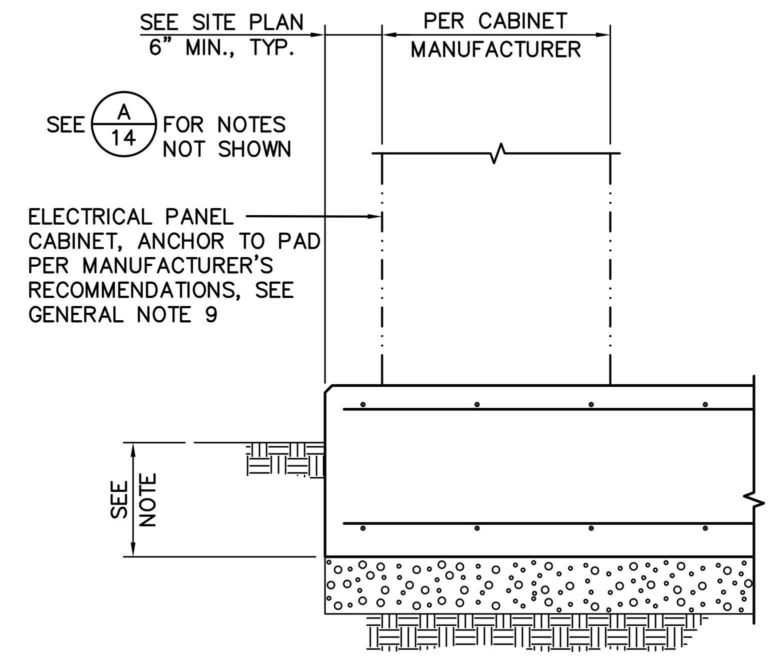

NOTE:
AT COMBINED EQUIPMENT PADS, PAD EMBEDMENT SHALL BE PER A/14. WHEN ELECTRICAL PANEL CABINETS ARE ON SEPARATE PADS, PAD EMBEDMENT MAY BE DECREASED TO 8" MIN.

SECTION B/14
3/4" = 1'–0"

GENERAL NOTES:

1. BASIS OF DESIGN: 2007 CALIFORNIA BUILDING CODE.
2. THESE DRAWINGS SHALL BE USED IN CONJUCTION WITH THE SEPARATELY BOUND PROJECT SPECIFICATIONS.
3. ALL MATERIALS, WORKMANSHIP, TESTING AND INSPECTION SHALL CONFORM TO THE CALIFORNIA BUILDING CODE, 2007 EDITION, AND LOCAL BUILDING CODES.
4. THE CONTRACTOR SHALL VERIFY ALL DIMENSIONS AND EXISTING CONDITIONS ON THE JOBSITE WITH A COMPLETE SET OF THE LATEST DRAWINGS. OMISSIONS OR DISCREPANCIES BETWEEN THE VARIOUS ELEMENTS OF THE CONTRACT DOCUMENTS SHALL BE BROUGHT TO THE ATTENTION OF THE ENGINEER BEFORE PROCEEDING WITH WORK.
5. DETAILS SHOWN ARE TYPICAL, AND APPLY TO SIMILAR CONDITIONS, UNLESS NOTED OTHERWISE.
6. REFER TO SITE PLANS FOR SPECIFIC INFORMATION ON EACH PUMP STATION SITE.
7. THE CONTRACTOR SHALL BE RESPONSIBLE FOR JOBSITE SAFETY, INCLUDING SAFETY OF THE EXISTING STRUCTURES AND UTILITIES. THE CONTRACTOR SHALL PROVIDE ADEQUATE SHORING, BRACING, AND GUYS IN ACCORDANCE WITH ALL NATIONAL, STATE AND LOCAL ORDINANCES.
8. DRAWINGS SHALL NOT BE SCALED OR MEASURED FOR DIMENSIONS.
9. ANCHORAGE OF EQUIPMENT SHALL BE BY THE MANUFACTURER. MANUFACTURER SHALL SUBMIT DRAWINGS AND CALCULATIONS FOR THE EQUIPMENT ANCHORAGE FOR REVIEW AND APPROVAL BY THE ENGINEER PRIOR TO INSTALLATION OF THE EQUIPMENT. SEE PROJECT SPECIFICATIONS FOR SEISMIC DESIGN CRITERIA.
10. EXISTING CONC. PUMP PADS SHALL BE REMOVED PRIOR TO INSTALLATION OF NEW PUMPS. PADS SHALL BE REMOVED FLUSH WITH EXISTING CONC. BASE SLABS WITHOUT DAMAGING BASE SLABS. IF BASE SLABS ARE DAMAGED, BASE SLABS SHALL BE REPAIRED WITH EITHER NON–SHRINK GROUT OR NON–SHRINK EPOXY GROUT. MIN. DEPTH OF REPAIR SHALL BE 1" FOR NON–SHRINK GROUT OR ½" FOR NON–SHRINK EPOXY GROUT. SURFACE PREPARATION, MIXING, APPLICATION, AND CURING OF GROUT SHALL BE IN ACCORDANCE WITH MANUFACTURER'S RECOMMENDATIONS.
11. MATERIAL SPECIFICATIONS:
    A. CONCRETE: MIN. 28 DAY STRENGTH = 4,000 PSI.
    B. REINFORCING STEEL: ASTM A615, GRADE 60.
    C. EPOXY ADHESIVE ANCHOR BOLTS AND DOWELS: SIMPSON STRONG–TIE "SET–XP" EPOXY, HILTI "HIT–RE 500–SD" EPOXY OR APPROVED EQUAL. SEE PROJECT SPECIFICATIONS.
12. DEFERRED SUBMITTALS/SHOP DRAWINGS SHALL BE SUBMITTED FOR THE FOLLOWING ITEMS:
    A. CONCRETE MIX DESIGNS.
    B. BAR REINFORCING STEEL SHOP DRAWINGS.
    C. ANCHORAGE OF EQUIPMENT (DRAWINGS & CALCULATIONS).
13. SPECIAL INSPECTIONS SHALL BE PERFORMED FOR THE FOLLOWING ITEMS:
    A. PLACEMENT OF REINFORCING STEEL.
    B. INSTALLATION OF CAST–IN–PLACE BOLTS AND EMBEDDED ITEMS.
    C. PLACEMENT OF REINFORCED CONCRETE.
    D. INSTALLATION OF POST–INSTALLED ANCHORS.

SUBGRADE PREPARATION NOTES:

1. UPON COMPLETION OF EXCAVATION FOR EQUIPMENT AND ACCESS PADS, ENGINEER SHALL INSPECT THE EXPOSED SUBGRADE MATERIAL. IF THE SUBGRADE MATERIAL IS CLAY, CONTAINS SIGNIFICANT ROOTS, OR APPEARS POTENTIALLY UNSTABLE AS DETERMINED BY THE ENGINEER, OVEREXCAVATE AN ADDITIONAL 6 INCHES AND COMPACT THE EXPOSED SUBGRADE AT THE BOTTOM OF THE OVEREXCAVATION TO AT LEAST 90 PERCENT RELATIVE COMPACTION. SUBGRADE SHALL HAVE A FIRM, UNYIELDING CONDITION UPON COMPLETION OF COMPACTION. IF, IN THE OPINION OF THE ENGINEER, THE OVEREXCAVATED MATERIAL IS SUITABLE FOR USE AS BACKFILL MATERIAL, MOISTURE CONDITION AND RECOMPACT THE OVEREXCAVATED MATERIAL TO AT LEAST 90 PERCENT RELATIVE COMPACTION. IF, IN THE OPINION OF THE ENGINEER, THE OVEREXCAVATED MATERIAL IS NOT SUITABLE FOR USE AS BACKFILL MATERIAL, BACKFILL THE OVEREXCAVATION WITH EITHER ANGULAR CRUSHED ROCK OR CLASS 2 AB PLACED IN THIN LIFTS, MOISTURE–CONDITIONED, AND COMPACTED TO AT LEAST 90 PERCENT RELATIVE COMPACTION.
2. IF THE SUBGRADE MATERIAL AT THE BOTTOM OF THE 6–INCH OVEREXCAVATION STILL CONTAINS SIGNIFICANT ROOTS, APPEARS UNSTABLE, OR IS SIGNIFICANTLY OVER THE OPTIMUM MOISTURE CONTENT AS DETERMINED BY THE ENGINEER, OVEREXCAVATE AN ADDITIONAL 12 INCHES AND COMPACT THE EXPOSED SUBGRADE AT THE BOTTOM OF THE OVEREXCAVATION TO AT LEAST 90 PERCENT RELATIVE COMPACTION. SUBGRADE SHALL HAVE A FIRM, UNYIELDING CONDITION UPON COMPLETION OF COMPACTION. PLACE TC MIRAFI 600X STABILIZATION FABRIC, OR APPROVED EQUAL, IN THE BOTTOM OF THE OVEREXCAVATION. THE FABRIC SHALL EXTEND UP THE SIDE WALLS OF THE OVEREXCAVATION. IF, IN THE OPINION OF THE ENGINEER, THE OVEREXCAVATED MATERIAL IS SUITABLE FOR USE AS BACKFILL MATERIAL, MOISTURE CONDITION AND RECOMPACT THE OVEREXCAVATED MATERIAL TO AT LEAST 90 PERCENT RELATIVE COMPACTION. IF, IN THE OPINION OF THE ENGINEER, THE OVEREXCAVATED MATERIAL IS NOT SUITABLE FOR USE AS BACKFILL MATERIAL, BACKFILL THE OVEREXCAVATION WITH EITHER ANGULAR CRUSHED ROCK OR CLASS 2 AB PLACED IN THIN LIFTS, MOISTURE–CONDITIONED, AND COMPACTED TO AT LEAST 90 PERCENT RELATIVE COMPACTION.
3. COMPACTION SHALL BE PERFORMED WITH A WACKER 'BPU2540A' VIBRATORY PLATE COMPACTOR OR EQUAL. A MINIMUM OF 4 PASSES ACROSS THE SURFACE BEING COMPACTED SHALL BE PERFORMED. ADDITIONAL PASSES MAY BE NECESSARY AS DIRECTED BY THE ENGINEER.
4. ANY NECESSARY OVEREXCAVATION, COMPACTION, AND BACKFILL WILL BE PAID ON A TIME AND MATERIALS BASIS IN ADDITION TO THE BASE BID.

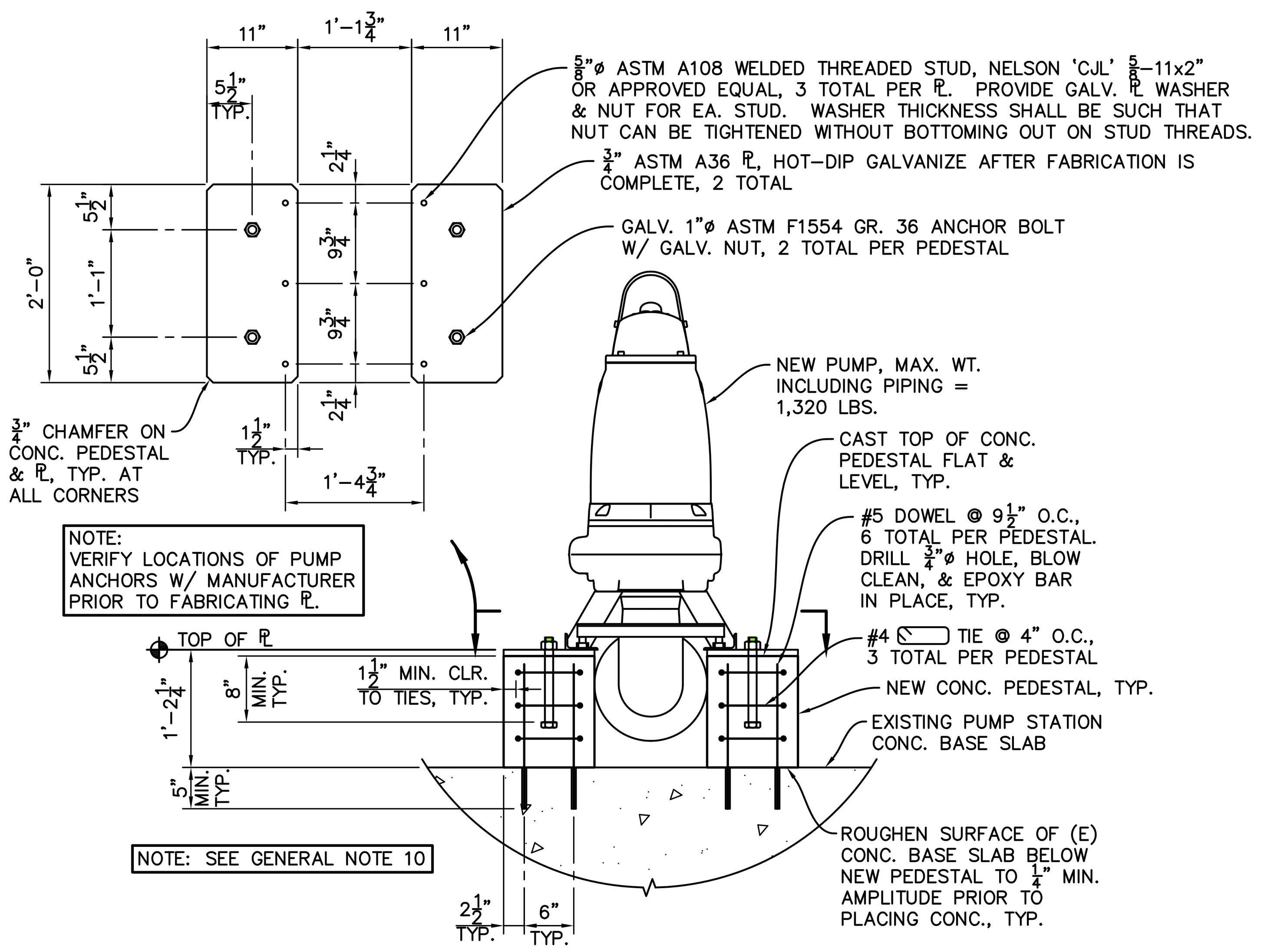

PARK–OTIS PUMP DETAIL

DETAIL 1/14
3/4" = 1'–0"

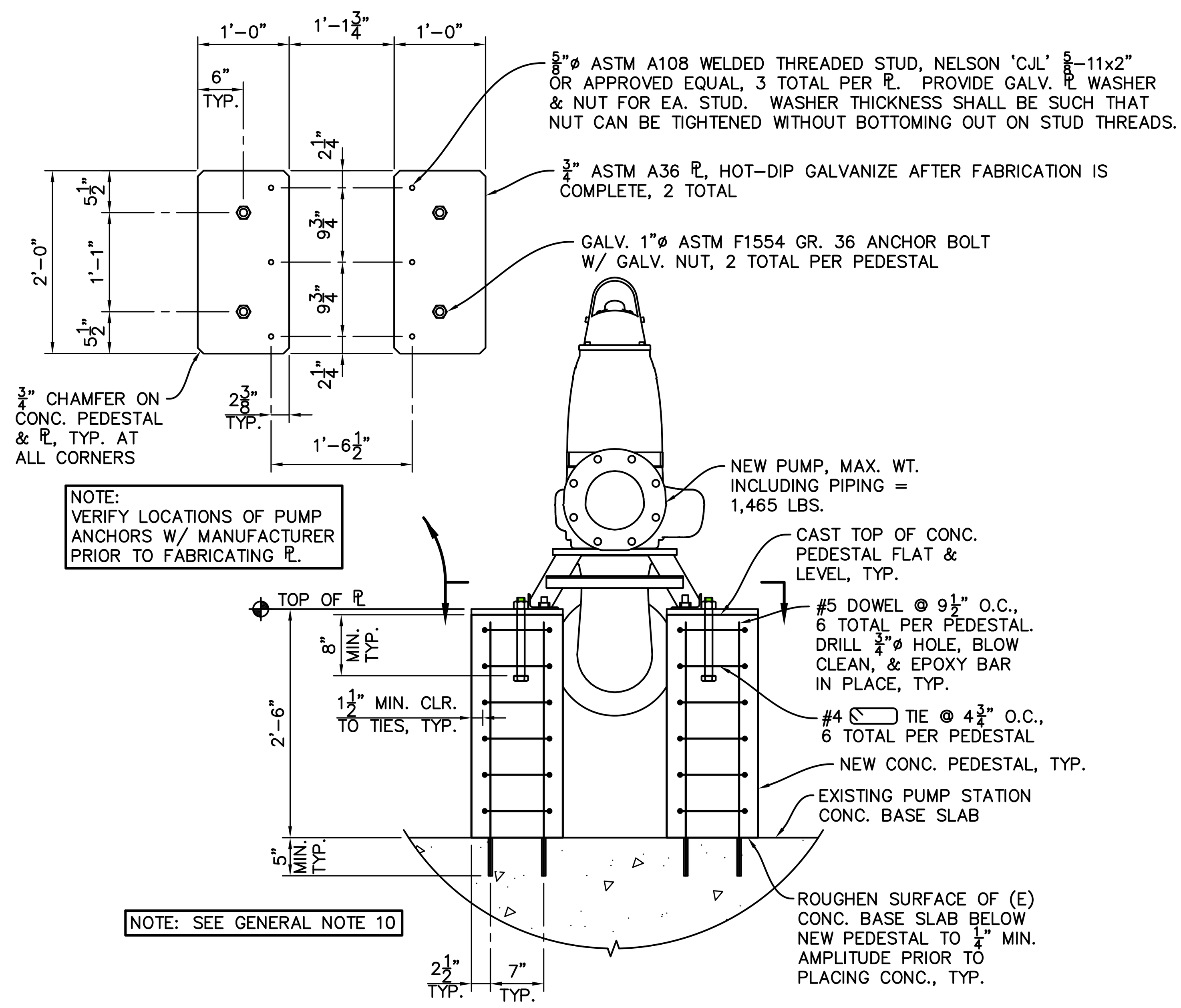

CATALINA PUMP DETAIL

DETAIL 2/14
3/4" = 1'–0"

SEE 7/14 FOR ACCESS PAD JOINTING REQUIREMENTS

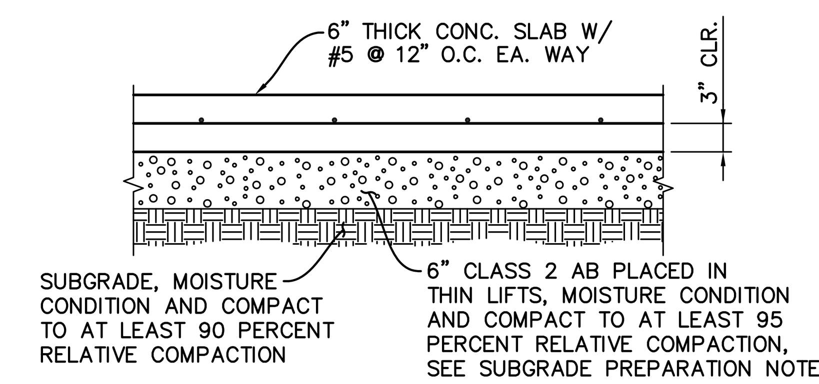

TYPICAL ACCESS PAD SECTION

DETAIL 6/14
3/4" = 1'–0"

NOTES:
1. SAW–CUTTING SHALL BE COMPLETED NO MORE THAN 12 HOURS AFTER PLACING CONCRETE SLAB.
2. JOINTS SHALL BE LOCATED AT 10'–0" O.C. MAX.
3. IN LIEU OF SAW–CUTTING, CONTRACTOR MAY EMBED. A 1½" DEEP ZIP STRIP IN SLAB.

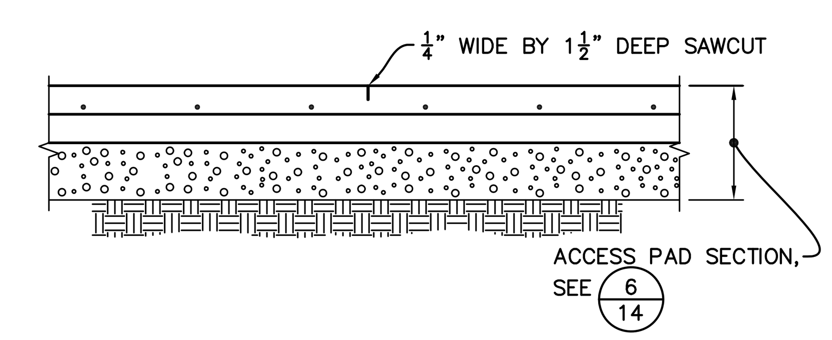

WEAKENED PLANE JOINT

DETAIL 7/14
3/4" = 1'–0"

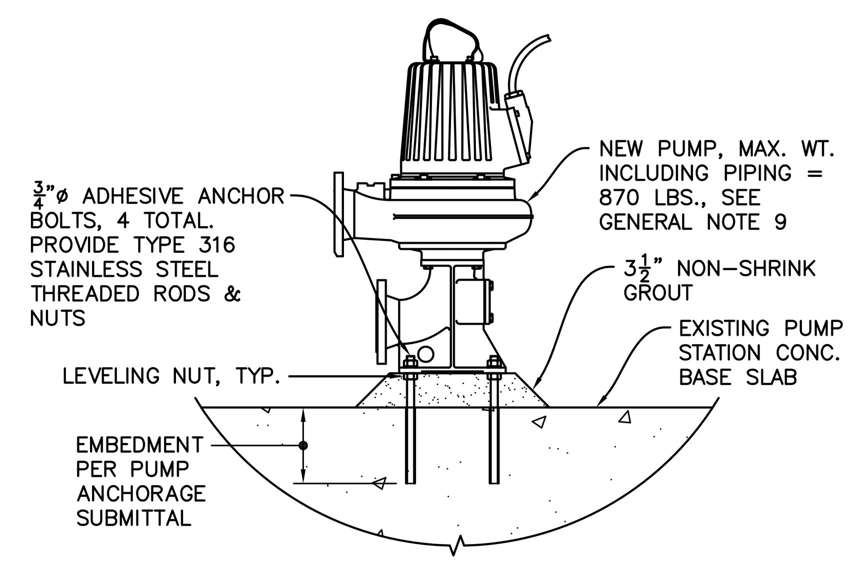

GRAND–OTIS PUMP DETAIL

DETAIL 3/14
3/4" = 1'–0"

NOTES:
1. D = 6d FOR #3 THRU #8
   D = 8d FOR #9 THRU #11
   D = 10d FOR #14 THRU #18
2. ALL BENDS SHALL BE MADE COLD.
3. #14 AND #18 BARS SHALL BE BEND–TESTED AND APPROVED PRIOR TO BENDING.

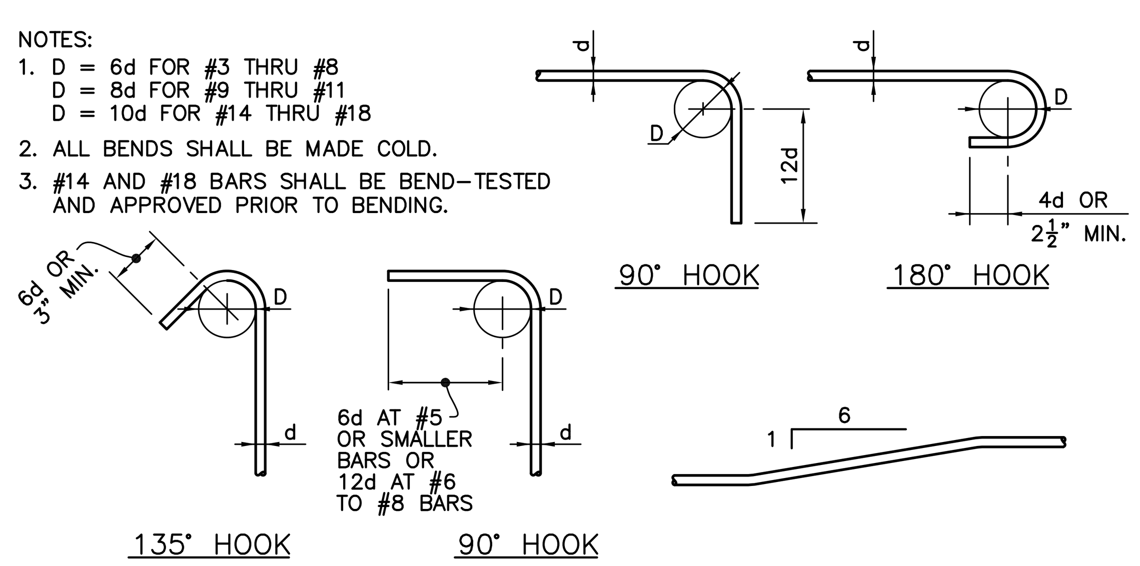

TIE & STIRRUP REINFORCING

PRINCIPLE REINFORCING

DETAIL 4/14
NTS

REINFORCING LAP SPLICES		
CONCRETE STRENGTH	f'_c = 4000 PSI	
BAR SIZE	TOP BARS	OTHER BARS
#3	1'–4"	1'–4"
#4	1'–8"	1'–4"
#5	2'–1"	1'–7"
#6	2'–5"	1'–11"
#7	3'–7"	2'–9"
#8	4'–1"	3'–1"
#9	4'–7"	3'–6"
#10	5'–2"	3'–11"
#11	5'–8"	4'–5"

NOTES:
1. LAP SPLICE LENGTHS SHALL BE INCREASED BY 50% WHERE BAR CLEAR COVER IS LESS THAN 2 BAR DIAMETERS OR WHERE SPACING BETWEEN BARS BEING SPLICED IS LESS THAN 5 BAR DIAMETERS.
2. TOP BARS ARE HORIZONTAL BARS WITH MORE THAN 12 INCHES OF CONCRETE CAST BELOW THE BARS.

DETAIL 5/14
NTS

Finn Design Group, Inc.
Structural Engineers
5000 Hopyard Road, Suite 300
Pleasanton, CA 94588
OFFICE (925) 737–1600
FAX (925) 737–1601

NO	REVISIONS	DATE	APPR
1			
2			
3			
4			
5			
6			
7			

REGISTERED PROFESSIONAL ENGINEER JEFFREY A. FINN C 43928 S 3672 Exp. 6/30/13 CIVIL & STRUCTURAL STATE OF CALIFORNIA

Schaaf & Wheeler
CONSULTING CIVIL ENGINEERS
100 N. WINCHESTER BLVD, STE. 200
SANTA CLARA, CA 95050
(408) 246-4848

CITY OF ALAMEDA
SEWER PUMP STATIONS BACKUP GENERATOR INSTALLATION, PHASE 1
STRUCTURAL DETAILS

DATE: 8/9/11
SCALE: AS SHOWN
DESIGN: TEE
DRAWN: REM
CHECKED: JAF

GENERAL

ALAMEDA MUNICIPAL POWER
A Department of the City of Alameda

Project Requirements Checklist
General Requirements

Questions? Contact the AMP Engineering Department at 510-748-3996, FAX: 510-748-3993

SUMMARY OF GENERAL REQUIREMENTS

Customer/Contractor is responsible for ensuring that final installations meet all City of Alameda and Alameda Municipal Power (AMP) requirements.

☒ 1. To ensure that all substructure contract work is done per AMP standards, AMP will assign an inspector during construction.

☒ 2. The owner/developer's electrical consultant shall coordinate power requirements with AMP. Failure to do so may delay project implementation.

☒ 3. AMP will charge the owner/developer for the actual cost of all expenses associated with the utility duct system engineering design, plan review, and construction inspection. An estimate of this cost for this project is $2,450.00. To initiate a work order, AMP will require a check or a purchase order from the developer/customer.

☐ 4. Per AMP's Rules and Regulations, the owner/developer shall be responsible for 60% of the installed costs of the required primary trunk cables and pad-mounted switches.

☐ 5. AMP will require a Transformer Capacity Utilization Agreement and deposit from the customer when the new service request requires a 750 kVA or larger capacity transformer, prior to purchase of the transformer. The service size indicated will require a _____ kVA transformer and a $ _____.00 deposit. (For projects requiring large transformers and/or switches, developer/customer must allow for a 4 to 6-month leadtime).

☒ 6. Developer's contractor shall obtain an electrical permit from the City's Permit Center. The City of Alameda's Combination Inspector must approve electrical installation before any service will be energized.

☐ 7. Streetlight system on public streets shall be subject to AMP's review and approval. Developer may enter into an agreement with AMP regarding maintenance and future replacement of private streetlights.

☐ 8. AMP is presently the telephone service provider at Alameda Point. Please contact the Telecom Operations Supervisor at (510)-814-5631 for inquiries.

☐ 9. Other Comments:

CATALINA

ALAMEDA MUNICIPAL POWER
A Department of the City of Alameda

Project Requirements Checklist
Service Equipment Requirements

Questions? Contact the AMP Engineering Department at 510-748-3996, FAX: 510-748-3993

SUMMARY OF SERVICE EQUIPMENT REQUIREMENTS

Customer/Contractor is responsible for ensuring that final installations meet all City of Alameda and Alameda Municipal Power (AMP) requirements.

AMP will furnish and install the necessary metering CT's, PT's, and test switch. For service equipment approval, contractor/vendor must comply with all AMP and City of Alameda requirements, including those summarized below. All Service Equipment will have provisions for sealing the Meter per EUSERC requirements.

Customer/Contractor should provide Service Equipment shop drawings to AMP for review, prior to manufacture, to avoid delays due to field modifications. Final Service Equipment Submittals must be provided to, and approved by, the City of Alameda Permit Center and AMP prior to installation and connection to AMP's electrical system.

1. Service Equipment: ☐ Indoor (NEMA 1 or better) ☒ Outdoor (NEMA 3R or better)
2. Service Rating: 200 Amperes 120/208 Volts 3 Phase 4 Wires
3. Bus Bar Dimensions: Phase - 100% Rated; Neutral - 100% Rated.
   (Current density shall be based on 1000 A/sq. inch for copper bus and 750 A/sq. inch for aluminum bus. The minimum required current density shall apply to the main bus upstream of the meter(s) including up to the first disconnect after each meter).
4. Main Disconnect: ☒ Circuit Breaker ☐ Fused Switch
5. Interrupting or Short Circuit Rating: 18,000 Amperes, RMS Sym.
6. CT Compartment (per EUSERC #320 or #322, whichever is applicable)
7. Meter Plate (per EUSERC #332)
8. Pull Section (per EUSERC #345)
9. Line Termination (per EUSERC #347)
10. Copper Ground Bus
11. Factory-installed bolt-type test by-pass/disconnect block (for self contained meters only)
12. Meter Socket with 7 Jaws
13. Remote Metering Required: ☐ Yes; ☒ No

NOTE: Please contact the Electrical Equipment Supervisor, at (510) 814-5692 as soon as the equipment arrives at the job site to schedule the installation of AMP-furnished instrument transformers and other metering devices.

The service equipment will also have to be inspected and approved by the City of Alameda's Electrical Inspector, (510) 747-6830, before it can be energized. **For projects under Federal, State, or County inspection jurisdiction, a City inspection of service equipment up to and including the main disconnect, at a minimum, is required before the service can be energized.**

DUBLIN

ALAMEDA MUNICIPAL POWER
A Department of the City of Alameda

Project Requirements Checklist
Service Equipment Requirements

Questions? Contact the AMP Engineering Department at 510-748-3996, FAX: 510-748-3993

SUMMARY OF SERVICE EQUIPMENT REQUIREMENTS

Customer/Contractor is responsible for ensuring that final installations meet all City of Alameda and Alameda Municipal Power (AMP) requirements.

AMP will furnish and install the necessary metering CT's, PT's, and test switch. For service equipment approval, contractor/vendor must comply with all AMP and City of Alameda requirements, including those summarized below. All Service Equipment will have provisions for sealing the Meter per EUSERC requirements.

Customer/Contractor should provide Service Equipment shop drawings to AMP for review, prior to manufacture, to avoid delays due to field modifications. Final Service Equipment Submittals must be provided to, and approved by, the City of Alameda Permit Center and AMP prior to installation and connection to AMP's electrical system.

1. Service Equipment: ☐ Indoor (NEMA 1 or better) ☒ Outdoor (NEMA 3R or better)
2. Service Rating: 100 Amperes 120/240 Volts 1 Phase 3 Wires
3. Bus Bar Dimensions: Phase - 100% Rated; Neutral - 100% Rated.
   (Current density shall be based on 1000 A/sq. inch for copper bus and 750 A/sq. inch for aluminum bus. The minimum required current density shall apply to the main bus upstream of the meter(s) including up to the first disconnect after each meter).
4. Main Disconnect: ☒ Circuit Breaker ☐ Fused Switch
5. Interrupting or Short Circuit Rating: 14,000 Amperes, RMS Sym.
6. CT Compartment (per EUSERC #320 or #322, whichever is applicable)
7. Meter Plate (per EUSERC #332)
8. Pull Section (per EUSERC #345)
9. Line Termination (per EUSERC #347)
10. Copper Ground Bus
11. Factory-installed bolt-type test by-pass/disconnect block (for self contained meters only)
12. Meter Socket with 4 Jaws
13. Remote Metering Required: ☐ Yes; ☒ No

NOTE: Please contact the Electrical Equipment Supervisor, at (510) 814-5692 as soon as the equipment arrives at the job site to schedule the installation of AMP-furnished instrument transformers and other metering devices.

The service equipment will also have to be inspected and approved by the City of Alameda's Electrical Inspector, (510) 747-6830, before it can be energized. **For projects under Federal, State, or County inspection jurisdiction, a City inspection of service equipment up to and including the main disconnect, at a minimum, is required before the service can be energized.**

GRAND-OTIS

ALAMEDA MUNICIPAL POWER
A Department of the City of Alameda

Project Requirements Checklist
Service Equipment Requirements

Questions? Contact the AMP Engineering Department at 510-748-3996, FAX: 510-748-3993

SUMMARY OF SERVICE EQUIPMENT REQUIREMENTS

Customer/Contractor is responsible for ensuring that final installations meet all City of Alameda and Alameda Municipal Power (AMP) requirements.

AMP will furnish and install the necessary metering CT's, PT's, and test switch. For service equipment approval, contractor/vendor must comply with all AMP and City of Alameda requirements, including those summarized below. All Service Equipment will have provisions for sealing the Meter per EUSERC requirements.

Customer/Contractor should provide Service Equipment shop drawings to AMP for review, prior to manufacture, to avoid delays due to field modifications. Final Service Equipment Submittals must be provided to, and approved by, the City of Alameda Permit Center and AMP prior to installation and connection to AMP's electrical system.

1. Service Equipment: ☐ Indoor (NEMA 1 or better) ☒ Outdoor (NEMA 3R or better)
2. Service Rating: 100 Amperes 120/240 Volts 3 Phase 4 Wires
3. Bus Bar Dimensions: Phase - 100% Rated; Neutral - 100% Rated.
   (Current density shall be based on 1000 A/sq. inch for copper bus and 750 A/sq. inch for aluminum bus. The minimum required current density shall apply to the main bus upstream of the meter(s) including up to the first disconnect after each meter).
4. Main Disconnect: ☒ Circuit Breaker ☐ Fused Switch
5. Interrupting or Short Circuit Rating: 18,000 Amperes, RMS Sym.
6. CT Compartment (per EUSERC #320 or #322, whichever is applicable)
7. Meter Plate (per EUSERC #332)
8. Pull Section (per EUSERC #345)
9. Line Termination (per EUSERC #347)
10. Copper Ground Bus
11. Factory-installed bolt-type test by-pass/disconnect block (for self contained meters only)
12. Meter Socket with 7 Jaws
13. Remote Metering Required: ☐ Yes; ☒ No

NOTE: Please contact the Electrical Equipment Supervisor, at (510) 814-5692 as soon as the equipment arrives at the job site to schedule the installation of AMP-furnished instrument transformers and other metering devices.

The service equipment will also have to be inspected and approved by the City of Alameda's Electrical Inspector, (510) 747-6830, before it can be energized. **For projects under Federal, State, or County inspection jurisdiction, a City inspection of service equipment up to and including the main disconnect, at a minimum, is required before the service can be energized.**

PARK-OTIS

ALAMEDA MUNICIPAL POWER
A Department of the City of Alameda

Project Requirements Checklist
Service Equipment Requirements

Questions? Contact the AMP Engineering Department at 510-748-3996, FAX: 510-748-3993

SUMMARY OF SERVICE EQUIPMENT REQUIREMENTS

Customer/Contractor is responsible for ensuring that final installations meet all City of Alameda and Alameda Municipal Power (AMP) requirements.

AMP will furnish and install the necessary metering CT's, PT's, and test switch. For service equipment approval, contractor/vendor must comply with all AMP and City of Alameda requirements, including those summarized below. All Service Equipment will have provisions for sealing the Meter per EUSERC requirements.

Customer/Contractor should provide Service Equipment shop drawings to AMP for review, prior to manufacture, to avoid delays due to field modifications. Final Service Equipment Submittals must be provided to, and approved by, the City of Alameda Permit Center and AMP prior to installation and connection to AMP's electrical system.

1. Service Equipment: ☐ Indoor (NEMA 1 or better) ☒ Outdoor (NEMA 3R or better)
2. Service Rating: 400 Amperes 120/208 Volts 3 Phase 4 Wires
3. Bus Bar Dimensions: Phase - 100% Rated; Neutral - 100% Rated.
   (Current density shall be based on 1000 A/sq. inch for copper bus and 750 A/sq. inch for aluminum bus. The minimum required current density shall apply to the main bus upstream of the meter(s) including up to the first disconnect after each meter).
4. Main Disconnect: ☒ Circuit Breaker ☐ Fused Switch
5. Interrupting or Short Circuit Rating: 22,000 Amperes, RMS Sym.
6. CT Compartment (per EUSERC #320 or #322, whichever is applicable)
7. Meter Plate (per EUSERC #332)
8. Pull Section (per EUSERC #345)
9. Line Termination (per EUSERC #347)
10. Copper Ground Bus
11. Factory-installed bolt-type test by-pass/disconnect block (for self contained meters only)
12. Meter Socket with 7 Jaws
13. Remote Metering Required: ☐ Yes; ☒ No

NOTE: Please contact the Electrical Equipment Supervisor, at (510) 814-5692 as soon as the equipment arrives at the job site to schedule the installation of AMP-furnished instrument transformers and other metering devices.

The service equipment will also have to be inspected and approved by the City of Alameda's Electrical Inspector, (510) 747-6830, before it can be energized. **For projects under Federal, State, or County inspection jurisdiction, a City inspection of service equipment up to and including the main disconnect, at a minimum, is required before the service can be energized.**

TIDEWAY

ALAMEDA MUNICIPAL POWER
A Department of the City of Alameda

Project Requirements Checklist
Service Equipment Requirements

Questions? Contact the AMP Engineering Department at 510-748-3996, FAX: 510-748-3993

SUMMARY OF SERVICE EQUIPMENT REQUIREMENTS

Customer/Contractor is responsible for ensuring that final installations meet all City of Alameda and Alameda Municipal Power (AMP) requirements.

AMP will furnish and install the necessary metering CT's, PT's, and test switch. For service equipment approval, contractor/vendor must comply with all AMP and City of Alameda requirements, including those summarized below. All Service Equipment will have provisions for sealing the Meter per EUSERC requirements.

Customer/Contractor should provide Service Equipment shop drawings to AMP for review, prior to manufacture, to avoid delays due to field modifications. Final Service Equipment Submittals must be provided to, and approved by, the City of Alameda Permit Center and AMP prior to installation and connection to AMP's electrical system.

1. Service Equipment: ☐ Indoor (NEMA 1 or better) ☒ Outdoor (NEMA 3R or better)
2. Service Rating: 100 Amperes 120/240 Volts 3 Phase 4 Wires
3. Bus Bar Dimensions: Phase - 100% Rated; Neutral - 100% Rated.
   (Current density shall be based on 1000 A/sq. inch for copper bus and 750 A/sq. inch for aluminum bus. The minimum required current density shall apply to the main bus upstream of the meter(s) including up to the first disconnect after each meter).
4. Main Disconnect: ☒ Circuit Breaker ☐ Fused Switch
5. Interrupting or Short Circuit Rating: 18,000 Amperes, RMS Sym.
6. CT Compartment (per EUSERC #320 or #322, whichever is applicable)
7. Meter Plate (per EUSERC #332)
8. Pull Section (per EUSERC #345)
9. Line Termination (per EUSERC #347)
10. Copper Ground Bus
11. Factory-installed bolt-type test by-pass/disconnect block (for self contained meters only)
12. Meter Socket with 7 Jaws
13. Remote Metering Required: ☐ Yes; ☒ No

NOTE: Please contact the Electrical Equipment Supervisor, at (510) 814-5692 as soon as the equipment arrives at the job site to schedule the installation of AMP-furnished instrument transformers and other metering devices.

The service equipment will also have to be inspected and approved by the City of Alameda's Electrical Inspector, (510) 747-6830, before it can be energized. **For projects under Federal, State, or County inspection jurisdiction, a City inspection of service equipment up to and including the main disconnect, at a minimum, is required before the service can be energized.**

SYMBOLS AND ABBREVIATIONS

9 OCT. 03

SYMBOLS & ABBREVIATIONS SHOWN ARE FOR GENERAL USE
DISREGARD THOSE WHICH DO NOT APPEAR ON THE PLANS

LIGHT FIXTURES

- FLUORESCENT - ANY MOUNT
- FLUORESCENT STRIP - ANY MOUNT
- INCAND. OR HID - CEILING RECESSED
- INCAND. OR HID - SURF. OR SUSP.
- INCAND. OR HID - WALL MOUNT
- SITE LIGHT - ARM MOUNTED ON POLE
- SITE LIGHT - GROUND, POST OR POLE MOUNTED
- EXIT LIGHT - ANY MOUNT SEE PLANS FOR MTG.
- EMERGENCY LIGHTING SET

SWITCHES

ALL SWITCHES 20A - 120/277V - U.O.N.
SWITCH MOUNTING = +48" U.O.N.

$	S.P.S.T.
$S	SINGLE LOAD MOTION SENSOR SWITCH
$D	DOUBLE LOAD MOTION SENSOR SWITCH
$3	3 - WAY
$4	4 - WAY
$P	S.P.S.T. WITH PILOT LIGHT
$K	S.P.S.T. KEY OPERATED
$M	MOTOR RATED SWITCH
	INCAND. DIMMER SWITCH SIZE FOR LOAD SERVED U.O.N.
	PUSHBUTTON - SEE DWGS FOR TYPES
	OCCUPANCY SENSOR - CEILING MOUNTED
	OCCUPANCY SENSOR - WALL MOUNTED
	EMERGENCY DISCONNECT PUSHBUTTON

OUTLETS

ALL RECEPTACLE OUTLETS 20A - 125V. - U.O.N.
OUTLET MOUNTING = +18" U.O.N.

- SINGLE RECEPTACLE - WALL MOUNT
- DUPLEX RECEPTACLE - WALL MOUNT
- 4-PLEX RECEPTACLE - WALL MOUNT
- DUPLEX RECEPTACLE-MOUNTED ABOVE COUNTER (VERIFY HEIGHT)
- SINGLE ISO. GND. RECEPT. - WALL MOUNT
- DUPLEX ISO. GND. RECEPT. - WALL MOUNT
- (H) HAZARDOUS LOCATION RECEPTACLE WITH MATCHING PLUG, CLASS I, DIVISION 2 SURFACE MOUNT 36"AFF
- (GFI) DUPLEX RECEPTACLE - WITH GROUND FAULT INTERRUPTER
- POWER OUTLET - SEE DWGS FOR THIS TYPES
- CLOCK OUTLET - 15A-125V @ +90" U.O.N.
- COMPUTER DATA OUTLET-WALL MOUNT
- TELE/DATA COMBO. OUTLET-WALL MOUNT
- TELEPHONE OUTLET-WALL MOUNT
- TV OUTLET - WALL MOUNT
- FLOOR RECEPTACLE - 20A
- FLOOR COMPUTER DATA OUTLET
- FLOOR TELEPHONE OUTLET
- FLOOR TV OUTLET
- (T) THERMOSTAT OUTLET BOX @ +48" U.O.N.
- (J) JUNCTION BOX - WALL MOUNT
- (J) JUNCTION BOX - CEILING MOUNT
- (S) SPEAKER - WALL MOUNT
- (S) SPEAKER - CEILING MOUNT
- (I) INTRUSION DETECTOR

FIRE ALARM

H	HEAT DETECTOR
TS	TAMPER SWITCH
S	SMOKE DETECTOR
FS	SPRINKLER RISER FLOW SWITCH
FSD	FIRE SMOKE DAMPER
A	*VOICE ANNUNCIATOR/STROBE-WALL MOUNT
	*HORN/STROBE-ANY MOUNT-ANY TYPE
S	*STROBE ONLY - ANY MOUNT
	*HORN-ANY MOUNT-ANY TYPE
	MANUAL PULL STATION @ +48" U.O.N.
	ALARM BELL

*+80"A.F.F. TO BOTTOM OF DEVICE OR 6" BELOW CEILING WHICHEVER IS LOWER

CONDUIT/WIRING

- CONCEALED IN WALLS OR CEILING; OR EXPOSED WHEN SPECIFICALLY NOTED
- UNDER FLOOR SLABS OR UNDERGROUND
- HOMERUN TO PANEL, TERMINAL OR EQUIPMENT INDICATED
- DENOTES NEUT. WIRE
- DENOTES PHASE WIRES
- BRANCH CIRCUIT WIRING ID.
- CONDUIT STUB-OUT
- CONDUIT UP OR DOWN-AS NOTED

—T—	TELEPHONE SYSTEM
—TV—	TELEVISION SYSTEM
—FA—	FIRE ALARM SYSTEM
—EM—	EMERGENCY SYSTEM
—G—	GROUND SYSTEM
—C—	COMPUTER SYSTEM
	EXISTING CONDUIT/WIRING
	INDICATES (E) TO BE REMOVED

MISCELLANEOUS

M	METER
G	GENERATOR WITH MAIN CIRCUIT BREAKER
	MOTOR CONNECTION
	FUSED DISCONNECT SWITCH-FUSED WITH DUAL-ELEMENT TIME DELAY FUSES, SIZED PER EQUIP. MFGR'S NAME PLATE DATA
	DISCONNECT SWITCH-NONFUSED U.O.N.
	MAGNETIC MOTOR STARTER
	COMBINATION MAG STARTER & FUSED DISCONNECT SWITCH
S S	ELECTRONIC REDUCED VOLTAGE STARTER (SOFT START)
	GROUND ROD-DIRECT BURIED
	GROUND ROD-WITH ACCESSIBLE BOX
	FEEDER TAG
	EQUIP. ID TAG-SEE SHEET NOTES ON SAME SHEET WHERE SYMBOL APPEARS U.O.N.
	SHEET NOTE TAG
	TRANSFORMER PAD MOUNT OR DRY TYPE
	SWITCHGEAR OR MCC
	PANELBOARD - FLUSH MOUNTED
	PANELBOARD - SURFACE MOUNTED
	SPECIAL PURPOSE EQUIP., DEVICE, PANEL OR TERMINAL CABINET (F.A., LIGHTING CONTROL, ETC.) EQUIPMENT PARAMETERS INDICATED ON PLANS
	CONCRETE PULLBOX SIZE INDICATED ON PLANS
+48"	INDICATES MOUNTING HEIGHT TO CENTER OF DEVICE OR EQUIP. ABOVE FINISHED FLOOR.
O_b $\$_b$	SUBSCRIPT LETTER INDICATES CONTROL
$_3$ O_2	FIGURE INDICATES BRANCH CIRCUIT NUMBER

ABBREVIATIONS

AFG	ABOVE FINISHED GRADE	(N)	NEW
AFF	ABOVE FINISHED FLOOR	N.C.	NORMALLY CLOSED
AMP	ALAMEDA MUNICIPAL POWER	NIC	NOT IN CONTRACT
ATS	AUTOMATIC TRANSFER SWITCH	NL	NIGHT LIGHT
ARCH.	ARCHITECT	N.O.	NORMALLY OPENED
B.C.	BARE COPPER	OFCI	OWNER FURNISHED CONTRACTOR INSTALLED EQUIPMENT
C.	CONDUIT	PH.	PHASE
CB	CIRCUIT BREAKER	P.O.C.	POINT OF CONNECTION
CEC	CALIFORNIA ELECTRICAL CODE EDITION SPECIFIED OR LATEST ADOPTED EDITION	P/O	PART OF
CKT	CIRCUIT	PPX	POWER PEDESTAL NAME "X" IS DISTINGUISHING NUMBER
C.O.	CONDUIT ONLY	SW	SWITCH
CONC.	CONCRETE	SWBD	SWITCHBOARD
CONTR.	CONTRACTOR	T.,TELE.	TELEPHONE
DISC.	DISCONNECT	TERM.	TERMINAL
(E)	EXISTING	TSP	TWISTED SHIELDED PAIR
ELEC.	ELECTRICAL	TV	TELEVISION
EM	EMERGENCY	UG	UNDERGROUND
(F)	FUTURE	U.O.N.	UNLESS OTHERWISE NOTED
F.A.	FIRE ALARM	WP	WEATHERPROOF
G, GND.	GROUND (ELEC)	XFMR	TRANSFORMER
GFI	GROUND FAULT INTERRUPT		
GRS	GALVANIZED RIGID STEEL		
HOA	HAND-OFF-AUTO SWITCH		
ISO GND.	ISOLATED GND.		
LT. SW.	LIGHT SWITCH		
LV	LOW VOLTAGE (600V & BELOW)		
MECH.	MECHANICAL		
MCP	MOTOR CIRCUIT PROTECTOR		
MSB	MAINSWITCH GEAR		

NO	DATE	REVISIONS	APPR
1			
2			
3			
4			
5			
6			
7			

REGISTERED PROFESSIONAL ENGINEER
THOMAS E. PINKERTON
No. 014906
EXP. 30 JUNE 13
ELECTRICAL
STATE OF CALIFORNIA

FEHR ENGINEERING COMPANY, INC.
62-A HANGAR WAY
WATSONVILLE, CALIFORNIA, 95076
PHONE: (831) 786-0373
FAX: (831) 786-8523
EMAIL: FEC@FEHRINC.COM
CONSULTING ELECTRICAL ENGINEERS
FE JOB No. 10051.01

CITY OF ALAMEDA
SEWER PUMP STATIONS BACKUP GENERATOR INSTALLATION, PHASE 1
ELECTRICAL
SYMBOLS & ABBREVIATIONS

DATE: 8/10/11
SCALE: AS SHOWN
DESIGN: C.L.
DRAWN: C.L.
CHECKED: T.P.

E1.0

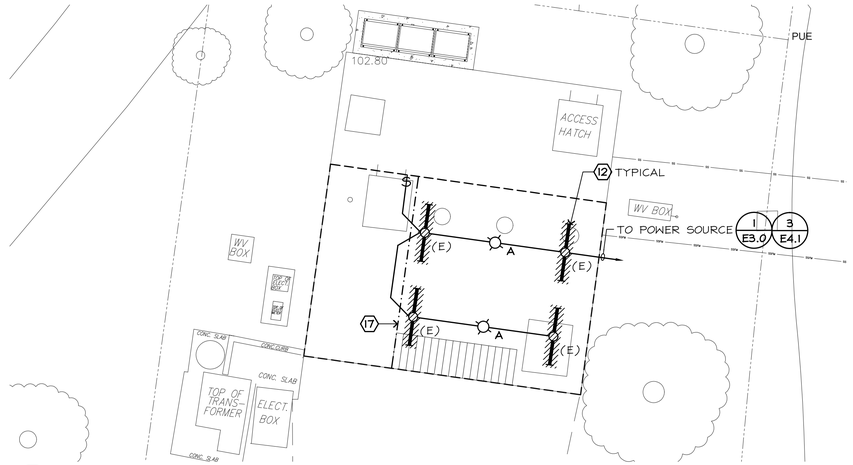

3 LIGHTING PLAN

1"=5'-0"

5' 2.5' 0 5' 10'
1"=5'-0"

NORTH

1 CATALINA PUMP STATION SITE PLAN

1"=5'-0"

5' 2.5' 0 5' 10'
1"=5'-0"

NORTH

DETAIL NOTES:

1. SECTION HEATER; 250W MINIMUM 120V; PROVIDE SINGLE THERMOSTAT CONTROL CENTRALLY LOCATED IN PEDESTAL.
2. PUMP CONTROL; SEE ELECTRICAL SPECIFICATION AND DETAILS **1/E5.0** & **3/E5.0**.
3. METAL BACK PAN 16" X 24". FOR CITY PROVIDED & INSTALLED SCADA EQUIPMENT.
4. PUMP STARTER; SEE SINGLE LINE DIAGRAM.
5. MAINTENANCE DUPLEX RECEPTACLE.
6. ALIGN (N) PEDESTAL TOP ELEVATION WITH (E) STATION TOP ELEVATION.
7. BRANCH CIRCUIT BREAKERS; SEE DETAIL **1/E3.0**.
8. 6" (MINIMUM) FROM EDGE OF EQUIPMENT TO EDGE OF CONCRETE.
9. SEE PLAN FOR ANTENNA MAST LOCATION.
10. PROVIDE INTRUSION ALARM DEVICE AT EACH PEDESTAL DOOR; CLEARWATER TECH 2500 SERIES MAGNETIC POSITION SENSOR OR APPROVED EQUAL; PROVIDE APPROPRIATE MOUNTING HARDWARE FOR EACH DOOR TYPE; SEE CONTROL DIAGRAM AND MAKE APPROPRIATE CONNECTION VIA 2#14.

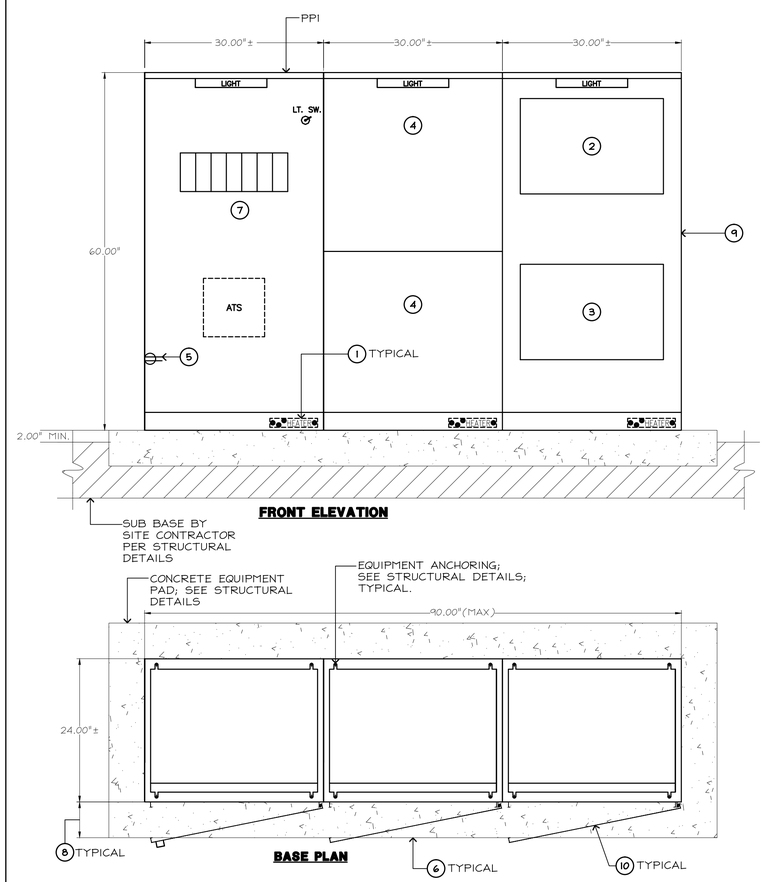

2 PEDESTAL ELEVATION (PP1)

NO SCALE

SHEET NOTES

1. (E) LIFT STATION SERVICE PEDESTAL; ELECTRICAL CONTRACTOR SHALL REUSE (E) SERVICE PEDESTAL; DISCONNECT & REMOVE (E) CONDUCTOR INTO PEDESTAL AND RECONNECT AS INDICATED; SEE DETAIL **1/E3.0**; PROVIDE N.O. INTRUSION ALARM CONTACT FOR SERVICE PEDESTAL DOOR.
2. CONTRACTOR SHALL DISCONNECT & REMOVE ALL (E) ELECTRICAL EQUIPMENT IN DRY WELL (INCLUDING LIGHTS, RECEPTACLES, EQUIPMENT, ETC.).
3. CONCRETE PULLBOX; 17" X 10" I.D.; WITH TRAFFIC RATED LID; LABEL LID "SIGNAL".
4. CONCRETE PADS FOR ELECTRICAL EQUIPMENT PROVIDED & INSTALLED UNDER CIVIL PLANS; COORDINATE ELECTRICAL INSTALLATION WITH CIVIL PLANS.
5. CONCRETE PULLBOX; 22" X 12" I.D.; WITH TRAFFIC RATED LID; LABEL LID "ELECTRICAL". SEE DETAIL **2/E4.1**.
6. DISCONNECT & REMOVE (E) STATION FEEDER; REMOVE (E) CONDUCTORS AND SEAL CONDUIT AT BOTH ENDS TO PREVENT DRYWELL GAS INFILTRATION INTO PEDESTAL; RECONNECT AS INDICATED; SEE DETAIL **1/E3.0**.
7. CONCRETE PULLBOX; 22"X12" I.D.; WITH TRAFFIC RATED LID; LABEL LID "ELECTRICAL"; SEE DETAIL **5/E4.0**.
8. PRESSURE TRANSDUCER FOR WATER LEVEL DETECTION; CABLE MOUNTED SIMILAR TO DETAIL **4/E4.0**; PROVIDE PRESSURE TRANSDUCER; INTRINSICALLY SAFE; POLYURETHANE MOLDED VENTED WITH KEVLAR CABLE, 4 CONDUCTORS; STAINLESS STEEL 316L HOUSING; 4-20mA SIGNAL; PROVIDE WITH SINK WEIGHTS; PROCESS MEASUREMENT & CONTROLS INC. "VERSALINE VL 2000" SERIES.
9. DRYWELL FLOAT SWITCH; LOCATED AT BOTTOM OF DRYWELL SEE DETAIL **1/E4.2**.
10. DRYWELL POWER DISTRIBUTION; SEE DETAIL **3/E4.1**.
11. (E)DRYWELL IS APPROXIMATELY 20' DEEP WITH AREA (DASHED LINE) AS INDICATED; SEE CIVIL PLANS.
12. REMOVE (E) CEILING MOUNTED LIGHT FIXTURES; REPLACE (E) WITH (N) TYPE "A" FIXTURES. SEE LIGHT FIXTURE SCHEDULE SHEET **E4.2**.
13. WHERE (E) GRS CONDUIT MEETS THE REQUIREMENTS OF THE SPECIFICATION AND ELECTRICAL CODE, (E) GRS CONDUIT MAY BE RE-USED.
14. REMOVE (E) ANTENNA MAST MOUNTED AT APPROXIMATELY 20'; SALVAGE (E) ANTENNA & CONDUCTOR FOR REINSTALLATION IN (N) WORK; PATCH DRYWELL PENETRATION(S) THROUGH CONCRETE USING HIGH STRENGTH (4000 PSI MINIMUM) NON-SHRINK GROUT; COORDINATE WORK WITH CITY.
15. DISCONNECT AND REMOVE (E) POWER & CONTROLS TO VENT MOTOR.
16. SUMP PUMP CORD & PLUG CONNECTED; INSTALL HAZARDOUS LOCATION PLUG ON (E) SUMP PUMP CORD; LOCATE RECEPTACLE TO CONNECT SUMP PUMP.
17. PERIMETER OF EQUIPMENT LANDING LEVEL (12'± ABOVE DRYWELL FLOOR).
18. LOCATED ON EQUIPMENT LANDING LEVEL.
19. DRYWELL SIGNAL DISTRIBUTION. SEE DETAIL **1/E4.2**.
20. INTRUSION ALARM DEVICE CLEARWATER TECH 2500 SERIES MAGNETIC POSITION SENSOR OR APPROVED EQUAL; PROVIDE APPROPRIATE MOUNTING HARDWARE FOR EACH DOOR TYPE; SEE CONTROL DIAGRAM; DEVICES CONNECTED VIA 1/2"C., 2#14 AND FEEDER AS INDICATED TO CONTROL SECTION OF MSB WHERE APPLICABLE.
21. FLOAT SWITCH FOR WATER LEVEL DETECTION; CABLE MOUNTED SIMILAR TO **4/E4.0**. SEE ELECTRICAL SPECIFICATION.
22. PUMP RECEPTACLE; SEE DETAIL **5/E4.0**.
23. PROVIDE WEATHERPROOF ENCLOSURE FOR GENERATOR; SEE ELECTRICAL SPECIFICATION.

NO	REVISIONS	DATE	APPR
1			
2			
3			
4			
5			
6			
7			

REGISTERED PROFESSIONAL ENGINEER
THOMAS E. PINKERTON
No. 014906
Exp. 30 JUNE 13
ELECTRICAL
STATE OF CALIFORNIA

FEHR ENGINEERING COMPANY, INC.
647-A HANGAR WAY
WATSONVILLE, CALIFORNIA 95076
PHONE: (831) 786-0373
FAX: (831) 786-8523
EMAIL: FEHR@FEHRENGCO.COM
CONSULTING ELECTRICAL ENGINEERS
FE JOB No. 1005.01

CITY OF ALAMEDA
SEWER PUMP STATIONS BACKUP GENERATOR INSTALLATION, PHASE 1
ELECTRICAL SITE PLAN

DATE:	8/10/11
SCALE:	AS SHOWN
DESIGN:	C.L.
DRAWN:	C.L.
CHECKED:	T.P.

E2.0

⬡ SHEET NOTES

1. (E) 70/2 SERVICE DISCONNECT MOUNTED TO (E) STRUT FRAMING ABOVE PUMP CONTROL PANEL; ELECTRICAL CONTRACTOR SHALL REMOVE (E) SERVICE AND PUMP CONTROL PANEL.
2. CONCRETE PULLBOX; 13" X 24" I.D.; LABEL LID "ELECTRICAL"; SEE DETAIL **4/E4.0**.
3. POINT OF SERVICE CONNECTION; CONTACT CAROLE McMAHON @ (510)-715-7280 FOR ACCESS TO UTILITY JUNCTION BOX & FOR FINAL FEEDER CONNECTION. PROVIDE 6' CONDUCTOR PIGTAIL FOR SERVICE CONNECTION BY UTILITY.
4. ARRANGE SERVICE CONDUIT INSTALLATION TO MAINTAIN 360° OR LESS IN CONDUIT BENDS; BENDS SHALL BE WIDE RADIUS BENDS & SHALL HAVE MINIMUM BENDING RADIUS AS NOTED IN CEC FOR CONDUIT TYPE.
5. (E) 1 1/2"C., WITH ANTENNA CABLE TO ANTENNA POLE; REMOVE (E) CONDUIT TO ACCOMMODATE (N) INSTALLATION.
6. CONCRETE PULLBOX; 17" X 10" I.D.; LABEL LID "SIGNAL".
7. (E) ANTENNA CIRCUIT; PULL (E) ANTENNA CABLE BACK TO REUSE FOR (N) WORK; (E) CABLE IS INTACT & FUNCTIONAL; CONTRACTOR IS RESPONSIBLE FOR RE-INSTALLATION AND SATISFACTORY FUNCTIONAL TESTING OF CABLE; CONTRACTOR SHALL REPLACE CABLE IN KIND IF CABLE FAILS FUNCTIONAL TESTING AFTER RE-INSTALLATION.
8. INTERCEPT (E) ANTENNA CONDUIT AT CONVENIENT LOCATION AND INSTALL (N) 17" X 10" CONCRETE PULLBOX; SEE DETAIL **2/E4.1**; LABEL LID "SIGNAL".
9. (E) 30' TALL STREET LIGHT WITH SCADA ANTENNA MOUNTED AT TOP OF POLE; POLE IS LOCATED AT STREET CURB.
10. FLOAT SWITCH FOR WATER LEVEL DETECTION; CABLE MOUNTED SIMILAR TO **4/E4.0**. SEE ELECTRICAL SPECIFICATION.
11. PRESSURE TRANSDUCER FOR WATER LEVEL DETECTION; CABLE MOUNTED SIMILAR TO DETAIL **4/E4.0**; PROVIDE PRESSURE TRANSDUCER; INTRINSICALLY SAFE; POLYURETHANE MOLDED VENTED WITH KEVLAR CABLE, 4 CONDUCTORS; STAINLESS STEEL 316L HOUSING; 4-20mA SIGNAL; PROVIDE WITH SINK WEIGHTS; PROCESS MEASUREMENT & CONTROLS INC. "VERSALINE VL 2000" SERIES.
12. PROVIDE WEATHERPROOF SOUND ENCLOSURE FOR GENERATOR; WITH SOUND OUTPUT NOT EXCEEDING 72dbA; SEE ELECTRICAL SPECIFICATION.

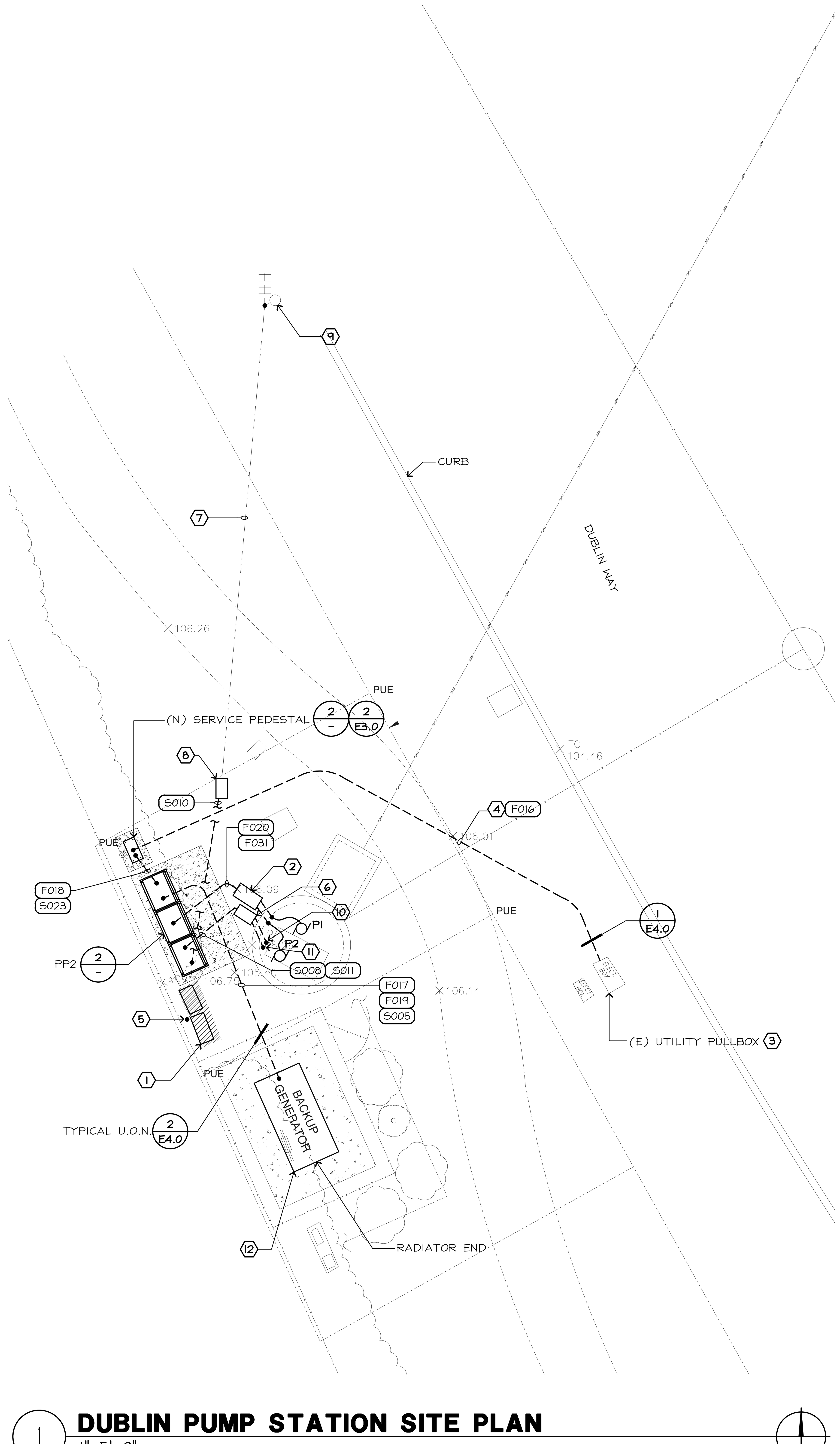

1 DUBLIN PUMP STATION SITE PLAN
1"=5'-0"

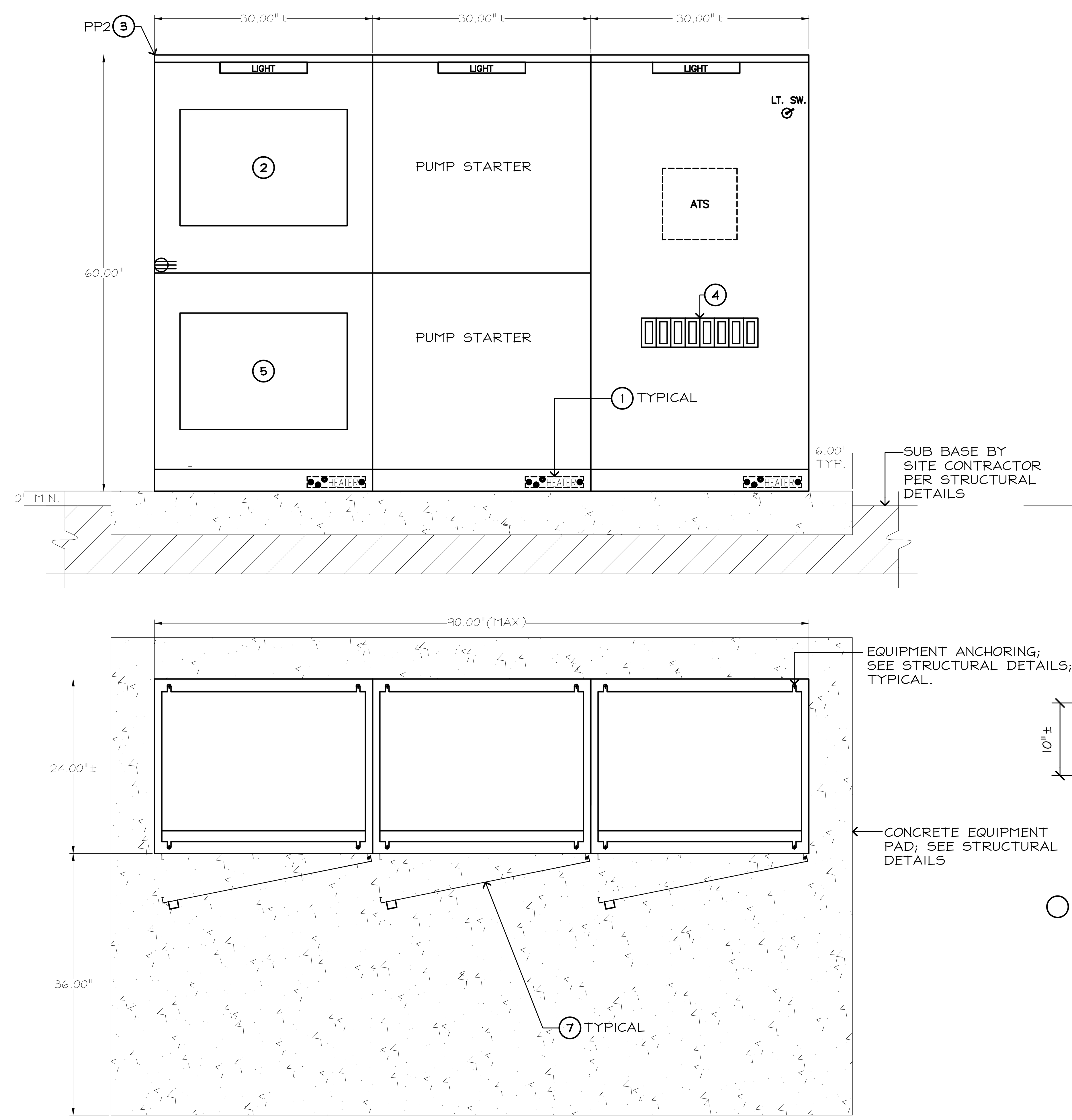

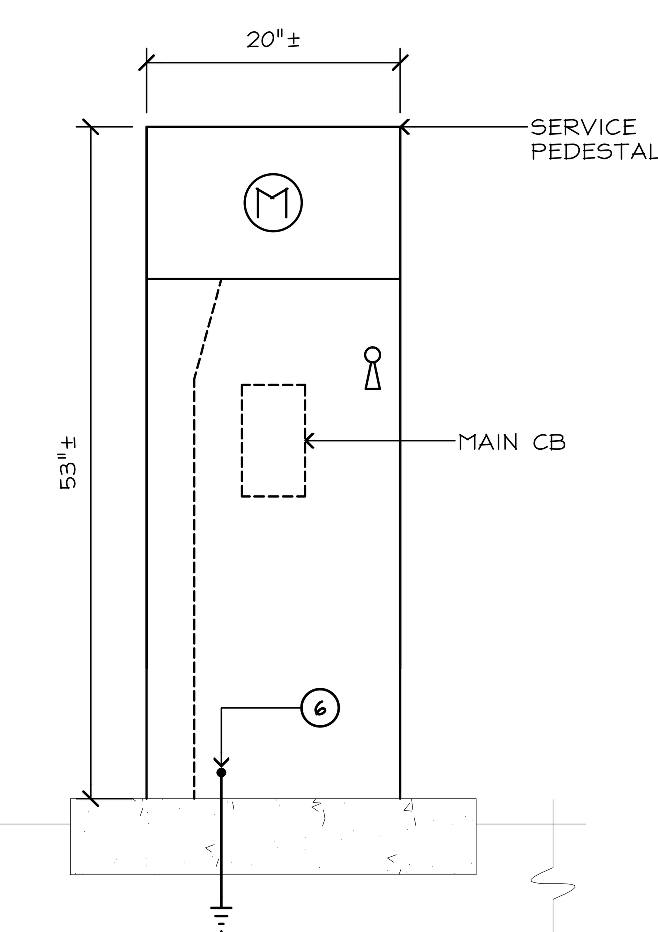

FRONT ELEVATION

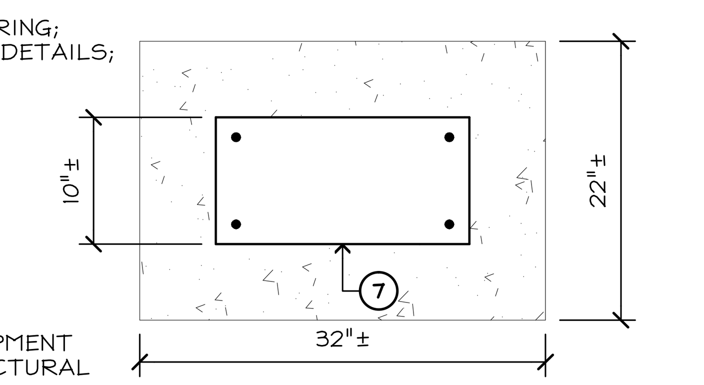

BASE PLAN

○ DETAIL NOTES:

1. SECTION HEATER; 250W MINIMUM 120V; PROVIDE SINGLE THERMOSTAT CONTROL CENTRALLY LOCATED IN PEDESTAL.
2. PUMP CONTROL; SEE ELECTRICAL SPECIFICATION AND DETAILS **1/E5.0 & 3/E5.0**.
3. PUMP CONTROL PEDESTAL; SEE ELECTRICAL SPECIFICATION AND DETAIL **2/E3.0**.
4. CIRCUIT BREAKERS; SEE DETAIL **2/E3.0**.
5. METAL BACK PAN 16" X 24"; FOR CITY PROVIDED & INSTALLED SCADA EQUIPMENT.
6. GROUND ROD; SEE ELECTRICAL SPECIFICATION AND SITE SINGLE LINE DIAGRAM.
7. PROVIDE INTRUSION ALARM DEVICE AT EACH PEDESTAL DOOR; CLEARWATER TECH 2500 SERIES MAGNETIC POSITION SNESOR OR APPROVED EQUAL; PROVIDE APPROPRIATE MOUNTING HARDWARE FOR EACH DOOR TYPE; SEE CONTROL DIAGRAM AND MAKE APPROPRIATE CONNECTION VIA 2#14.

2 PEDESTAL ELEVATION
NO SCALE

NO	REVISIONS	DATE	APPR
1			
2			
3			
4			
5			
6			

REGISTERED PROFESSIONAL ENGINEER — THOMAS E. PINKERTON — 014906 — EXP. 30 JUNE — ELECTRICAL — STATE OF CALIFORNIA

FEHR ENGINEERING COMPANY, INC.
62-A HANGAR WAY
WATSONVILLE, CALIFORNIA 95076
PHONE: (831) 786-0373
FAX: (831) 786-8523
EMAIL: FEC@FEHRINC.COM
CONSULTING ELECTRICAL ENGINEERS
FE JOB No. 10051.01

CITY OF ALAMEDA
SEWER PUMP STATIONS BACKUP GENERATOR INSTALLATION, PHASE 1
ELECTRICAL SITE PLAN

DATE:	8/10/11
SCALE:	AS SHOWN
DESIGN:	C.L.
DRAWN:	C.L.
CHECKED:	T.P.

E2.1

SHEET NOTES

1. (E) LIFT STATION SERVICE PEDESTAL; ELECTRICAL CONTRACTOR SHALL COORDINATE WITH UTILITY TO REMOVE (E) SERVICE AND INSTALL (N) SERVICE; SEE DETAIL **3/E3.0**.
2. POINT OF SERVICE CONNECTION; CONTACT CAROLE McMAHON @ (510)-715-7280 FOR ACCESS TO BOX UTILITY JUNCTION BOX & FOR FINAL FEEDER CONNECTION. PROVIDE 6' CONDUCTOR PIGTAIL FOR SERVICE CONNECTION BY UTILITY.
3. APPROXIMATE LOCATION OF (E) MSB IN DRYWELL BELOW; ELECTRICAL CONTRACTOR SHALL DISCONNECT & REMOVE.
4. ARRANGE SERVICE CONDUIT INSTALLATION TO MAINTAIN 360° OR LESS IN CONDUIT BENDS; BENDS SHALL BE WIDE RADIUS BENDS & SHALL HAVE MINIMUM BENDING RADIUS AS NOTED IN CEC FOR CONDUIT TYPE.
5. WHERE (E) GRS CONDUIT MEETS THE REQUIREMENTS OF THE SPECIFICATION AND ELECTRICAL CODE, (E) GRS CONDUIT MAY BE RE-USED.
6. CONTRACTOR SHALL DISCONNECT & REMOVE ALL (E) ELECTRICAL EQUIPMENT IN DRY WELL (INCLUDING LIGHTS, RECEPTACLES, EQUIPMENT, ETC.).
7. PUMP RECEPTACLE; SEE DETAIL **5/E4.0**.
8. (E) INCANDESCENT LIGHT FIXTURE TO REMAIN; CLEAN FIXTURE & RELAMP WITH 150W BULB; RECIRCUIT AS INDICATED.
9. DRYWELL IS APPROXIMATELY 20' DEEP WITH AREA AS INDICATED (DASHED LINE); SEE CIVIL PLANS.
10. SUMP PUMP CORD & PLUG CONNECTED; INSTALL HAZARDOUS LOCATION PLUG ON (E) SUMP PUMP CORD TO MATCH RECEPTACLE; LOCATE RECEPTACLE TO CONNECT SUMP PUMP.
11. DISCONNECT AND REMOVE (E) POWER & CONTROLS TO VENT MOTOR.
12. REMOVE (E) ANTENNA MAST MOUNTED AT APPROXIMATELY 20'; SALVAGE (E) ANTENNA & CONDUCTOR FOR REINSTALLATION IN (N) WORK; PATCH DRYWELL PENETRATION(S) THROUGH CONCRETE USING HIGH STRENGTH (4000 PSI MINIMUM) NON-SHRINK GROUT; COORDINATE WORK WITH CITY.
13. CONCRETE PULLBOX; 17" X 10" I.D.; WITH TRAFFIC RATED LID; LABEL LID "SIGNAL".
14. DRYWELL POWER DISTRIBUTION; SEE DETAIL **3/E4.1**.
15. DRYWELL SIGNAL DISTRIBUTION. SEE DETAIL **1/E4.2**.
16. LOCATION OF (N) RECEPTACLE COINCIDES WITH (E); REMOVE (E) RECEPTACLE & REPLACE WITH (N).
17. INTRUSION ALARM DEVICE; CLEARWATER TECH 2500 SERIES MAGNETIC POSITION SENSOR OR APPROVED EQUAL; PROVIDE APPROPRIATE MOUNTING HARDWARE FOR EACH DOOR TYPE; SEE CONTROL DIAGRAM; DEVICES CONNECTED VIA 1/2"C, 2#14 AND FEEDER AS INDICATED TO CONTROL SECTION OF MSB WHERE APPLICABLE.
18. CONCRETE PULLBOX; 22"X12" I.D.; WITH TRAFFIC RATED LID; LABEL LID "ELECTRICAL"; SEE DETAIL **5/E4.0**.
19. FLOAT SWITCH FOR WATER LEVEL DETECTION; CABLE MOUNTED SIMILAR TO **4/E4.0**. SEE ELECTRICAL SPECIFICATION.
20. PRESSURE TRANSDUCER FOR WATER LEVEL DETECTION; CABLE MOUNTED SIMILAR TO DETAIL **4/E4.0**; PROVIDE PRESSURE TRANSDUCER; INTRINSICALLY SAFE; POLYURETHANE MOLDED VENTED WITH KEVLAR CABLE, 4 CONDUCTORS; STAINLESS STEEL 316L HOUSING; 4-20mA SIGNAL; PROVIDE WITH SINK WEIGHTS; PROCESS MEASUREMENT & CONTROLS INC. "VERSALINE VL 2000" SERIES.
21. CONCRETE PADS FOR ELECTRICAL EQUIPMENT PROVIDED & INSTALLED UNDER CIVIL PLANS; COORDINATE ELECTRICAL INSTALLATION WITH CIVIL PLANS.
22. DRYWELL FLOAT SWITCH; LOCATED AT BOTTOM OF DRYWELL SEE DETAIL **1/E4.2**.
23. PROVIDE WEATHERPROOF ENCLOSURE FOR GENERATOR; SEE ELECTRICAL SPECIFICATION.

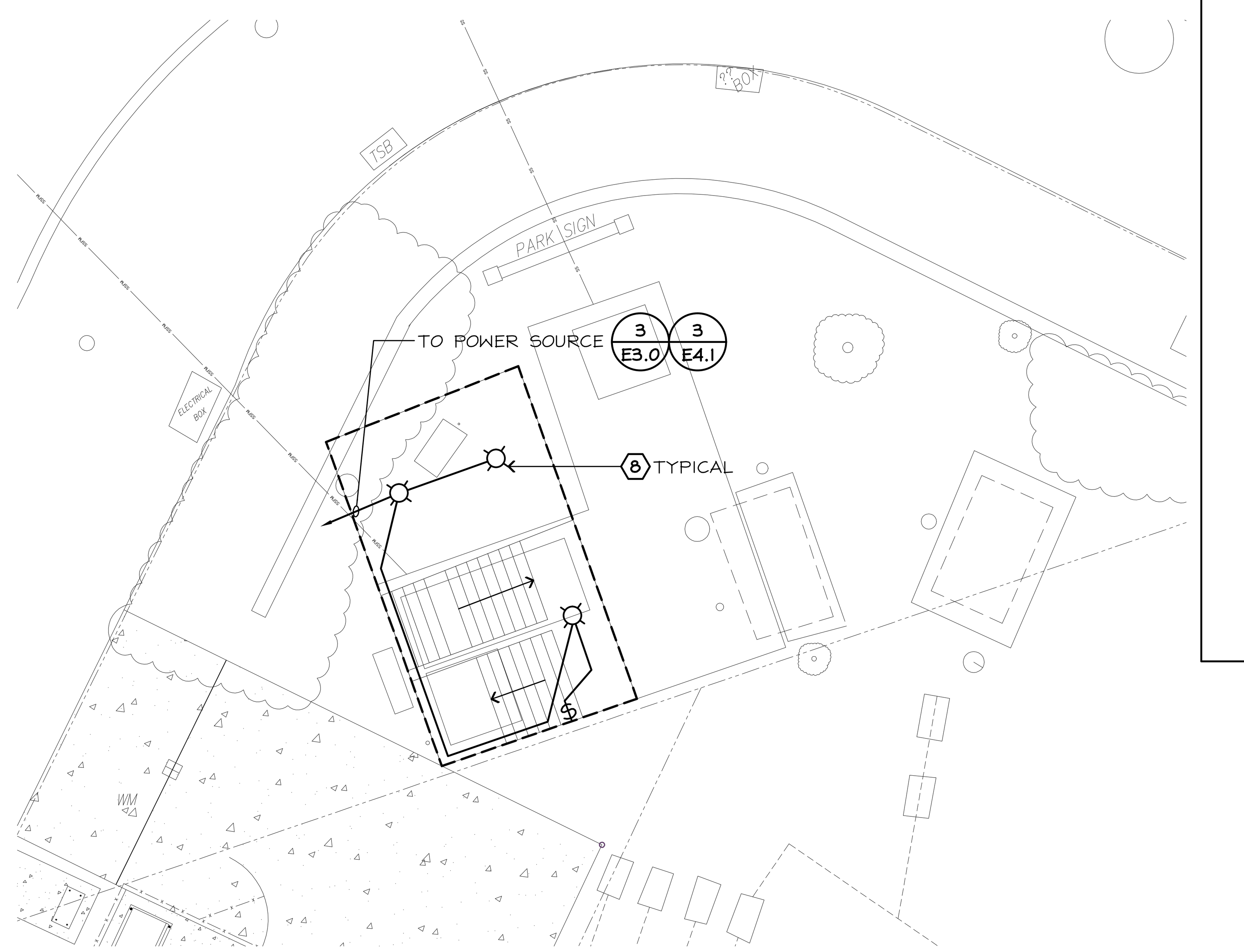

3 LIGHTING PLAN
1"=5'-0"

1"=5'-0" NORTH

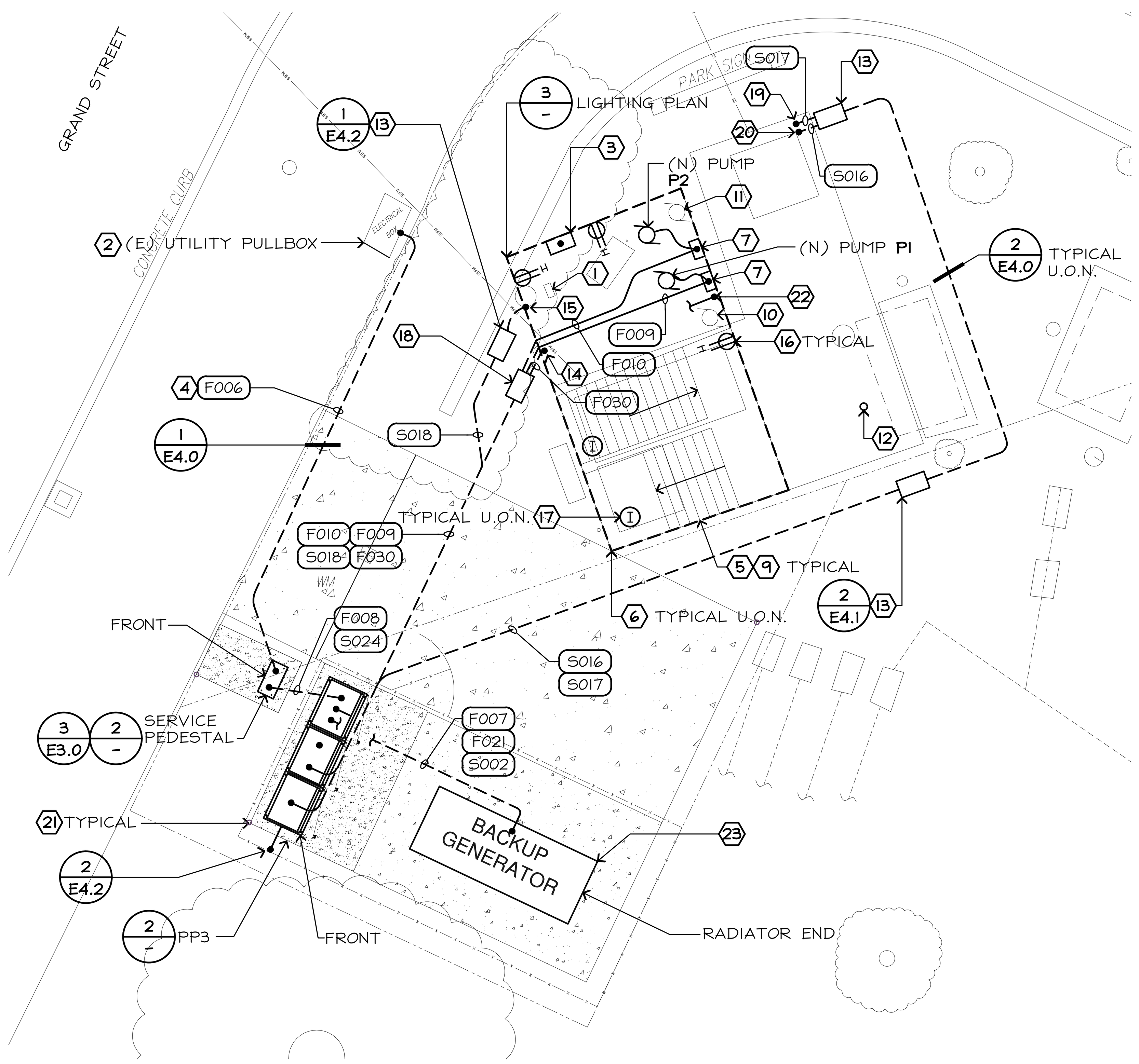

1 GRAND-OTIS PUMP STATION SITE PLAN
1"=5'-0"

1"=5'-0" NORTH

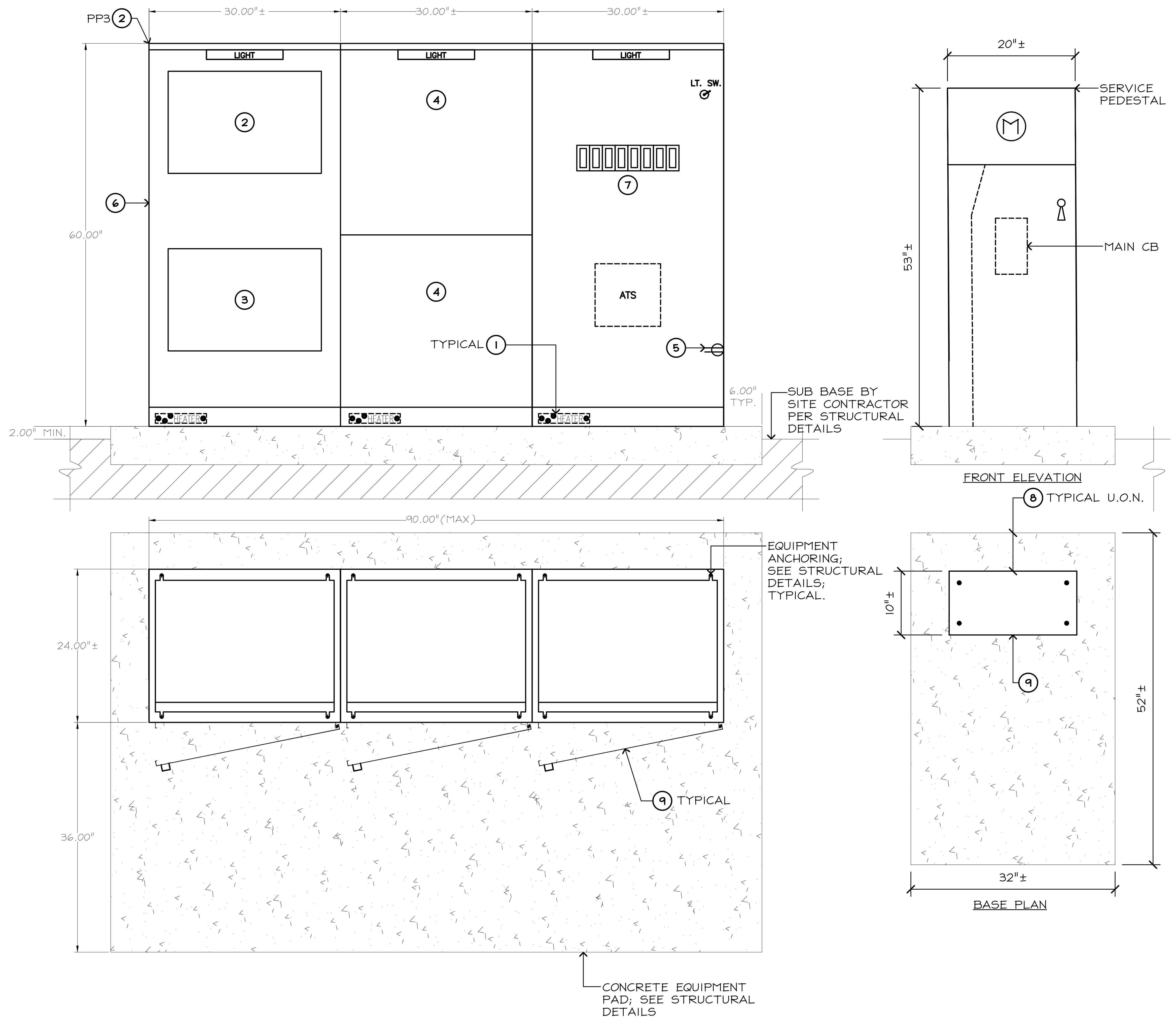

2 PEDESTAL ELEVATION (PP3)
NO SCALE

DETAIL NOTES:

1. SECTION HEATER; 250W MINIMUM 120V; PROVIDE SINGLE THERMOSTAT CONTROL CENTRALLY LOCATED IN PEDESTAL.
2. PUMP CONTROL; SEE ELECTRICAL SPECIFICATION AND DETAILS 1/E5.0 & 3/E5.0.
3. METAL BACK PAN 16" X 24". FOR CITY PROVIDED & INSTALLED SCADA EQUIPMENT.
4. PUMP STARTER; SEE SINGLE LINE DIAGRAM.
5. MAINTENANCE DUPLEX RECEPTACLE.
6. SEE PLAN FOR ANTENNA MAST LOCATION.
7. BRANCH CIRCUIT BREAKERS; SEE DETAIL **3/E3.0**.
8. 6" (MINIMUM) FROM EDGE OF EQUIPMENT TO EDGE OF CONCRETE.
9. PROVIDE INTRUSION ALARM DEVICE AT EACH PEDESTAL DOOR; CLEARWATER TECH 2500 SERIES MAGNETIC POSITION SENSOR OR APPROVED EQUAL; PROVIDE APPROPRIATE MOUNTING HARDWARE FOR EACH DOOR TYPE; SEE CONTROL DIAGRAM AND MAKE APPROPRIATE CONNECTION VIA 2#14.

NO	REVISIONS	DATE	APPR
1			
2			
3			
4			
5			
6			

REGISTERED PROFESSIONAL ENGINEER THOMAS E. PINKERTON E 014906 ELECTRICAL STATE OF CALIFORNIA

FEHR ENGINEERING COMPANY, INC.
62-A HANGAR WAY
WATSONVILLE, CALIFORNIA 95076
PHONE: (831) 786-0373
FAX: (831) 786-8523
EMAIL: FEC@FEHRINC.COM
CONSULTING ELECTRICAL ENGINEERS
FE JOB No. 10051.01

CITY OF ALAMEDA
SEWER PUMP STATIONS BACKUP GENERATOR INSTALLATION, PHASE 1
ELECTRICAL SITE PLAN

DATE:	8/10/11
SCALE:	AS SHOWN
DESIGN:	C.L.
DRAWN:	C.L.
CHECKED:	T.P.

E2.2

⬡ SHEET NOTES

1. (E) LIFT STATION SERVICE PEDESTAL; ELECTRICAL CONTRACTOR SHALL COORDINATE WITH UTILITY TO REMOVE (E) SERVICE AND INSTALL (N) SERVICE; SEE DETAIL 1/E3.1.
2. POINT OF SERVICE CONNECTION; CONTACT CAROLE McMAHON @ (510)-715-7280 FOR ACCESS TO BOX UTILITY JUNCTION BOX & FOR FINAL FEEDER CONNECTION. PROVIDE 6' CONDUCTOR PIGTAIL FOR SERVICE CONNECTION BY UTILITY.
3. APPROXIMATE LOCATION OF (E) MSB IN DRYWELL BELOW; ELECTRICAL CONTRACTOR SHALL DISCONNECT & REMOVE.
4. ARRANGE SERVICE CONDUIT INSTALLATION TO MAINTAIN 360° OR LESS IN CONDUIT BENDS; BENDS SHALL BE WIDE RADIUS BENDS & SHALL HAVE MINIMUM BENDING RADIUS AS NOTED IN CEC FOR CONDUIT TYPE.
5. WHERE (E) GRS CONDUIT MEETS THE REQUIREMENTS OF THE SPECIFICATION AND ELECTRICAL CODE, (E) GRS CONDUIT MAY BE RE-USED.
6. (E) INCANDESCENT LIGHT FIXTURE TO REMAIN; CLEAN FIXTURE & RELAMP WITH 150W BULB; RECIRCUIT AS INDICATED.
7. PUMP RECEPTACLE; SEE DETAIL 5/E4.0.
8. REMOVE & REPLACE (E) UTILITY PULLBOX WITH AMP STANDARD 30" X 48" CONCRETE PULLBOX; PROVIDE TRAFFIC RATED LID; LABEL LID "ELECTRICAL"; (N) PULLBOX SHALL BE INSTALLED TO ACCOMMODATE (E) SERVICES & (N) SERVICE. PRIOR TO BEGINNING WORK COORDINATE REQUIREMENTS WITH UTILITY; CONTACT CAROLE McMAHON @ (510)-715-7280.
9. DRYWELL IS APPROXIMATELY 20' DEEP WITH AREA AS INDICATED (DASHED LINE); SEE CIVIL PLANS.
10. SUMP PUMP CORD & PLUG CONNECTED; INSTALL HAZARDOUS LOCATION PLUG ON (E) SUMP PUMP CORD; LOCATE RECEPTACLE TO CONNECT SUMP PUMP.
11. DISCONNECT AND REMOVE (E) POWER & CONTROLS TO VENT MOTOR.
12. REMOVE (E) ANTENNA MAST MOUNTED AT APPROXIMATELY 20'; SALVAGE (E) ANTENNA & CONDUCTOR FOR REINSTALLATION IN (N) WORK; PATCH DRYWELL PENETRATION(S) THROUGH CONCRETE USING HIGH STRENGTH (4000 PSI MINIMUM) NON-SHRINK GROUT; COORDINATE WORK WITH CITY.
13. CONCRETE PULLBOX; 17" X 10" I.D.; WITH TRAFFIC RATED LID; LABEL LID "SIGNAL".
14. DRYWELL POWER DISTRIBUTION; SEE DETAIL 3/E4.1.
15. DRYWELL SIGNAL DISTRIBUTION. SEE DETAIL 1/E4.2.
16. LOCATION OF (N) RECEPTACLE COINCIDES WITH (E); REMOVE (E) RECEPTACLE & REPLACE WITH (N).
17. INTRUSION ALARM DEVICE; CLEARWATER TECH 2500 SERIES MAGNETIC POSITION SENSOR OR APPROVED EQUAL; PROVIDE APPROPRIATE MOUNTING HARDWARE FOR EACH DOOR TYPE; SEE CONTROL DIAGRAM; DEVICES CONNECTED VIA 1/2"C., 2#14 AND FEEDER AS INDICATED TO CONTROL SECTION OF MSB WHERE APPLICABLE.
18. CONCRETE PULLBOX; 22"X12" I.D.; WITH TRAFFIC RATED LID; LABEL LID "ELECTRICAL"; SEE DETAIL 5/E4.0.
19. FLOAT SWITCH FOR WATER LEVEL DETECTION; CABLE MOUNTED SIMILAR TO 4/E4.0. SEE ELECTRICAL SPECIFICATION.
20. PRESSURE TRANSDUCER FOR WATER LEVEL DETECTION; CABLE MOUNTED SIMILAR TO DETAIL 4/E4.0; PROVIDE PRESSURE TRANSDUCER; INTRINSICALLY SAFE; POLYURETHANE MOLDED VENTED WITH KEVLAR CABLE, 4 CONDUCTORS; STAINLESS STEEL 316L HOUSING; 4-20mA SIGNAL; PROVIDE WITH SINK WEIGHTS; PROCESS MEASUREMENT & CONTROLS INC. "VERSALINE VL 2000" SERIES.
21. CONCRETE PADS FOR ELECTRICAL EQUIPMENT PROVIDED & INSTALLED UNDER CIVIL PLANS; COORDINATE ELECTRICAL INSTALLATION WITH CIVIL PLANS.
22. DRYWELL FLOAT SWITCH; LOCATED AT BOTTOM OF DRYWELL SEE DETAIL 1/E4.2.
23. CONTRACTOR SHALL DISCONNECT & REMOVE ALL (E) ELECTRICAL EQUIPMENT IN DRY WELL (INCLUDING LIGHTS, RECEPTACLES, EQUIPMENT, ETC.).
24. PROVIDE WEATHERPROOF ENCLOSURE FOR GENERATOR; SEE ELECTRICAL SPECIFICATION.

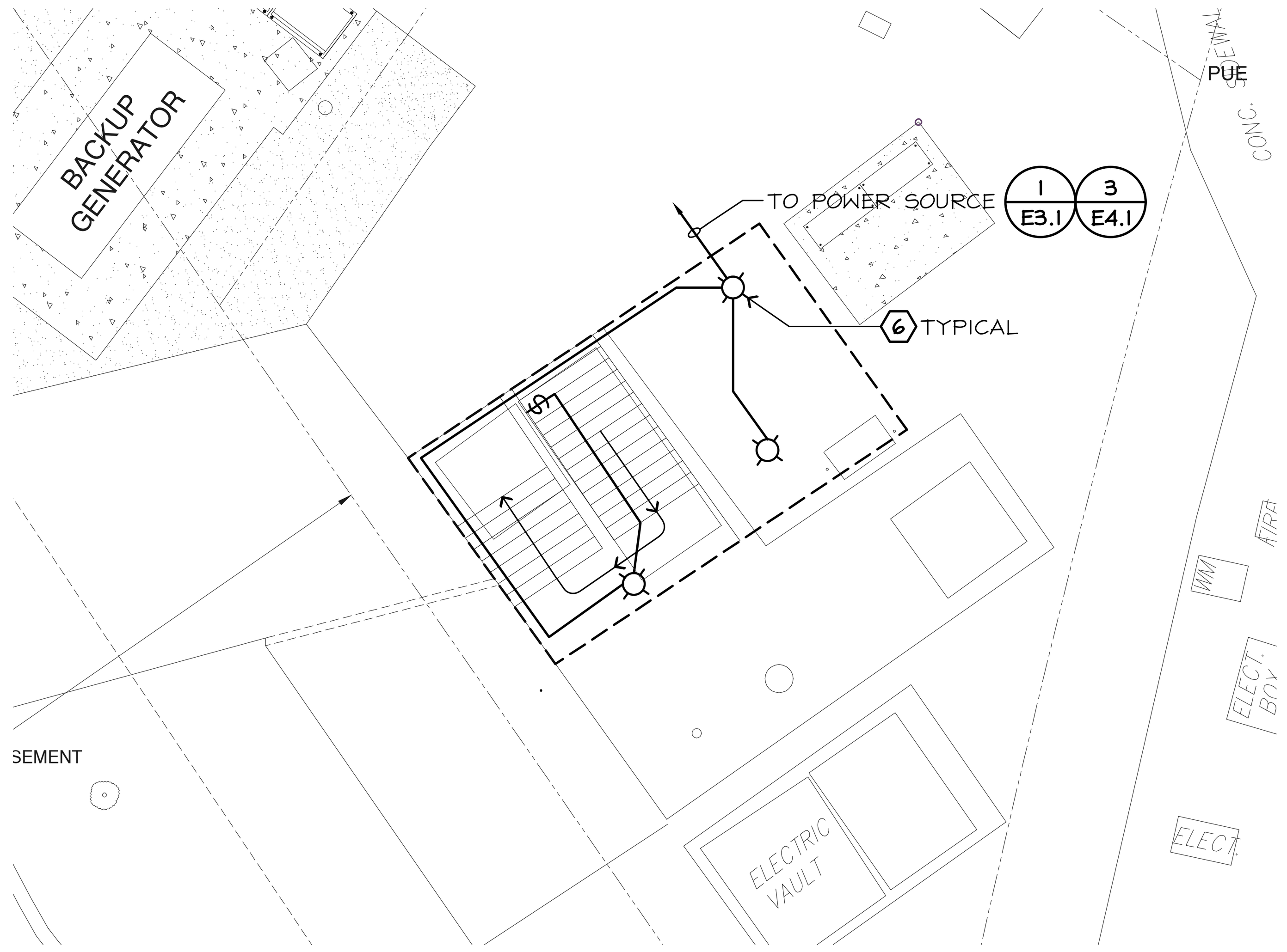

3 LIGHTING PLAN
1"=5'-0"

5' 2.5' 0 5' 10'
1"=5'-0"
NORTH

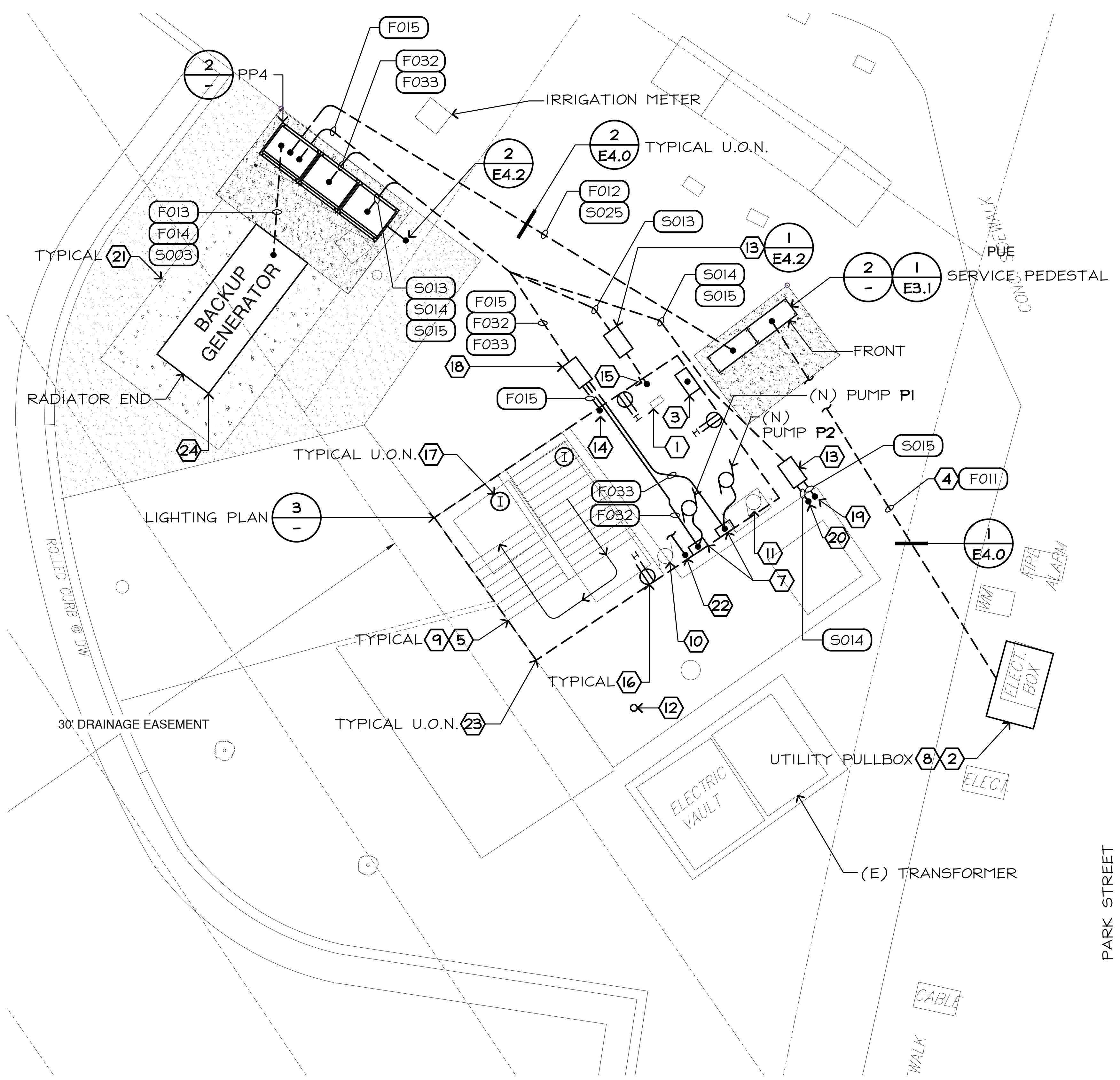

1 PARK-OTIS PUMP STATION SITE PLAN
1"=5'-0"

5' 2.5' 0 5' 10'
1"=5'-0"
NORTH

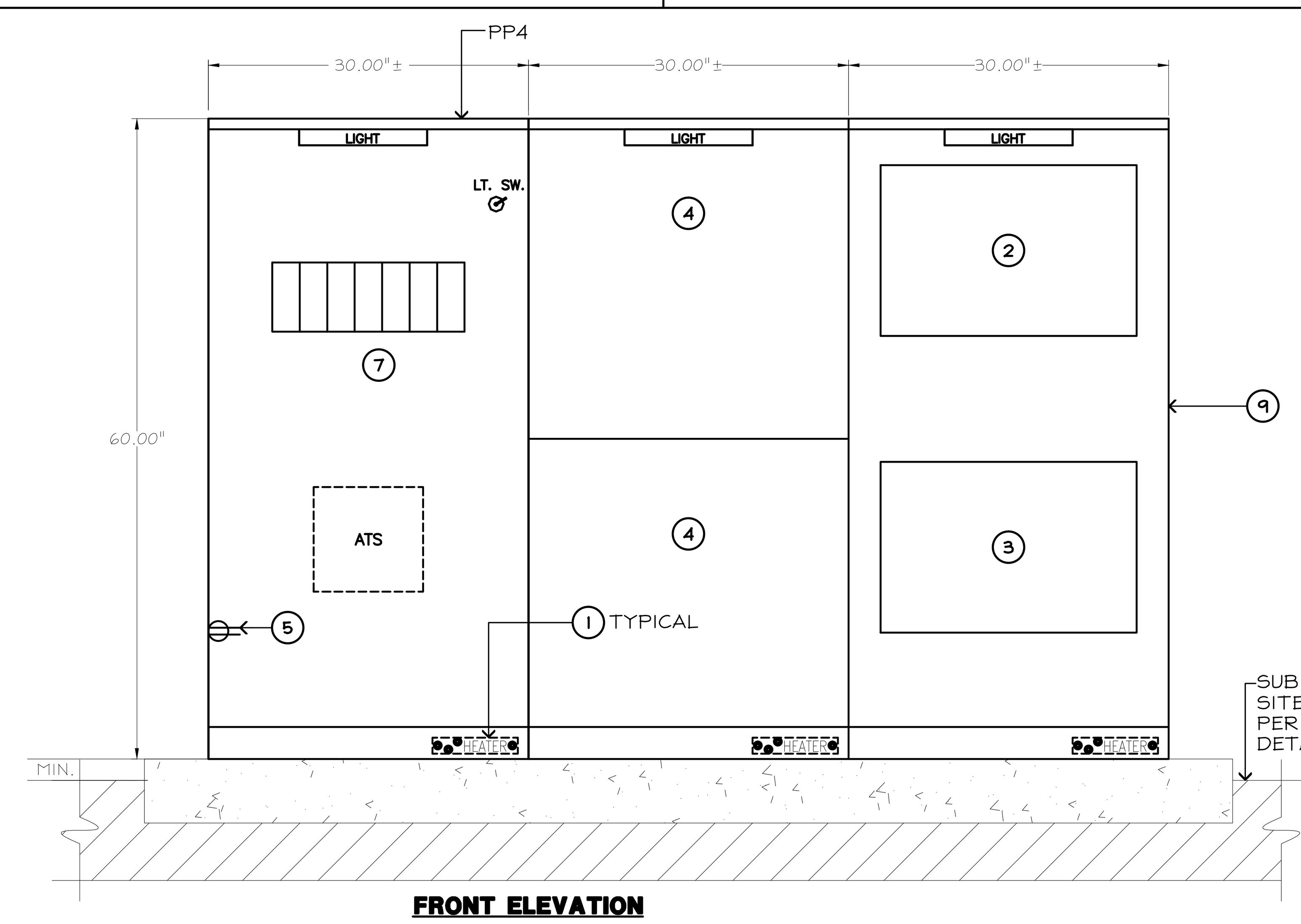

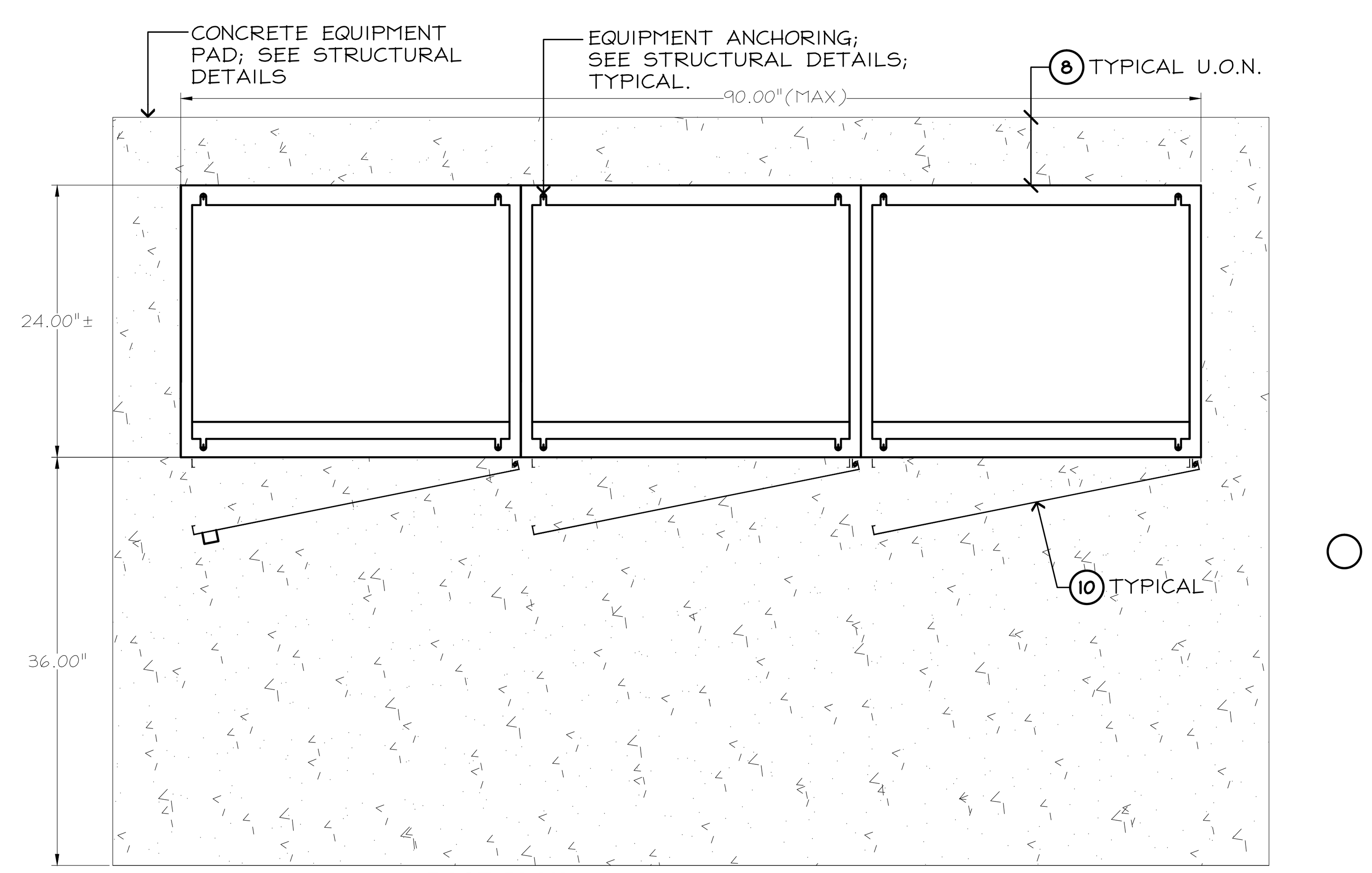

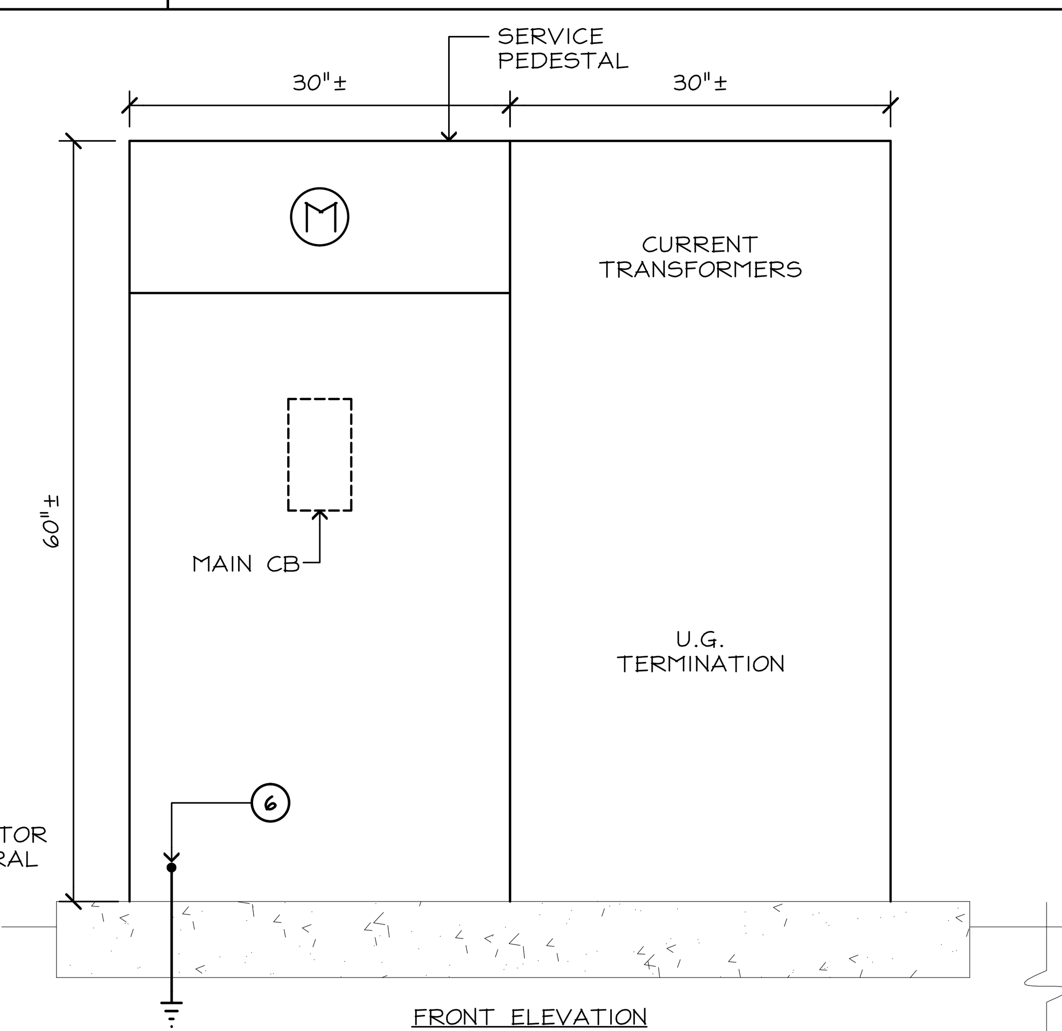

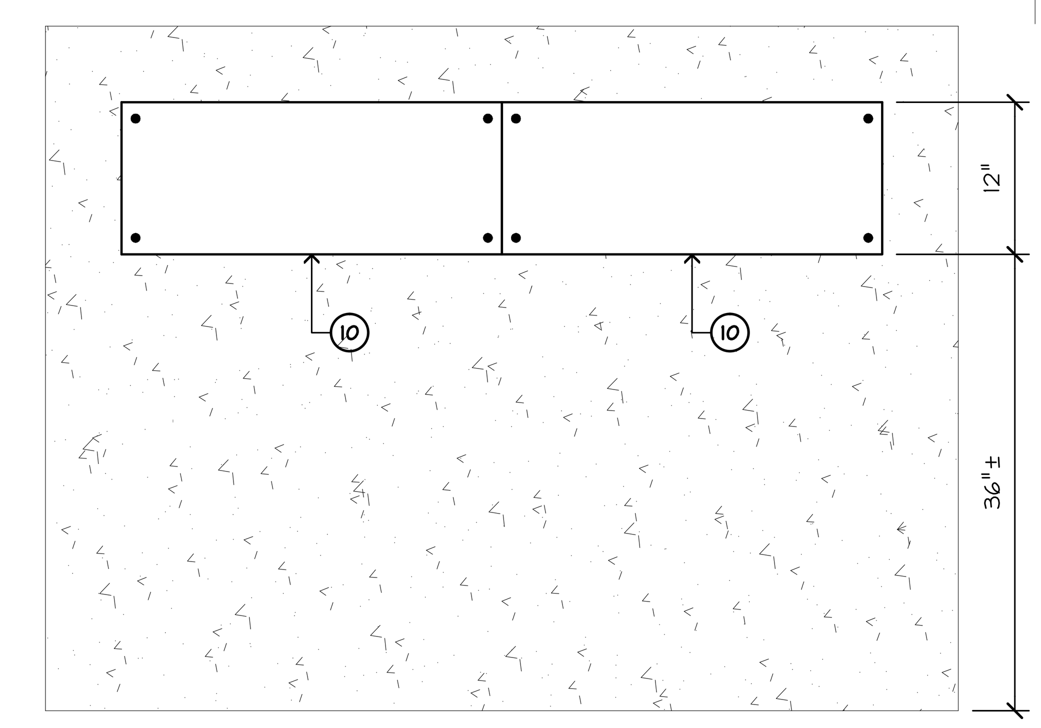

2 PEDESTAL ELEVATION
NO SCALE

○ DETAIL NOTES:

1. SECTION HEATER; 250W MINIMUM 120V; PROVIDE SINGLE THERMOSTAT CONTROL CENTRALLY LOCATED IN PEDESTAL.
2. PUMP CONTROL; SEE ELECTRICAL SPECIFICATION AND DETAILS 1/E5.0 & 3/E5.0.
3. METAL BACK PAN 16" X 24". FOR CITY PROVIDED & INSTALLED SCADA EQUIPMENT.
4. PUMP STARTER; SEE SINGLE LINE DIAGRAM.
5. MAINTENANCE DUPLEX RECEPTACLE.
6. GROUND ROD; SEE ELECTRICAL SPECIFICATION AND SITE SINGLE LINE DIAGRAM.
7. BRANCH CIRCUIT BREAKERS; SEE DETAIL 1/E3.1.
8. 6" (MINIMUM) FROM EDGE OF EQUIPMENT TO EDGE OF CONCRETE.
9. SEE PLAN FOR ANTENNA MAST LOCATION.
10. PROVIDE INTRUSION ALARM DEVICE AT EACH PEDESTAL DOOR; CLEARWATER TECH 2500 SERIES MAGNETIC POSITION SENSOR OR APPROVED EQUAL; PROVIDE APPROPRIATE MOUNTING HARDWARE FOR EACH DOOR TYPE; SEE CONTROL DIAGRAM AND MAKE APPROPRIATE CONNECTION VIA 2#14.

NO	REVISIONS	DATE	APPR
1			
2			
3			
4			
5			
6			

REGISTERED PROFESSIONAL ENGINEER — THOMAS E. PINKERTON — No. 014906 — Exp. 3/30/2012 — ELECTRICAL — STATE OF CALIFORNIA

FEHR ENGINEERING COMPANY, INC.
62-A HANGAR WAY
WATSONVILLE, CALIFORNIA 95076
PHONE: (831) 786-0373
FAX: (831) 786-8523
EMAIL: FEC@FEHRINC.COM
CONSULTING ELECTRICAL ENGINEERS
FE JOB No. 10051.01

CITY OF ALAMEDA
SEWER PUMP STATIONS BACKUP GENERATOR INSTALLATION, PHASE 1
ELECTRICAL SITE PLAN

DATE:	8/10/11
SCALE:	AS SHOWN
DESIGN:	C.L.
DRAWN:	C.L.
CHECKED:	T.P.

SHEET NOTES

1. (E) LIFT STATION SERVICE PEDESTAL; ELECTRICAL CONTRACTOR SHALL COORDINATE WITH UTILITY TO REMOVE (E) SERVICE AND INSTALL (N) SERVICE; SEE DETAIL **2/E3.1**.
2. POINT OF SERVICE CONNECTION; CONTACT CAROLE McMAHON @ (510)-715-7280 FOR ACCESS TO BOX UTILITY JUNCTION BOX & FOR FINAL FEEDER CONNECTION. PROVIDE 6' CONDUCTOR PIGTAIL FOR SERVICE CONNECTION BY UTILITY.
3. APPROXIMATE LOCATION OF (E) PUMP CONTROLLER IN DRYWELL BELOW; ELECTRICAL CONTRACTOR SHALL DISCONNECT & REMOVE.
4. ARRANGE SERVICE CONDUIT INSTALLATION TO MAINTAIN 360° OR LESS IN CONDUIT BENDS; BENDS SHALL BE WIDE RADIUS BENDS & SHALL HAVE MINIMUM BENDING RADIUS AS NOTED IN CEC FOR CONDUIT TYPE.
5. WHERE (E) GRS CONDUIT MEETS THE REQUIREMENTS OF THE SPECIFICATION AND ELECTRICAL CODE, (E) GRS CONDUIT MAY BE RE-USED.
6. CONCRETE PULLBOX; 22" X 12" I.D.; LABEL LID "ELECTRICAL"; PROVIDE TRAFFIC RATED LID; SEE DETAIL **2/E4.1**.
7. PUMP RECEPTACLE; SEE DETAIL **5/E4.0**.
8. (E) INCANDESCENT LIGHT FIXTURE TO REMAIN; CLEAN FIXTURE & RELAMP WITH 150W BULB; RECIRCUIT AS INDICATED.
9. DRYWELL IS APPROXIMATELY 20' DEEP WITH AREA AS INDICATED (DASHED LINE); SEE CIVIL PLANS.
10. SUMP PUMP CORD & PLUG CONNECTED; INSTALL HAZARDOUS LOCATION PLUG ON (E) SUMP PUMP CORD TO MATCH RECEPTACLE; LOCATE RECEPTACLE TO CONNECT SUMP PUMP.
11. DISCONNECT AND REMOVE (E) POWER & CONTROLS TO VENT MOTOR.
12. REMOVE (E) ANTENNA MAST MOUNTED AT APPROXIMATELY 25'; SALVAGE (E) ANTENNA & CONDUCTOR FOR REINSTALLATION IN (N) WORK; PATCH DRYWELL PENETRATION(S) THROUGH CONCRETE USING HIGH STRENGTH (4000 PSI MINIMUM) NON-SHRINK GROUT; COORDINATE WORK WITH CITY.
13. CONCRETE PULLBOX; 17" X 10" I.D.; WITH TRAFFIC RATED LID; LABEL LID "SIGNAL".
14. DRYWELL POWER DISTRIBUTION; SEE DETAIL **3/E4.1**.
15. DRYWELL SIGNAL DISTRIBUTION. SEE DETAIL **1/E4.2**.
16. LOCATION OF (N) RECEPTACLE COINCIDES WITH (E); REMOVE (E) RECEPTACLE & REPLACE WITH (N).
17. INTRUSION ALARM DEVICE; CLEARWATER TECH 2500 SERIES MAGNETIC POSITION SENSOR OR APPROVED EQUAL; PROVIDE APPROPRIATE MOUNTING HARDWARE FOR EACH DOOR TYPE; SEE CONTROL DIAGRAM; DEVICES CONNECTED VIA 1/2"C., 2#14 AND FEEDER AS INDICATED TO CONTROL SECTION OF MSB WHERE APPLICABLE.
18. CONCRETE PULLBOX; 22"X12" I.D.; WITH TRAFFIC RATED LID; LABEL LID "ELECTRICAL"; SEE DETAIL **5/E4.0**.
19. FLOAT SWITCH FOR WATER LEVEL DETECTION; CABLE MOUNTED SIMILAR TO **4/E4.0**. SEE ELECTRICAL SPECIFICATION.
20. PRESSURE TRANSDUCER FOR WATER LEVEL DETECTION; CABLE MOUNTED SIMILAR TO DETAIL **4/E4.0**; PROVIDE PRESSURE TRANSDUCER; INTRINSICALLY SAFE; POLYURETHANE MOLDED VENTED WITH KEVLAR CABLE, 4 CONDUCTORS; STAINLESS STEEL 316L HOUSING; 4-20mA SIGNAL; PROVIDE WITH SINK WEIGHTS; PROCESS MEASUREMENT & CONTROLS INC. "VERSALINE VL 2000" SERIES.
21. CONCRETE PADS FOR ELECTRICAL EQUIPMENT PROVIDED & INSTALLED UNDER CIVIL PLANS; COORDINATE ELECTRICAL INSTALLATION WITH CIVIL PLANS.
22. DRYWELL FLOAT SWITCH; LOCATED AT BOTTOM OF DRYWELL SEE DETAIL **1/E4.2**.
23. CONTRACTOR SHALL DISCONNECT & REMOVE ALL (E) ELECTRICAL EQUIPMENT IN DRY WELL (INCLUDING LIGHTS, RECEPTACLES, EQUIPMENT, ETC.).
24. PROVIDE WEATHERPROOF ENCLOSURE FOR GENERATOR; SEE ELECTRICAL SPECIFICATION.

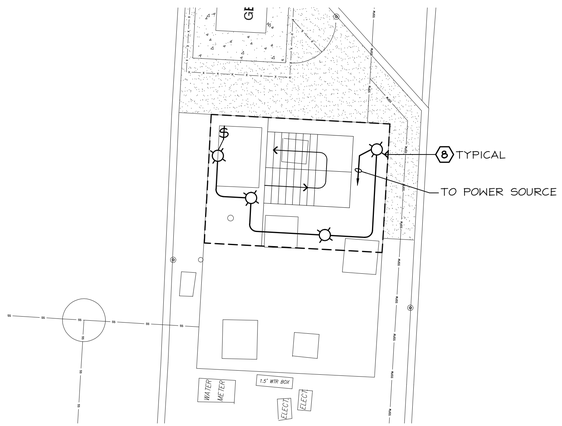

3 **LIGHTING PLAN**
1"=5'-0"

5' 2.5' 0 5' 10'
1"=5'-0"
NORTH

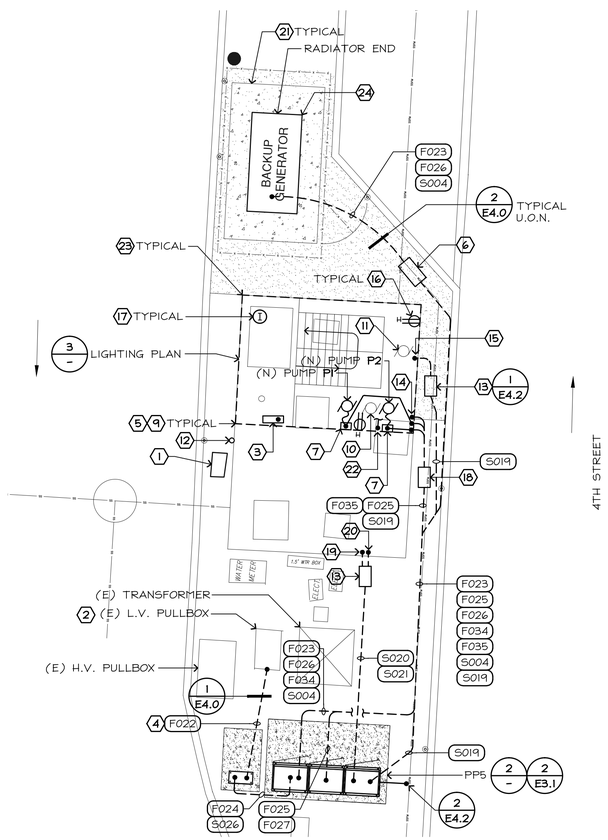

1 **TIDEWAY PUMP STATION SITE PLAN**
1"=5'-0"

5' 2.5' 0 5' 10'
1"=5'-0"
NORTH

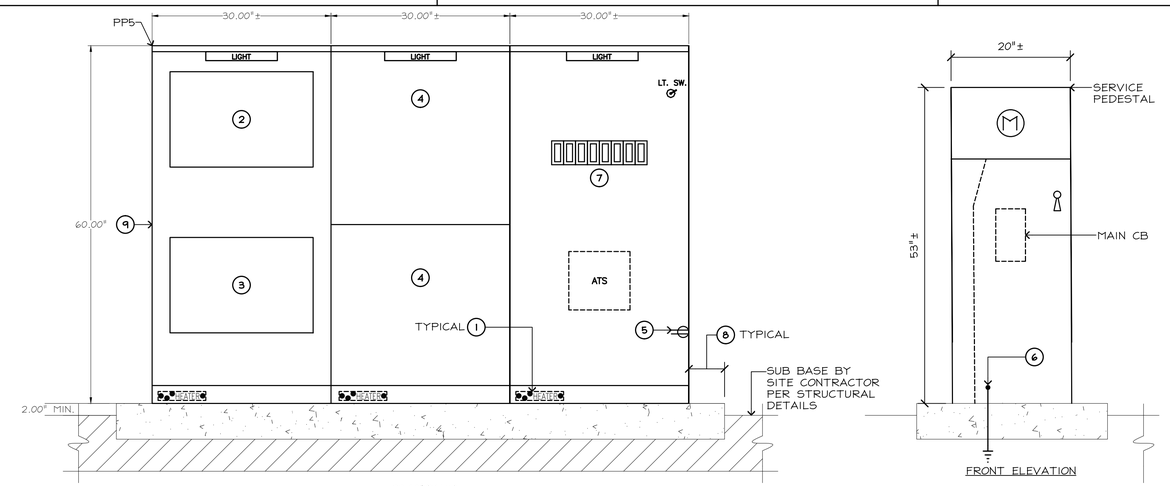

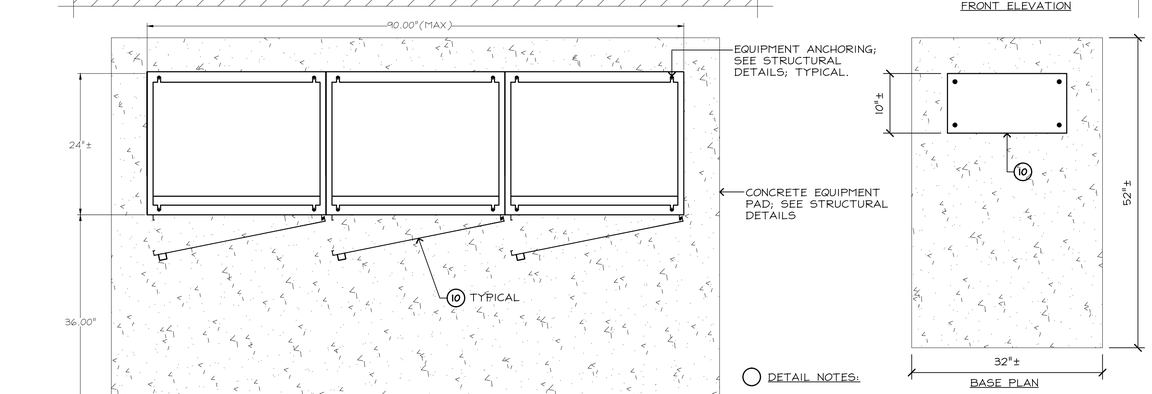

2 **PEDESTAL ELEVATION**
NO SCALE

DETAIL NOTES:

1. SECTION HEATER; 250W MINIMUM 120V; PROVIDE SINGLE THERMOSTAT CONTROL CENTRALLY LOCATED IN PEDESTAL.
2. PUMP CONTROL; SEE ELECTRICAL SPECIFICATION AND DETAILS **1/E5.0** & **3/E5.0**.
3. METAL BACK PAN 16" X 24". FOR CITY PROVIDED & INSTALLED SCADA EQUIPMENT.
4. PUMP STARTER; SEE SINGLE LINE DIAGRAM.
5. MAINTENANCE DUPLEX RECEPTACLE.
6. GROUND ROD; SEE ELECTRICAL SPECIFICATION AND SITE SINGLE LINE DIAGRAM.
7. BRANCH CIRCUIT BREAKERS; SEE DETAIL **2/E3.1**.
8. 6" (MINIMUM) FROM EDGE OF EQUIPMENT TO EDGE OF CONCRETE.
9. SEE PLAN FOR ANTENNA MAST LOCATION.
10. PROVIDE INTRUSION ALARM DEVICE AT EACH PEDESTAL DOOR; CLEARWATER TECH 2500 SERIES MAGNETIC POSITION SENSOR OR APPROVED EQUAL; PROVIDE APPROPRIATE MOUNTING HARDWARE FOR EACH DOOR TYPE; SEE CONTROL DIAGRAM AND MAKE APPROPRIATE CONNECTION VIA 2#14.

NO	DATE	REVISIONS	APPR
1			
2			
3			
4			
5			
6			
7			

REGISTERED PROFESSIONAL ENGINEER
THOMAS E. PINKERTON
No. 014906
Exp. 30 JUNE 12
ELECTRICAL
STATE OF CALIFORNIA

FEHR ENGINEERING COMPANY, INC.
62-5A HANGAR WAY
WATSONVILLE, CA 95076
PHONE: (831) 786-0373
FAX: (831) 786-8523
EMAIL: FE@FEHRENG.COM
CONSULTING ELECTRICAL ENGINEERS
FE JOB No. 1005.01

CITY OF ALAMEDA
SEWER PUMP STATIONS BACKUP GENERATOR INSTALLATION, PHASE 1
ELECTRICAL SITE PLAN

DATE:	8/10/11
SCALE:	AS SHOWN
DESIGN:	C.L.
DRAWN:	C.L.
CHECKED:	T.P.

E2.4

GENERAL SINGLE LINE NOTES

A. ALL ELECTRICAL SHOWN IS NEW, U.O.N.

B. ALL CIRCUIT BREAKERS ARE 3-POLE, U.O.N.

C. VOLTAGE DESIGNATIONS: (U.O.N.)
240-1 = 240/120V-1PH-3 WIRE
480-1 = 480V-1PH-2 WIRE
208Y = 208/120V-3PH-4 WIRE
240Δ = 240/120V-3PH-4 WIRE
480Y = 480/277V-3PH-4 WIRE
480Δ = 480V-3PH-3 WIRE

D. "KA" AT CIRCUIT BREAKERS DENOTES MINIMUM REQUIRED INTERRUPTING CAPACITY IN AMPS (x 1000).

E. SPO AT BREAKER DENOTES: PROVIDE MOUNTING SPACE & HARDWARE FOR FUTURE 3-POLE BREAKER OF RATINGS INDICATED.

F. Isc= AVAILABLE SHORT CIRCUIT (RMS SYM. AMPS) BASED ON 500MVA SHORT-CIRCUIT DUTY AT SERVICE XFMR PRIMARY AND 7.5% BELOW NOMINAL XFMR IMPEDENCES; VALUES ON LOAD-SIDE OF MAIN SWITCHBOARD INCLUDE MOTOR CONTRIBUTION.

⬡ SHEET NOTES

1. MOTOR CIRCUIT SIZED FOR NEXT HIGHER STANDARD MOTOR RATING PER CEC.
2. PROVIDE 3 SPARE CIRCUIT BREAKERS SIZED AS INDICATED.
3. ELECTRONIC REDUCED VOLTAGE STARTER.
4. GROUND ROD LOCATED WITHIN PEDESTAL ENCLOSURE; SEE DETAIL **1/E4.1**.
5. GROUND GENERATOR PER EQUIPMENT MANUFACTURE RECOMMENDATIONS; BOND SERVICE GROUND & GENERATOR GROUND.
6. DISCONNECT & REMOVE (E) FEEDERS TO STATION.
7. CONNECT (N) FEEDER TO (E) CIRCUIT BREAKER.
8. (E) UTILITY PULLBOX; SEE SITE PLAN FOR CONNECTION REQUIREMENTS.
9. STATION LOADS; SUMP PUMP; LIGHTS; CONVENIENCE RECEPTACLES; ARRANGE CIRCUITS PHASING FOR SHARED NEUTRAL.
10. VERIFY WITH UTILITY EXACT AVAILABLE FAULT LEVEL PRIOR TO EQUIPMENT PURCHASE; NOTIFY PROJECT ENGINEER OF DISCREPANCIES BETWEEN EXACT FAULT LEVEL & THAT NOTED; ELECTRICAL EQUIPMENT SHALL HAVE A MINIMUM FAULT LEVEL RATING TO MATCH EXACT FAULT LEVEL AVAILABLE.
11. PUMP RECEPTACLE; SEE DETAIL **6/E4.0**; AMPERE RATING TO MATCH CIRCUIT BREAKER RATING.
12. COMBINATION MOTOR CONTROLLER; SEE ELECTRICAL SPECIFICATION.

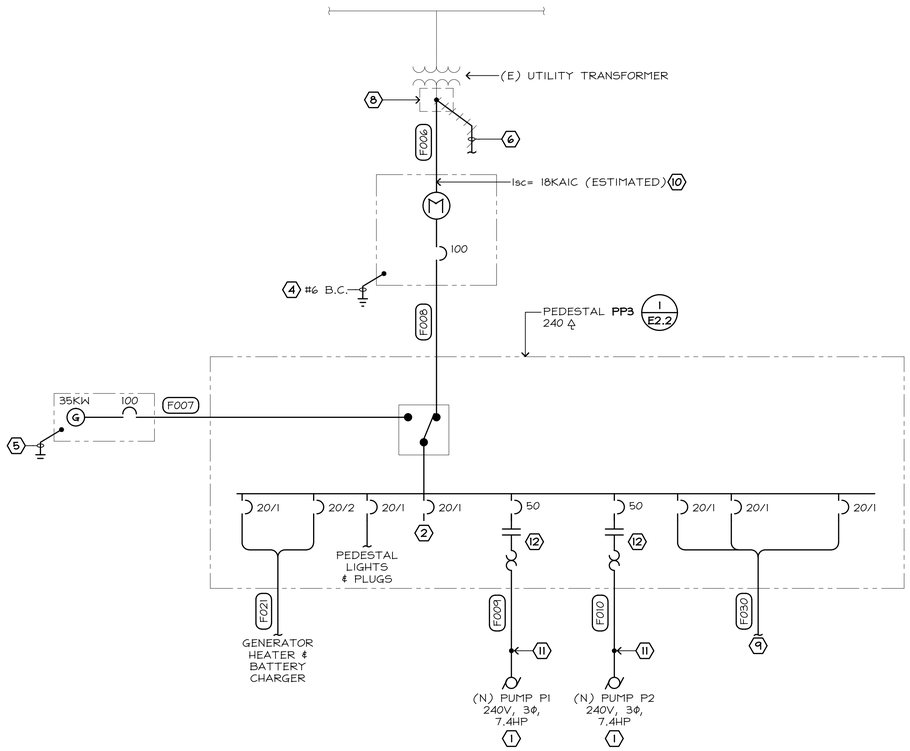

3 **SINGLE LINE DIAGRAM (GRAND-OTIS STATION)**
NO SCALE

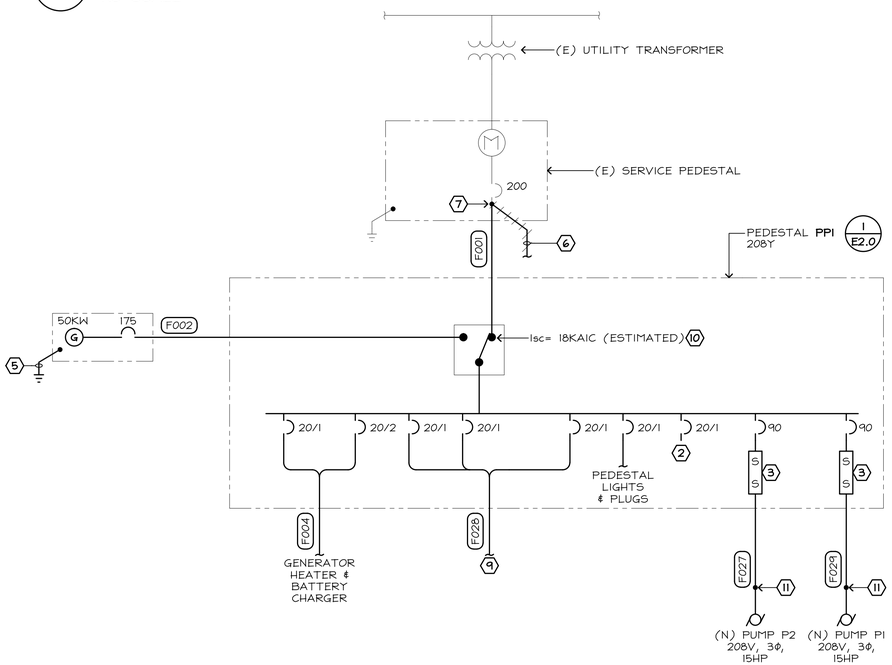

1 **SINGLE LINE DIAGRAM (CATALINA STATION)**
NO SCALE

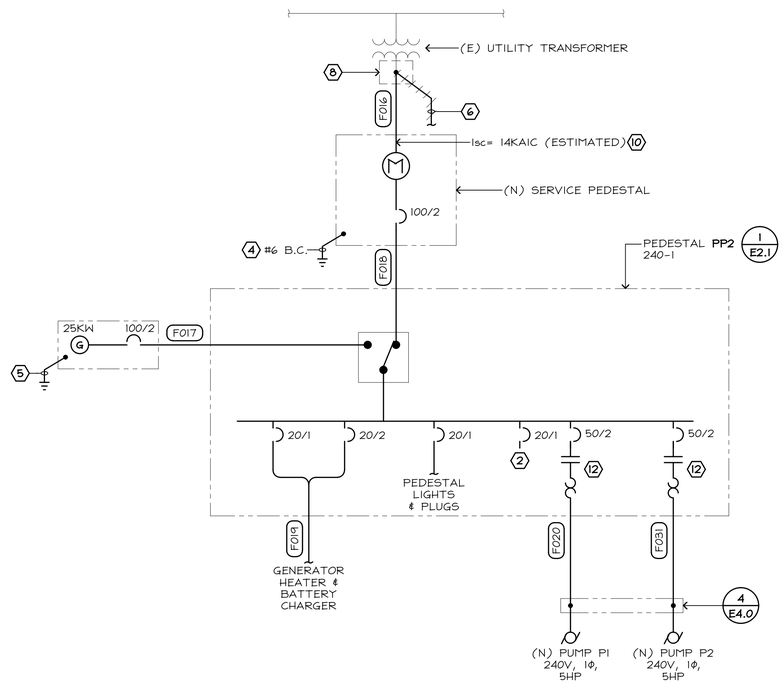

2 **SINGLE LINE DIAGRAM (DUBLIN STATION)**
NO SCALE

NO	REVISIONS	DATE	APPR
1			
2			
3			
4			
5			
6			
7			

REGISTERED PROFESSIONAL ENGINEER
THOMAS E. PINKERTON
No. 014906
Exp. 30 JUNE 13
ELECTRICAL
STATE OF CALIFORNIA

FEHR ENGINEERING COMPANY, INC.
622-A HANGAR WAY
WATSONVILLE, CALIFORNIA 95076
PHONE: (831) 786-0373
FAX: (831) 786-8523
EMAIL: FEHR@FEHRENG.COM
CONSULTING ELECTRICAL ENGINEERS
FE JOB No. 10051.01

CITY OF ALAMEDA
SEWER PUMP STATIONS BACKUP GENERATOR INSTALLATION, PHASE 1
SINGLE LINE DIAGRAM

DATE:	8/10/11
SCALE:	AS SHOWN
DESIGN:	C.L.
DRAWN:	C.L.
CHECKED:	T.P.

E3.0

⬡ SHEET NOTES

1. ELECTRICAL CONTRACTOR SHALL DISCONNECT & REMOVE (E) STATION SERVICE; RECONNECT (N) SERVICE AS INDICATED.
2. GROUND ROD LOCATED WITHIN PEDESTAL ENCLOSURE; SEE DETAILS **2/E2.3** & **1/E4.1**.
3. PROVIDE 3 SPARE CIRCUIT BREAKERS SIZED AS INDICATED.
4. (E) UTILITY PULLBOX; SEE SITE PLAN FOR CONNECTION REQUIREMENTS.
5. STATION LOADS; SUMP PUMP; LIGHTS; CONVENIENCE RECEPTACLES; ARRANGE CIRCUITS PHASING FOR SHARED NEUTRAL.
6. ELECTRONIC REDUCE VOLTAGE STARTER.
7. MOTOR CIRCUIT SIZED FOR NEXT HIGHER STANDARD MOTOR RATING PER C.E.C.
8. GROUND GENERATOR PER EQUIPMENT MANUFACTURE RECOMMENDATIONS; BOND SERVICE GROUND & GENERATOR GROUND.
9. VERIFY WITH UTILITY EXACT AVAILABLE FAULT LEVEL PRIOR TO EQUIPMENT PURCHASE; NOTIFY PROJECT ENGINEER OF DISCREPANCIES BETWEEN EXACT FAULT LEVEL & THAT NOTED; ELECTRICAL EQUIPMENT SHALL HAVE A MINIMUM FAULT LEVEL RATING TO MATCH EXACT FAULT LEVEL AVAILABLE.
10. PUMP RECEPTACLE; SEE DETAIL **6/E4.0**; AMPERE RATING TO MATCH CIRCUIT BREAKER RATING.
11. COMBINATION MOTOR CONTROLLER; SEE ELECTRICAL SPECIFICATION.

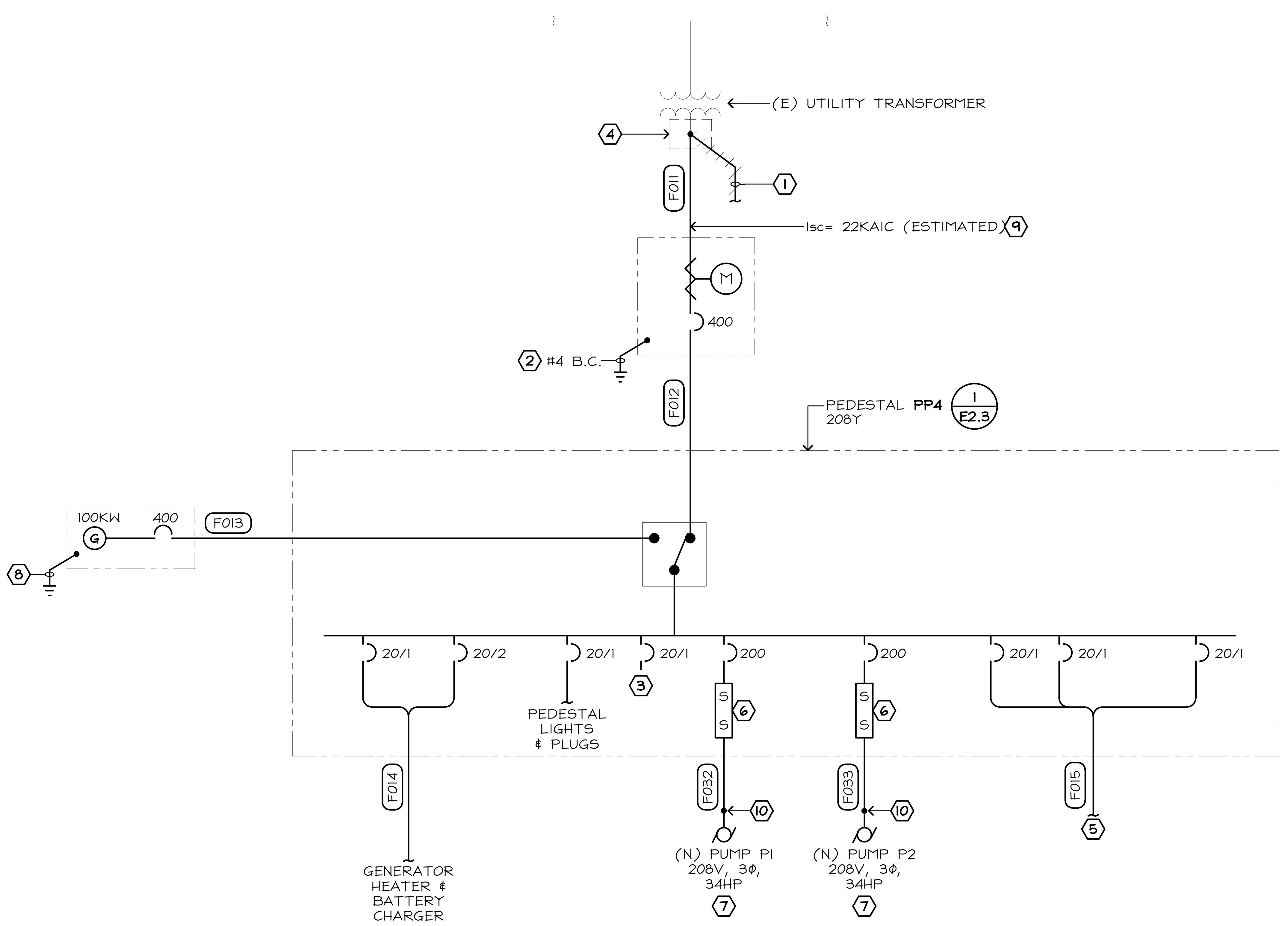

1 SINGLE LINE DIAGRAM (PARK-OTIS STATION)

NO SCALE

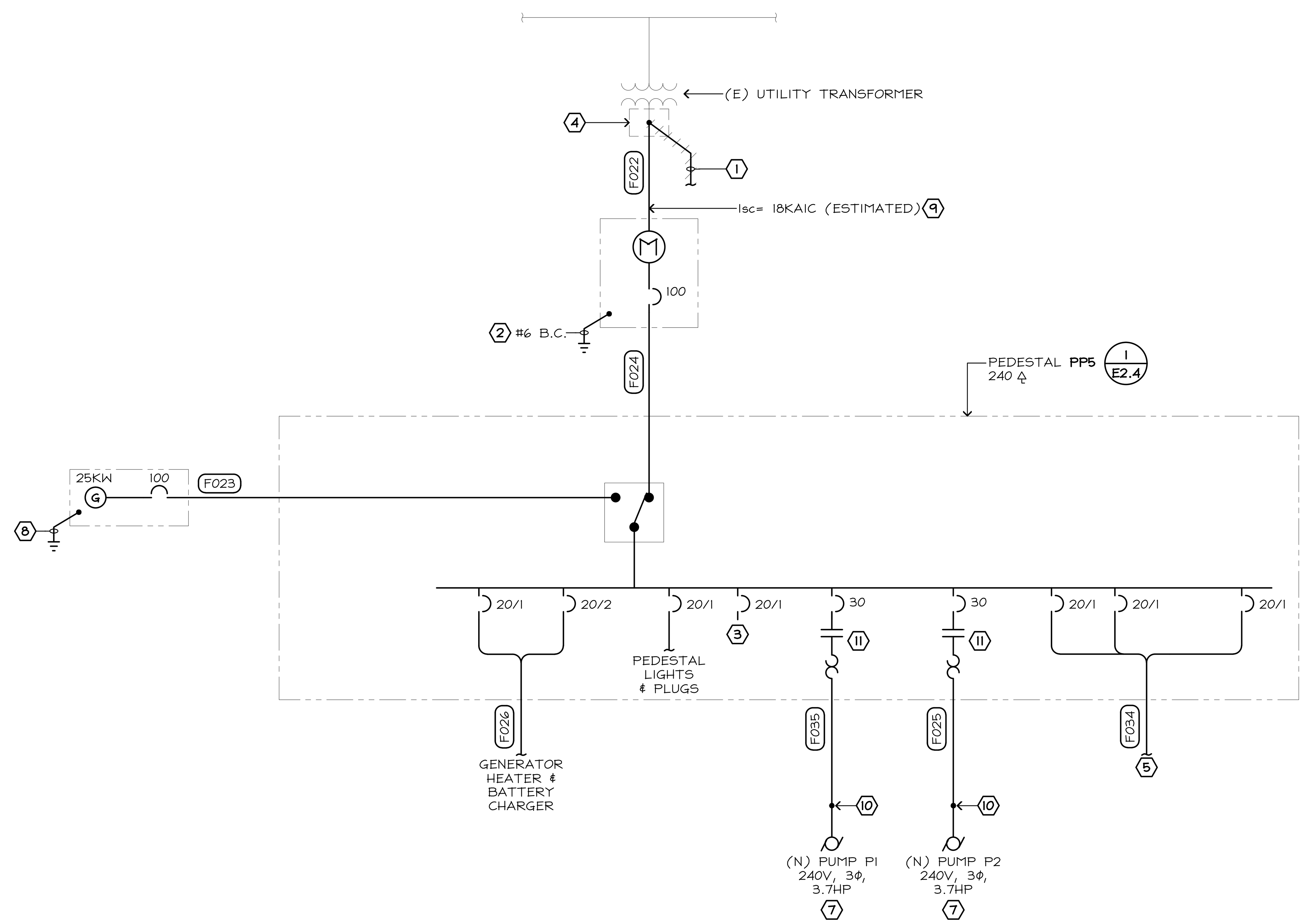

2 SINGLE LINE DIAGRAM (TIDEWAY STATION)

NO SCALE

NO	REVISIONS	DATE	APPR
1			
2			
3			
4			
5			
6			

REGISTERED PROFESSIONAL ENGINEER
THOMAS E. PINKERTON
No. 014906
Exp. 30 JUNE
ELECTRICAL
STATE OF CALIFORNIA

FEHR ENGINEERING COMPANY, INC.
62-A HANGAR WAY
WATSONVILLE, CALIFORNIA, 95076
PHONE: (831) 786-0373
FAX: (831) 786-8523
EMAIL: FEC@FEHRINC.COM
CONSULTING ELECTRICAL ENGINEERS
FE JOB No. **10051.01**

CITY OF ALAMEDA
SEWER PUMP STATIONS BACKUP GENERATOR INSTALLATION, PHASE 1
SINGLE LINE DIAGRAM

DATE:	8/10/11
SCALE:	AS SHOWN
DESIGN:	C.L.
DRAWN:	C.L.
CHECKED:	T.P.

E3.1

FEEDER SCHEDULE

FDR No.	CONDUIT AND CONDUCTORS	REMARK
F001	2"C., 4#3/0, 1#6 GND.	MAIN FEEDER (CATALINA)
F002	2"C., 4#2/0, 1#6 GND.	(CATALINA)
F003	-NOT USED-	
F004	¾"C., 4#12, 1#12 GND.	(CATALINA)
F005	-NOT USED-	
F006	2"C., 4#2, 1#8 GND.	UTILITY SERVICE (GRAND-OTIS)
F007	2"C., 4#2, 1#8 GND.	(GRAND-OTIS)
F008	2"C., 4#2, 1#8 GND.	(GRAND-OTIS)
F009	1"C., 3#10, 1#10 GND. & 2#14	(GRAND-OTIS) FEEDER & SIGNAL CONDUCTORS
F010	1"C., 3#10, 1#10 GND. & 2#14	(GRAND-OTIS) FEEDER & SIGNAL CONDUCTORS
F011	(2 SETS) 2"C., 4#3/0, 1#2 GND.	UTILITY SERVICE (PARK-OTIS)
F012	(2 SETS) 2"C., 4#3/0, 1#2 GND.	(PARK-OTIS)
F013	(2 SETS) 2"C., 4#3/0, 1#2 GND.	(PARK-OTIS)
F014	¾"C., 4#12, 1#12 GND.	(PARK-OTIS)
F015	1"C., 4#12, 1#12 GND.	(PARK-OTIS)
F016	2"C., 3#2, 1#8 GND.	UTILITY SERVICE (DUBLIN)
F017	2"C., 3#2, 1#8 GND.	(DUBLIN)
F018	2"C., 3#2, 1#8 GND.	(DUBLIN)
F019	¾"C., 4#12, 1#12 GND.	(DUBLIN)
F020	1"C., 2#8, 1#10 GND. & 2#14	(DUBLIN) FEEDER & SIGNAL CONDUCTORS
F021	¾"C., 4#12, 1#12 GND.	(GRAND-OTIS)
F022	2"C., 4#2, 1#8 GND.	UTILITY SERVICE (TIDEWAY)
F023	2"C., 4#2, 1#8 GND.	(TIDEWAY)
F024	2"C., 4#2, 1#8 GND.	(TIDEWAY)
F025	1"C., 3#12, 1#12 GND. & 2#14	(TIDEWAY) FEEDER & SIGNAL CONDUCTORS
F026	¾"C., 4#12, 1#12 GND.	(TIDEWAY)
F027	1"C., 3#6, 1#10 GND. & 2#14	(CATALINA) FEEDER & SIGNAL CONDUCTORS
F028	1"C., 4#12, 1#12 GND.	(CATALINA)
F029	1"C., 3#6, 1#10 GND. & 2#14	(CATALINA) FEEDER & SIGNAL CONDUCTORS
F030	1"C., 4#12, 1#12 GND.	(GRAND-OTIS)
F031	1"C., 2#8, 1#10 GND. & 2#14	(DUBLIN) FEEDER & SIGNAL CONDUCTORS
F032	2"C., 3#1/0, 1#6 GND. & 2#14	(PARK-OTIS) FEEDER & SIGNAL CONDUCTORS
F033	2"C., 3#1/0, 1#6 GND. & 2#14	(PARK-OTIS) FEEDER & SIGNAL CONDUCTORS
F034	1"C., 4#12, 1#12 GND.	(TIDEWAY)
F035	1"C., 3#12, 1#12 GND. & 2#14	(TIDEWAY) FEEDER & SIGNAL CONDUCTORS
S001	¾"C., 4#14	ATS GENERATOR SIGNAL (CATALINA)
S002	¾"C., 4#14	ATS GENERATOR SIGNAL (GRAND-OTIS)
S003	¾"C., 4#14	ATS GENERATOR SIGNAL (PARK-OTIS)
S004	¾"C., 4#14	ATS GENERATOR SIGNAL (TIDEWAY)
S005	¾"C., 4#14	ATS GENERATOR SIGNAL (DUBLIN)
S006	1"C. (2)	PRESSURE TRANS (CATALINA)
S007	1"C., 6#14	DRYWELL SIGNAL (CATALINA)
S008	¾"C., 2#12	WET WELL SIGNAL (DUBLIN)
S009	-NOT USED-	
S010	1½"C., (1)	SCADA ANTENNA (DUBLIN)
S011	1"C.O. (2)	PRESSURE TRANS (DUBLIN)
S012	1"C.O. (3)	FLOAT SWITCH (CATALINA)
S013	1"C., 6#14	DRYWELL SIGNAL (PARK-OTIS)
S014	1"C. (2)	PRESSURE TRANS (PARK-OTIS)
S015	1"C.O. (3)	FLOAT SWITCH (PARK-OTIS)
S016	1"C. (2)	PRESSURE TRANS (GRAND-OTIS)
S017	1"C.O. (3)	FLOAT SWITCH (GRAND-OTIS)
S018	1"C., 6#14	DRYWELL SIGNAL (GRAND-OTIS)
S019	1"C., 6#14	DRYWELL SIGNAL (TIDEWAY)
S020	1"C.O. (3)	FLOAT SWITCH (TIDEWAY)
S021	1"C. (2)	PRESSURE TRANS (TIDEWAY)
S022	¾"C., 2#14	SERVICE PEDESTAL INTRUSION ALARM TO CONTROL SECTION
S023	¾"C., 2#14	SERVICE PEDESTAL INTRUSION ALARM TO CONTROL SECTION
S024	¾"C., 2#14	SERVICE PEDESTAL INTRUSION ALARM TO CONTROL SECTION
S025	¾"C., 2#14	SERVICE PEDESTAL INTRUSION ALARM TO CONTROL SECTION
S026	¾"C., 2#14	SERVICE PEDESTAL INTRUSION ALARM TO CONTROL SECTION

SHEET NOTES

1. (N) CONDUIT WITH (E) ANTENNA CABLE REINSTALLED BY CONTRACTOR.
2. PRESSURE TRANSDUCER CABLE LENGTH AS REQUIRED FOR TRANSDUCER MOUNTING & CONNECTION; SEE CIVIL PLANS FOR MOUNTING HEIGHT.
3. FLOAT SWITCH CABLE LENGTH AS REQUIRED FOR FS MOUNTING & CONNECTION; SEE CIVIL PLANS FOR MOUNTING HEIGHT.

NO	REVISIONS	DATE	APPR
1			
2			
3			
4			
5			
6			
7			

REGISTERED PROFESSIONAL ENGINEER
THOMAS E. PINKERTON
No. 014906
Exp. 30 JUNE
ELECTRICAL
STATE OF CALIFORNIA

FEHR ENGINEERING COMPANY, INC.
CONSULTING ELECTRICAL ENGINEERS
FE JOB No. 1005.01
62-A HANGAR WAY
WATSONVILLE, CALIFORNIA 95076
PHONE: (831) 786-0373
FAX: (831) 786-8523
EMAIL: FEHR@FEHRINC.COM

CITY OF ALAMEDA
SEWER PUMP STATIONS BACKUP
GENERATOR INSTALLATION, PHASE 1
FEEDER SCHEDULE

DATE: 8/10/11
SCALE: AS SHOWN
DESIGN: C.L.
DRAWN: C.L.
CHECKED: T.P.

E3.2

DETAIL NOTES:

1. SEE PLANS FOR SITE SPECIFIC REQUIREMENTS; SEE DETAIL **2/E4.1**.
2. CABLE SUPPORT GRIP; HEAVY DUTY STAINLESS STEEL; OFFSET EYE SPLIT MESH; ROD CLOSING "KELLUMS" OR EQUAL.
3. SPLICE FEEDER WIRING TO PUMP POWER CABLE; USE HIGH COMPRESSION COPPER SPLICE; LONG BARREL; "BURNDY" HYLINK OR EQUAL; INSULATE USING COLD SHRINK BY 3-M.
4. EYS SEALING FITTING; SIZED FOR FEEDER CONDUIT; SEE SINGLE LINE DIAGRAM;
5. 2" PVC COATED GALVANIZED RIGID STEEL CONDUIT; ONE CONDUIT FOR EACH PUMP CORD.
6. PVC COATED GALVANIZED RIGID STEEL CONDUIT; 18" BEYOND CONCRETE PULLBOX; SEE SINGLE LINE DIAGRAM FOR FEEDER CONDUIT SIZE.
7. BELL ADAPTER SET FLUSH INTO GROUT OF WALL PENETRATION.
8. SECURE KELLUMS TO STRUCTURE OF WET WELL.
9. REMOVABLE ROTEX SEAL; CONDUIT PUDDY TO SEAL CONDUIT WATER TIGHT.
10. SEE CIVIL PLANS FOR EXACT WELL DEPTH.
11. POWER CIRCUIT SHOWN; SIGNAL CIRCUIT SIMILAR.
12. 6"± CRUSHED ROCK DRAIN BASE.

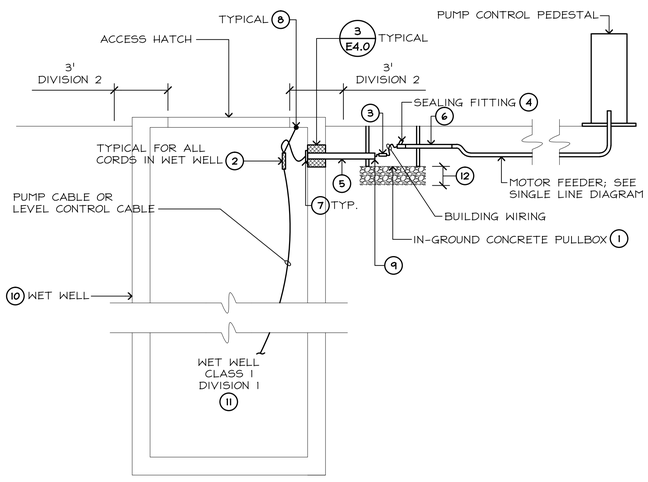

4 WET WELL POWER CONNECTION
NO SCALE

DETAIL NOTES:

1. SEE PLANS FOR SITE SPECIFIC REQUIREMENTS.
2. EXPLOSION PROOF RECEPTACLE WITH MATCHING PUMP CORD PLUG; ONE RECEPTACLE AND PLUG FOR EACH PUMP; CLASS I DIVISION 2 GROUP D; 3 POLE, 4 WIRE 600VAC, WITH 2 RELAYS; SEE SINGLE LINE DIAGRAM FOR AMPERE RATING AND SITE SPECIFIC REQUIREMENTS; VANTAGE TECHNOLOGY "XP" SERIES OR EQUAL.
3. SEE CIVIL PLANS FOR EXACT WELL DEPTH.
4. EYS SEALING FITTING; SIZED FOR FEEDER CONDUIT; SEE SINGLE LINE DIAGRAM; LOCATE FITTING WITHIN 18" OF DRY WELL CONDUIT EXITING.
5. PVC COATED GALVANIZED RIGID STEEL CONDUIT; SEE SINGLE LINE DIAGRAM FOR FEEDER CONDUIT SIZE.
6. POWER CIRCUIT SHOWN; SIGNAL CIRCUIT SIMILAR EXCEPT TERMINATE CIRCUIT DIRECTLY INTO SIGNAL DEVICE OR EQUIPMENT.
7. 18" MINIMUM.
8. SECURE KELLUMS TO STRUCTURE OF WET WELL.
9. SECURE CONDUIT TO DRY WELL STRUCTURE USING STAINLESS STEEL C-CHANNEL STRUT OR EQUAL.
10. 6"± CRUSHED ROCK DRAIN BASE.

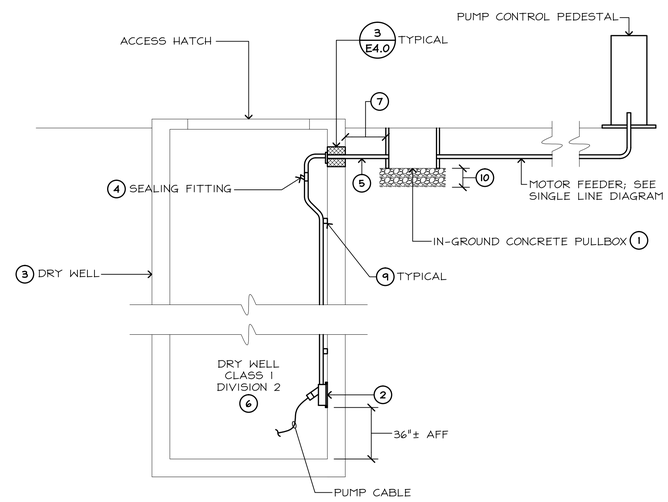

5 DRY WELL PUMP CONNECTION
NO SCALE

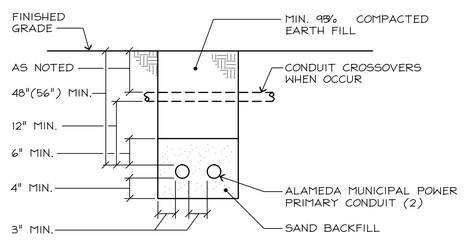

1 TRENCH SECTION (AMP)
NO SCALE

D625

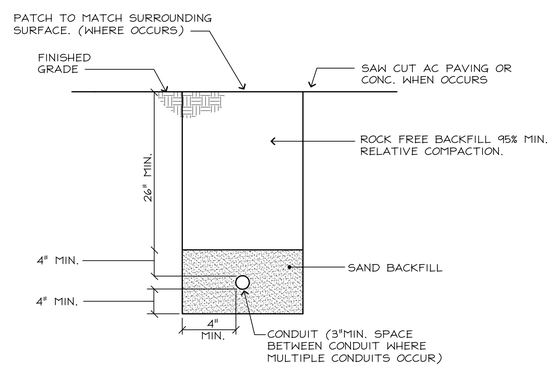

2 TRENCH SECTION (NON-AMP)
NO SCALE

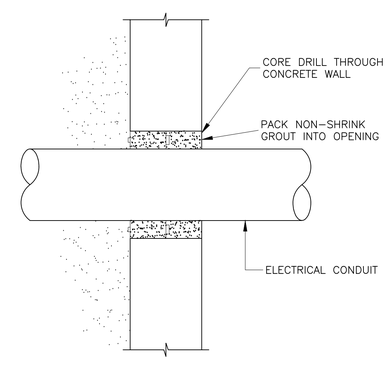

3 PIPE PENETRATION DETAIL
NO SCALE

NO	REVISIONS	DATE	APPR
1			
2			
3			
4			
5			
6			
7			

REGISTERED PROFESSIONAL ENGINEER
THOMAS E. PINKERTON
No. 014906
Exp. 30 JUNE 12
ELECTRICAL
STATE OF CALIFORNIA

FEHR ENGINEERING COMPANY, INC.
42-2-A HANGAR WAY
WATSONVILLE, CALIFORNIA 95076
PHONE: (831) 786-0373
FAX: (831) 786-8523
EMAIL: FEHR@FEHRENG.COM
CONSULTING ELECTRICAL ENGINEERS
FE JOB No. 10051.01

CITY OF ALAMEDA
SEWER PUMP STATIONS BACKUP GENERATOR INSTALLATION, PHASE 1
ELECTRICAL DETAILS

DATE: 8/10/11
SCALE: AS SHOWN
DESIGN: C.L.
DRAWN: C.L.
CHECKED: T.P.

E4.0

DETAIL NOTES:

1. EXPLOSION PROOF TUMBLER SWITCH RATED FOR CLASS 1, DIVISION 2 GROUP D HAZARDOUS LOCATION; "APPLETON" EFS TYPE OR EQUAL. MOUNT AT ACCESSIBLE LOCATION NEAR VAULT ENTRANCE.
2. MINIMUM SIZE 8"X10" EXPLOSION PROOF CONDUIT BOX RATED FOR CLASS 1, DIVISION 2 GROUP D HAZARDOUS LOCATIONS; SIZE BOX TO ACCOMMODATE CONNECTED EQUIPMENT; "APPLETON" GUBB TYPE OR EQUAL.
3. EXPLOSION PROOF SEALING FITTING RATED FOR CLASS 1, DIVISION 2 GROUP D HAZARDOUS LOCATIONS, "APPLETON" EYS TYPE OR EQUAL; MAXIMUM CONDUIT FILL 25% UNLESS OTHERWISE SPECIFIED; IF CONNECTING CONDUIT FILL IS GREATER THAN 25%, USE LARGER SIZED EYS FITTING WITH REDUCER FITTINGS AS NEEDED. FILL WITH COMPOUND AS SPECIFIED BY THE FITTING MANUFACTURER.
4. RECEPTACLE RATED FOR CLASS 1, DIVISION 2 GROUP D HAZARDOUS LOCATIONS; "APPLETON" U-LINE NI SERIES TYPE OR EQUAL. INCLUDING SUMP PUMP & OTHER CONVENIENCE RECEPTACLES;
5. SEAL NOT REQUIRED IF RECEPTACLE IS FACTORY SEALED.
6. CEILING MOUNTED, EXPLOSION PROOF LIGHT FIXTURE; SEE FIXTURE SCHEDULE AND PLANS.
7. PVC COATED GALVANIZED RIGID STEEL CONDUIT; SEE SINGLE LINE DIAGRAM FOR FEEDER CONDUIT SIZE.
8. 18" MINIMUM.
9. SEE PLANS FOR SITE SPECIFIC REQUIREMENTS.
10. POWER FEEDER TO PUMP CONTROL PEDESTAL; SEE SINGLE LINE DIAGRAM.
11. SECURE CONDUIT TO DRY WELL STRUCTURE USING STAINLESS STEEL C-CHANNEL STRUT OR EQUAL AND STAINLESS STEEL CONDUIT STRAPS.
12. EXPLOSION PROOF "T" FITTING TO OTHER RECEPTACLES WHERE OCCURS; CLASS 1 DIVISION 2 GROUP D RATED; "APPLETON" ER TYPE OR EQUAL.
13. 6"± CRUSHED ROCK DRAIN BED.

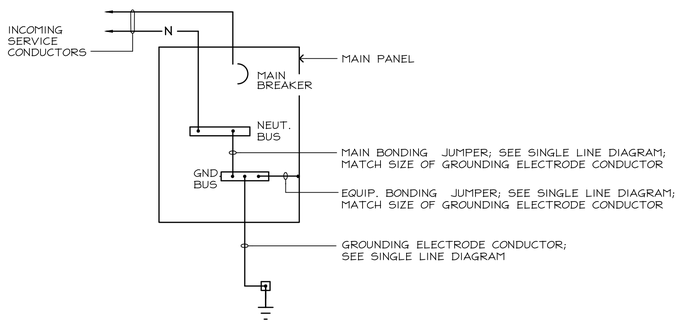

1 **MAIN PEDESTAL GROUNDING**
NO SCALE
D626A

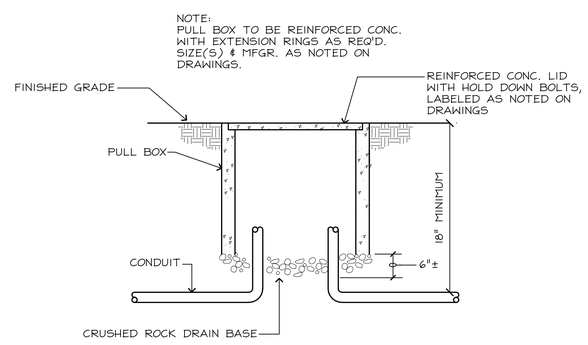

2 **PULL BOX**
NO SCALE
D209

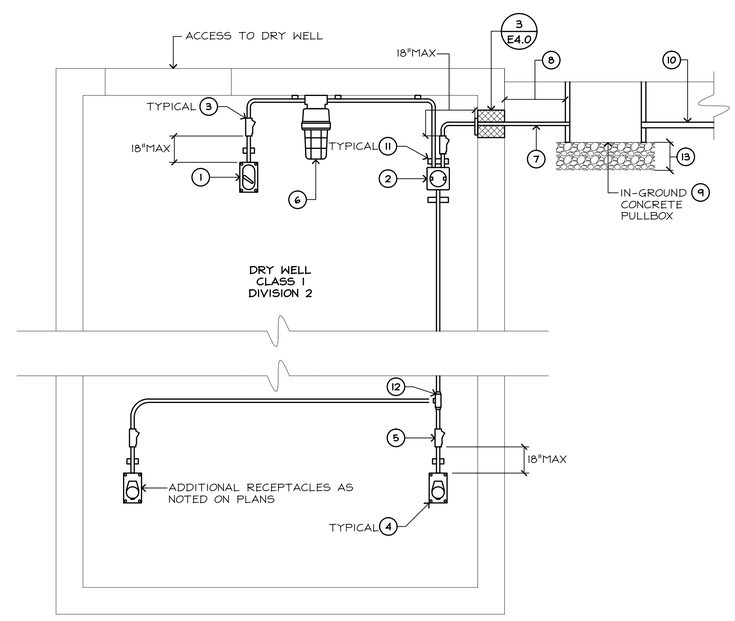

3 **DRY WELL POWER DISTRIBUTION SCHEMATIC**
NO SCALE

NO	REVISIONS	DATE	APPR
1			
2			
3			
4			
5			
6			
7			

REGISTERED PROFESSIONAL ENGINEER
THOMAS E. PINKERTON
014906
30 JUNE 2011
ELECTRICAL
STATE OF CALIFORNIA

FEHR ENGINEERING COMPANY, INC.
62-2A HANGAR WAY
WATSONVILLE, CALIFORNIA 95076
PHONE: (831) 786-0373
FAX: (831) 786-8523
EMAIL: FE@FEHRENGCOM
CONSULTING ELECTRICAL ENGINEERS
F.E. JOB No. 1005.01

CITY OF ALAMEDA
SEWER PUMP STATIONS BACKUP GENERATOR INSTALLATION, PHASE 1
ELECTRICAL DETAILS

DATE: 8/10/11
SCALE: AS SHOWN
DESIGN: C.L.
DRAWN: C.L.
CHECKED: T.P.

E4.1

LIGHT FIXTURE SCHEDULE

FIXTURES NOTES:

1. ALL FLUORESCENT LIGHT FIXTURE BALLASTS SHALL BE ELECTRONIC TYPE, 15% TOTAL HARMONIC DISTORTION MAX., "ADVANCE MARK V" OR MEGNATEK/UNIVERSAL "TRIAD" U.O.N.
2. ALL FLUORESCENT LIGHT FIXTURE LAMPS SHALL BE ENERGY SAVING 3500 K, 80 CRI MINIMUM, U.O.N.
3. ALL RECESSED INCANDESCENT LIGHT FIXTURES SHALL BE U.L APPROVED FOR ZERO CLEARANCE INSULATION COVER WHEN INSTALLED IN INSULATED CEILINGS.
4. ALL FLUORESCENT BALLASTS (AND ASSOC. FIXTS.) SHALL HAVE MANUFACTURER'S CERTIFICATION OF COMPLIANCE WITH CALIFORNIA ENERGY COMMISION STANDARDS.

TYPE	DESCRIPTION	LAMPS	MANUFACTURER
A	INCANDESCENT EXPLOSION PROOF FIXTURE; HAZARDOUS LOCATION RATED CLASS I DIV 2; WET LOCATION RATED; CEILING MOUNTED; EPOXY POWDER COAT FINISH; PORCELAIN LAMP SOCKET; HEAT AND IMPACT RESISTANT GLOBE; ALUMINUM GLOBE GUARDS; 120V OPERATION.	(1) 200W BULB.	**APPLETON ELECTRIC** CODE MASTER SERIES

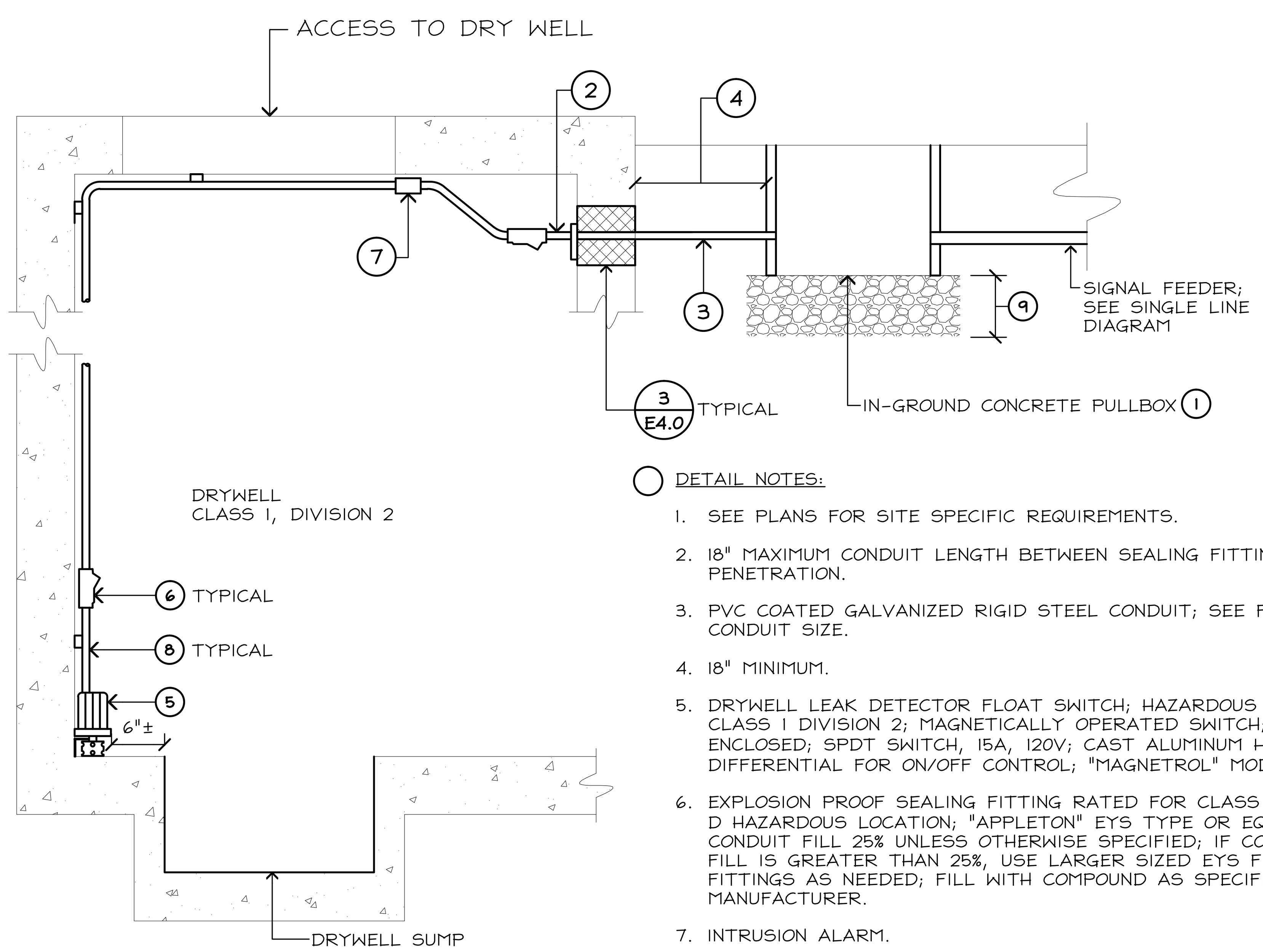

DETAIL NOTES:

1. SEE PLANS FOR SITE SPECIFIC REQUIREMENTS.
2. 18" MAXIMUM CONDUIT LENGTH BETWEEN SEALING FITTING AND DRY WELL PENETRATION.
3. PVC COATED GALVANIZED RIGID STEEL CONDUIT; SEE FEEDER SCHEDULE FOR CONDUIT SIZE.
4. 18" MINIMUM.
5. DRYWELL LEAK DETECTOR FLOAT SWITCH; HAZARDOUS LOCATION RATED CLASS I DIVISION 2; MAGNETICALLY OPERATED SWITCH; SWITCH COMPLETELY ENCLOSED; SPDT SWITCH, 15A, 120V; CAST ALUMINUM HOUSING; 3/4" LEVEL DIFFERENTIAL FOR ON/OFF CONTROL; "MAGNETROL" MODEL FLS.
6. EXPLOSION PROOF SEALING FITTING RATED FOR CLASS I, DIVISION 2, GROUP D HAZARDOUS LOCATION; "APPLETON" EYS TYPE OR EQUAL; MAXIMUM CONDUIT FILL 25% UNLESS OTHERWISE SPECIFIED; IF CONNECTING CONDUIT FILL IS GREATER THAN 25%, USE LARGER SIZED EYS FITTING WITH REDUCER FITTINGS AS NEEDED; FILL WITH COMPOUND AS SPECIFIED BY THE FITTING MANUFACTURER.
7. INTRUSION ALARM.
8. 18" MAXIMUM BETWEEN CONDUIT SEAL AND EQUIPMENT ENTRANCE.
9. 6"± CRUSHED ROCK DRAIN BASE.

1 LIFT STATION SIGNAL DISTRIBUTION

NO SCALE

D237

DETAIL NOTES:

1. 1 1/2"± HOLE WITH GROMMET FOR ANTENNA CABLE.
2. 3" GRS.
3. ANTENNA AND ANTENNA CABLE SALVAGED BY CONTRACTOR DURING DEMOLITION; REINSTALL ANTENNA & ANTENNA CABLE ON (N) ANTENNA MAST; CLAMP ANTENNA TO POLE.
4. 3" "T" TYPE NEC 8X MOGUL CONDUIT BODY; MALLEABLE IRON; ZINC ELECTROPLATE; NEMA 3R WITH GASKETS; STAINLESS STEEL HARDWARE.
5. ANTENNA CABLE TO SCADA RTU; COORDINATE WITH CITY FOR RTU INSTALLATION; RTU INSTALLATION IS BY CITY.
6. APPROXIMATE ANTENNA MOUNTING HEIGHT SHOWN ON PLANS; EXACT MOUNTING HEIGHT SHALL MATCH (E) ANTENNA MOUNTING HEIGHT; CONTRACTOR SHALL FIELD VERIFY EXACT MOUNTING HEIGHT.

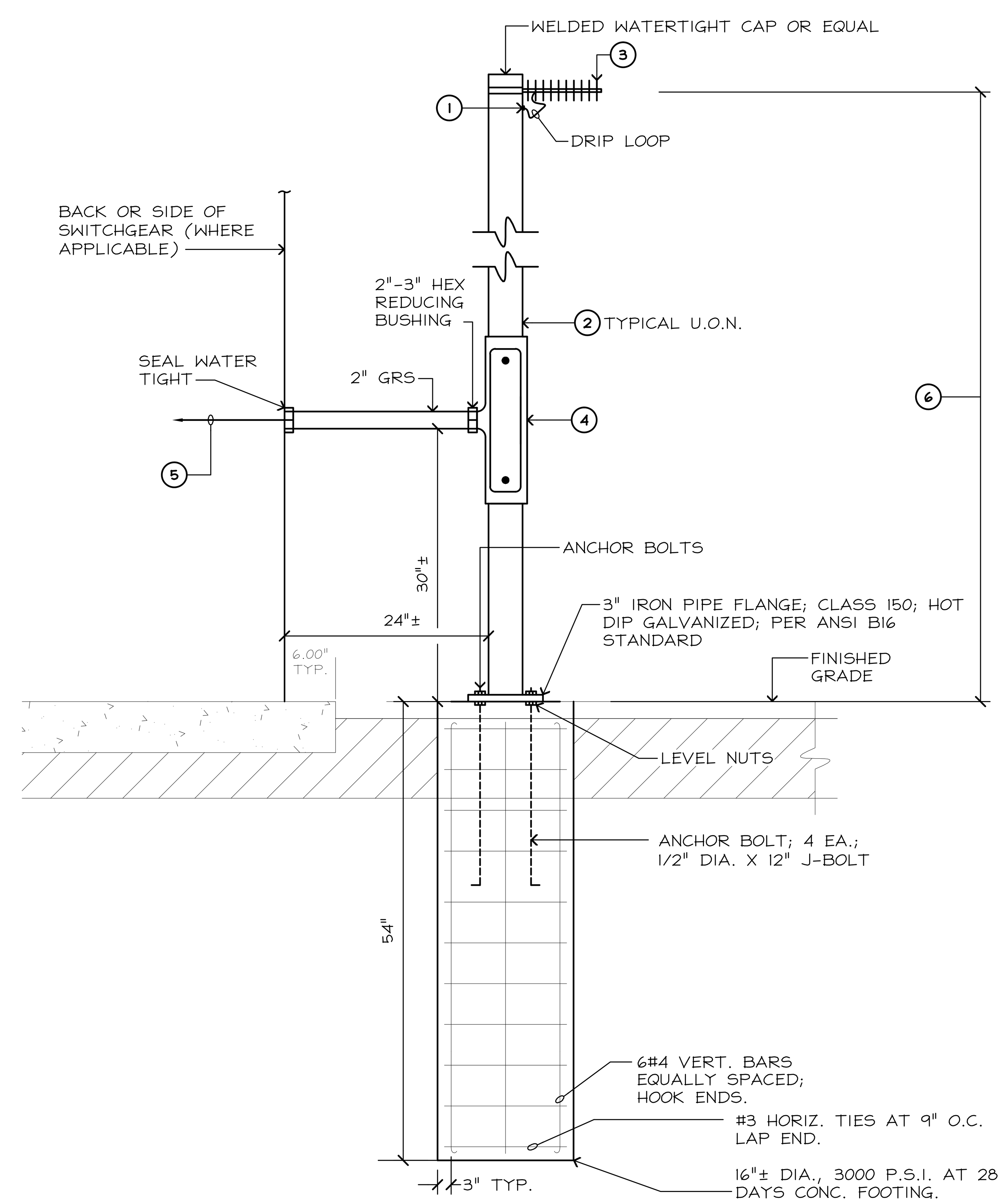

2 SCADA ANTENNA DETAIL

NO SCALE

NO	REVISIONS	DATE	APPR
1			
2			
3			
4			
5			
6			

REGISTERED PROFESSIONAL ENGINEER THOMAS E. PINKERTON No. 014906 EXP. 30 JUNE ELECTRICAL STATE OF CALIFORNIA

FEHR ENGINEERING COMPANY, INC.
62-A HANGAR WAY
WATSONVILLE, CALIFORNIA 95076
PHONE: (831) 786-0373
FAX: (831) 786-8523
EMAIL: FEC@FEHRINC.COM
CONSULTING ELECTRICAL ENGINEERS
FE JOB No. 10051.01

CITY OF ALAMEDA
SEWER PUMP STATIONS BACKUP GENERATOR INSTALLATION, PHASE 1
ELECTRICAL DETAILS

DATE: 8/10/11
SCALE: AS SHOWN
DESIGN: C.L.
DRAWN: C.L.
CHECKED: T.P.

E4.2

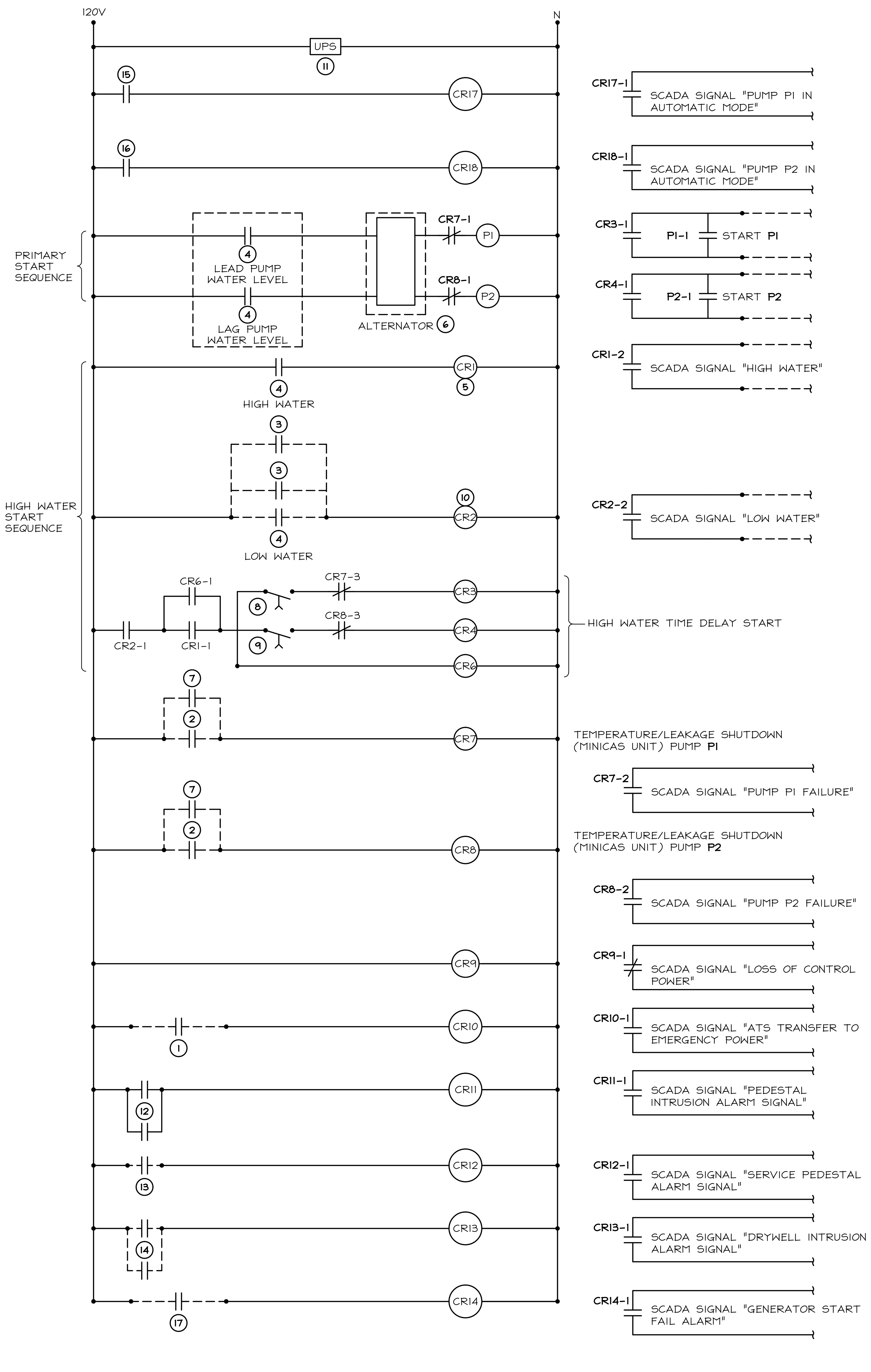

DETAIL NOTES:

1. N.O. CONTACT FROM ATS CLOSES UPON TRANSFER TO EMERGENCY POWER SOURCE.
2. LEAKAGE RELAY FROM MINICAS UNIT; PUMP AS NOTED.
3. HAND MODE RELAY FROM HOA SWITCH TO SIGNAL BYPASS LOW LEVEL SHUTDOWN CIRCUIT; PROVIDE HAND MODE BYPASS FROM EACH STARTER.
4. N.O. CONTACT FROM PLC CONTROLLED BY PRESSURE TRANSMITTER; CLOSE UPON WATER REACHING DESIGNATED LEVEL; DESIGNATED LEVELS SET PER CIVIL ENGINEERS PLAN; ELECTRICAL CONTRACTOR SHALL ADJUST LEVEL SETTINGS PER CIVIL PLANS.
5. UPON HIGH WATER ALARM; ALL PUMPING IS CALLED AND SCADA SIGNAL SENT.
6. ALTERNATOR; CALLS LEAD PUMP, THEN CALLS LAG PUMP; AUTOMATICALLY ROTATES START SEQUENCE; WHEN CALLED TO STOP PUMPING LEAD PUMP IS SHUT DOWN FIRST; LAG PUMP IS SHUTDOWN SECOND.
7. TEMPERATURE RELAY FROM MINICAS UNIT; PUMP AS NOTED.
8. TIME DELAY ADJUSTABLE FROM 0-180 SECONDS SET AT 0 SECONDS.
9. TIME DELAY ADJUSTABLE FROM 0-180 SECONDS SET AT 60 SECONDS.
10. AT LOW WATER LEVEL, PUMP CONTROLS ARE ACTIVATED AND REMAIN ACTIVATED UNTIL LOW WATER RELAY OPENS.
11. UPS; 120V INPUT/120V OUTPUT; MAINTENANCE FREE SEALED LEAD ACID WITH SUSPENDED ELECTROLYTE, LEAK PROOF, SIZE BATTERY FOR FIVE MINUTES FULL CONNECT LOAD RUN TIME; BATTERY CHARGER; PROVIDE LOW BATTERY SIGNAL RELAY TO NOTIFY SCADA.
12. N.O. CONTACTS FROM INTRUSION ALARMS AT EACH PEDESTAL DOORS; NUMBER OF DEVICES PER PLANS; CONNECT EACH DEVICE IN PARALLEL; ALARM IS SENT UPON ANY DOOR OPENING.
13. N.O. CONTACT FROM INTRUSION ALARM AT SERVICE PEDESTAL DOOR WHERE APPLICABLE; ALARM IS SENT UPON DOOR OPENING.
14. N.O. CONTACTS FROM INTRUSION ALARMS AT DRYWELL DOORS; NUMBER OF DEVICES PER PLANS; CONNECT EACH DEVICE IN PARALLEL; ALARM IS SENT UPON ANY DOOR OPENING; PROVIDE TERMINAL BLOCKS TO CONNECT UP TO 10 PARALLEL DEVICES.
15. N.O. CONTACT FROM PUMP **P1** HOA SWITCH; HOA SWITCH IN "AUTOMATIC" POSITION.
16. N.O. CONTACT FROM PUMP **P2** HOA SWITCH; HOA SWITCH IN "AUTOMATIC" POSITION.
17. N.O. CONTACT FROM GENERATOR; CLOSES UPON GENERATOR FAILURE TO START; SEE ELECTRICAL SPECIFICATION.

1 SCHEMATIC CONTROL DIAGRAM (PRIMARY)

NO SCALE

DETAIL NOTES:

1. TIME DELAY ADJUSTABLE FROM 0-180 SECONDS SET AT 0 SECONDS.
2. TIME DELAY ADJUSTABLE FROM 0-180 SECONDS SET AT 180 SECONDS.
3. UPS; 120V INPUT/120V OUTPUT; MAINTENANCE FREE SEALED LEAD ACID WITH SUSPENDED ELECTROLYTE, LEAK PROOF, SIZE BATTERY FOR FIVE MINUTES FULL CONNECT LOAD RUN TIME; BATTERY CHARGER; PROVIDE LOW BATTERY SIGNAL RELAY TO NOTIFY SCADA.

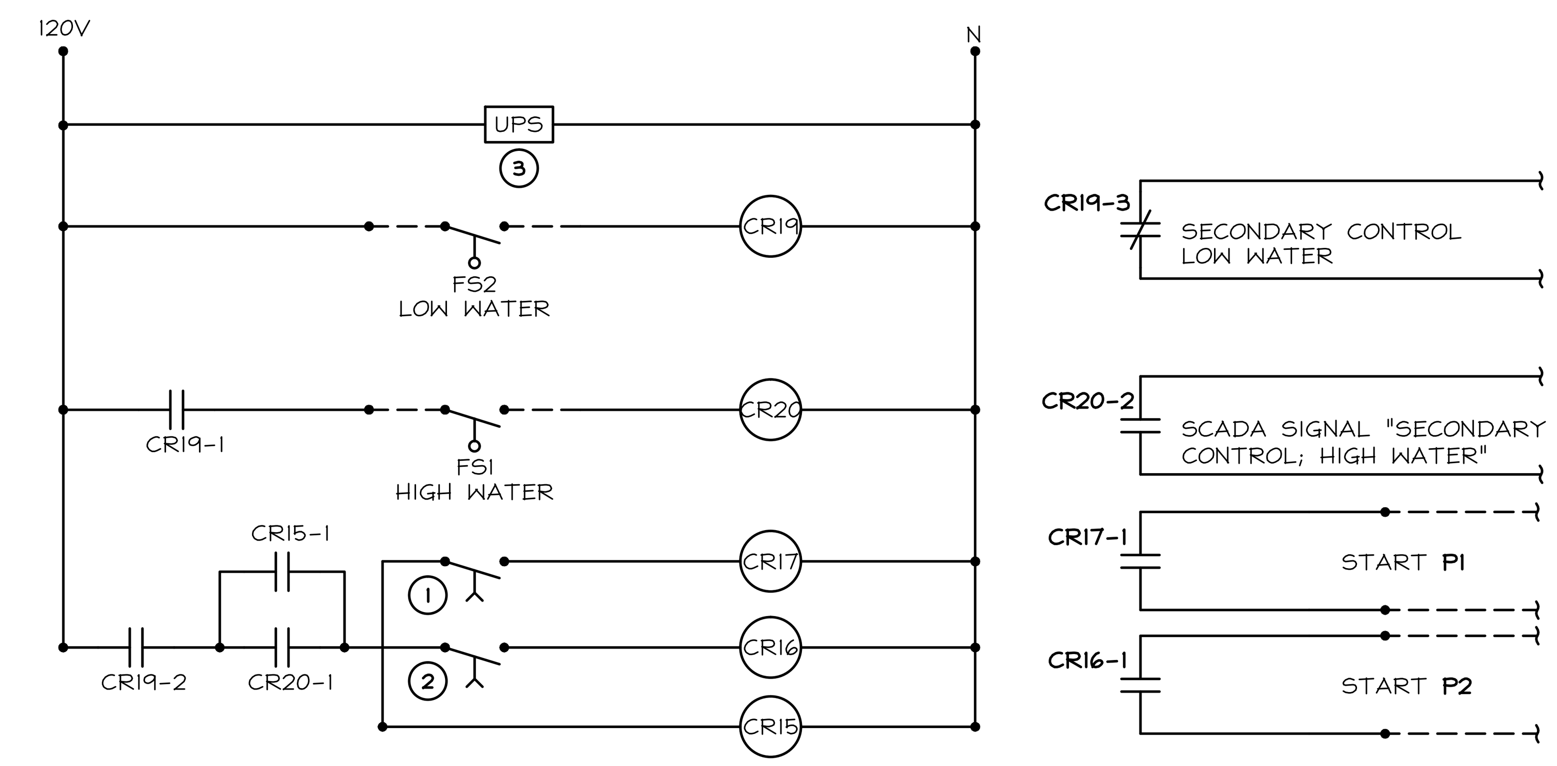

3 SCHEMATIC CONTROL DIAGRAM (SECONDARY)

NO SCALE

DETAIL NOTES:

1. FLOAT SWITCH CABLE PART OF FLOAT SWITCH ASSEMBLY; COORDINATE CABLE LENGTH WITH VENDOR; CABLE TERMINATES IN PUMP CONTROL PEDESTAL.
2. PRESSURE TRANSMITTER CABLE PART OF PRESSURE TRANSMITTER; COORDINATE CABLE LENGTH WITH VENDOR; CABLE TERMINATES IN PUMP CONTROL PEDESTAL.
3. MINI CAS SIGNAL CONDUCTORS PART OF MOTOR POWER CABLE; SIGNAL CONDUCTORS SPLICED IN CONCRETE PULLBOX SEE PLAN.
4. CONDUCTORS TO MINI CAS EQUIPMENT SEE PLAN.
5. INDEPENDENT REDUNDANT CONTROLS; SEE DETAIL **3/E5.0**.

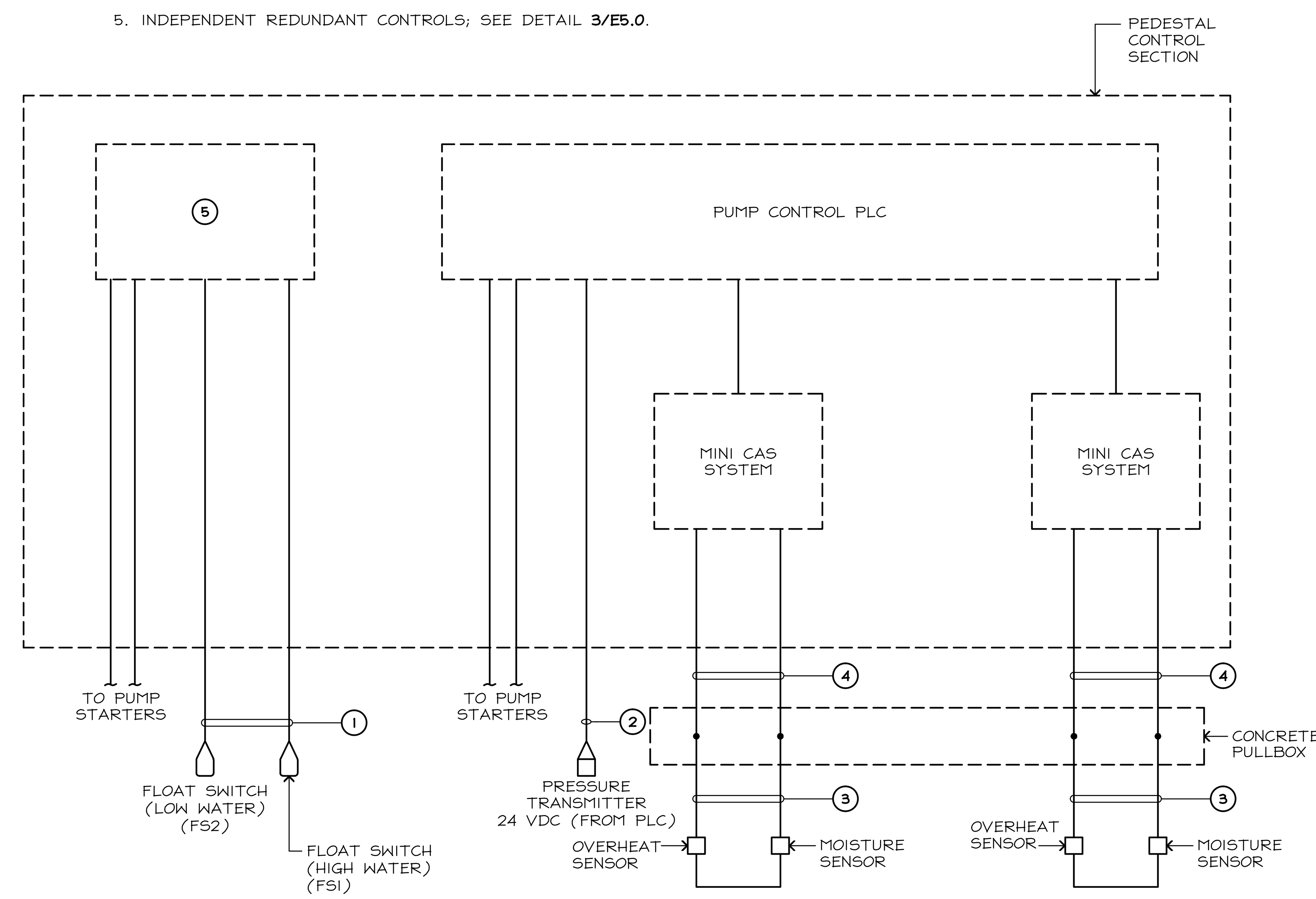

2 CONTROL SYSTEM BLOCK DIAGRAM

NO SCALE

NO	REVISIONS	DATE	APPR
1			
2			
3			
4			
5			
6			

REGISTERED PROFESSIONAL ENGINEER
THOMAS E. PINKERTON
No. 014906
Exp. 30 JUNE
ELECTRICAL
STATE OF CALIFORNIA

FEHR ENGINEERING COMPANY, INC.
62-A HANGAR WAY
WATSONVILLE, CALIFORNIA 95076
PHONE: (831) 786-0373
FAX: (831) 786-8523
EMAIL: FEC@FEHRINC.COM
CONSULTING ELECTRICAL ENGINEERS
FE JOB No. 10051.01

CITY OF ALAMEDA
SEWER PUMP STATIONS BACKUP GENERATOR INSTALLATION, PHASE 1
CONTROL DIAGRAM

DATE:	8/10/11
SCALE:	AS SHOWN
DESIGN:	C.L.
DRAWN:	C.L.
CHECKED:	T.P.

E5.0